2002

HONDA

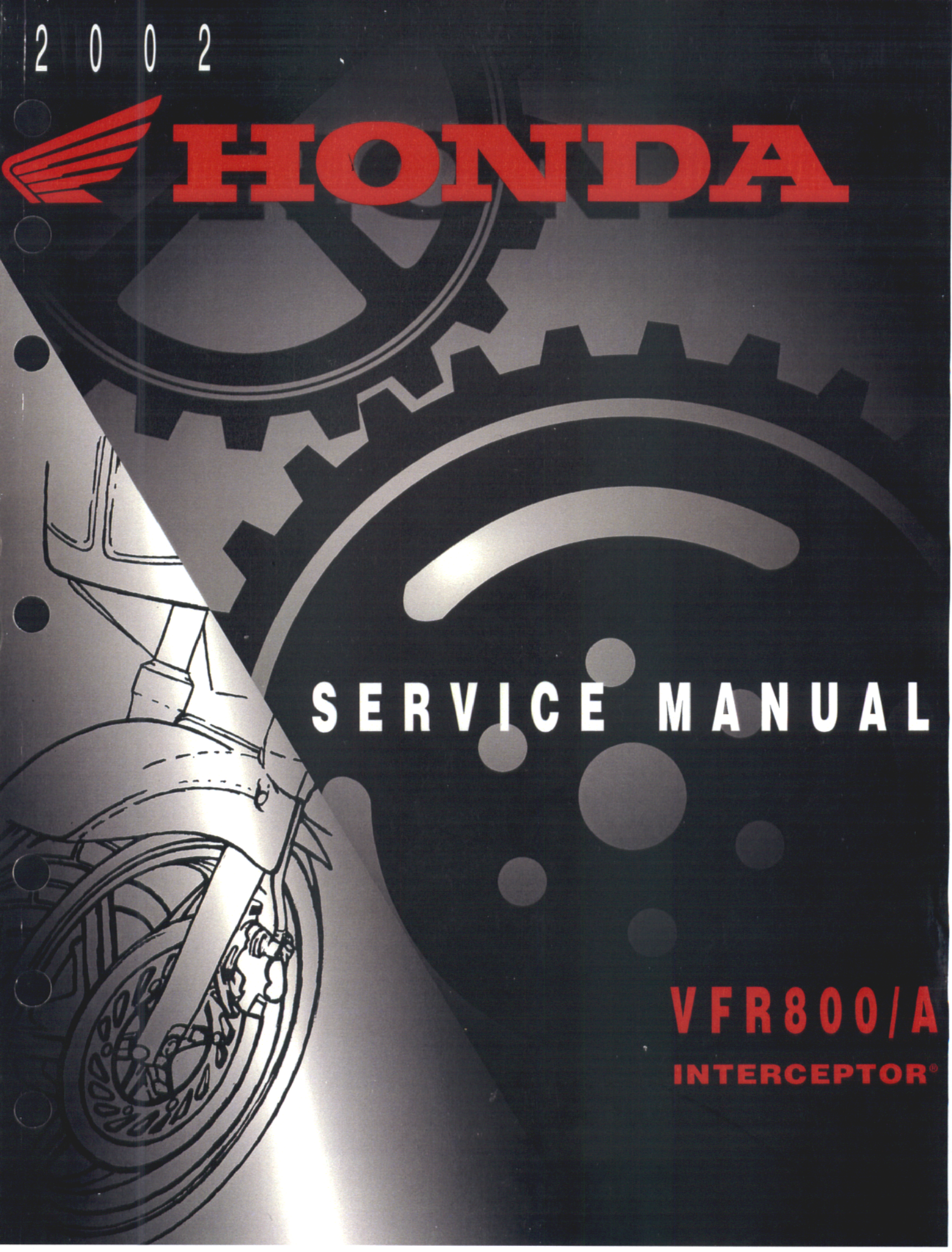

SERVICE MANUAL

VFR800/A

INTERCEPTOR®

HOW TO USE THIS MANUAL

This service manual describes the service procedures for the VFR/VFR-ABS.

Follow the Maintenance Schedule (Section 3) recommendations to ensure that the vehicle is in peak operating condition and emission levels are within the standards set by the U.S. Environmental Protection Agency, California Air Resources Board and Transport Canada.

Performing the first scheduled maintenance is very important. It compensates for the initial wear that occurs during the break-in period.

Sections 1 and 3 apply to the whole motorcycle. Section 2 illustrates procedures for removal/installation of components that may be required to perform service described in the following sections.
Section 4 through 20 describe parts of the motorcycle, grouped according to location.

Find the section you want on this page, then turn to the table of contents on the first page of the section.

Most sections start with an assembly or system illustration, service information and troubleshooting for the section. The subsequent pages give detailed procedure.

If you are not familiar with this motorcycle, read Technical Feature in Section 22.
If you don't know the source of the trouble, go to section 23 Troubleshooting.

Your safety, and the safety of others, is very important. To help you make informed decisions we have provided safety messages and other information throughout this manual. Of course, it is not practical or possible to warn you about all the hazards associated with servicing this vehicle. You must use your own good judgement. You will find important safety information in a variety of forms including:

- Safety Labels – on the vehicle
- Safety Messages – preceded by a safety alert symbol ⚠ and one of three signal words, DANGER, WARNING, or CAUTION. These signal words mean:

⚠DANGER You WILL be KILLED or SERIOUSLY HURT if you don't follow instructions.

⚠WARNING You CAN be KILLED or SERIOUSLY HURT if you don't follow instructions.

⚠CAUTION You CAN be HURT if you don't follow instructions.

- Instructions – how to service this vehicle correctly and safely.

As you read this manual, you will find information that is preceded by a NOTICE symbol. The purpose of this message is to help prevent damage to your vehicle, other property, or the environment.

CONTENTS

	GENERAL INFORMATION	1
	FRAME/BODY PANELS/EXHAUST SYSTEM	2
	MAINTENANCE	3
ENGINE AND DRIVE TRAIN	LUBRICATION SYSTEM	4
	FUEL SYSTEM (Programmed Fuel Injection)	5
	COOLING SYSTEM	6
	ENGINE REMOVAL/INSTALLATION	7
	CYLINDER HEAD/VALVES	8
	CLUTCH	9
	GEARSHIFT LINKAGE	10
	CRANKCASE/TRANSMISSION	11
	CRANKSHAFT/PISTON/CYLINDER	12
CHASSIS	FRONT WHEEL/SUSPENSION/ STEERING	13
	REAR WHEEL/SUSPENSION	14
	HYDRAULIC BRAKE	15
	ANTI-LOCK BRAKE SYSTEM (ABS)	16
ELECTRICAL	BATTERY/CHARGING SYSTEM	17
	IGNITION SYSTEM	18
	ELECTRIC STARTER/STARTER CLUTCH	19
	LIGHTS/METERS/SWITCHES	20
	WIRING DIAGRAMS	21
	TECHNICAL FEATURE	22
	TROUBLESHOOTING	23
	INDEX	24

SYMBOLS

The symbols used throughout this manual show specific service procedures. If supplementary information is required pertaining to these symbols, it would be explained specifically in the text without the use of the symbols.

	Replace the part(s) with new one(s) before assembly.
	Use recommended engine oil, unless otherwise specified.
	Use molybdenum oil solution (mixture of the engine oil and molybdenum grease in a ratio of 1:1)
	Use multi-purpose grease (Lithium based multi-purpose grease NLGI #2 or equivalent
	Use molybdenum disulfide grease (containing more than 3% molybdenum disulfide, NLGI #2 or equivalent. Example: Molykote® BR-2 plus manufactured by Dow Corning U.S.A. Multi-purpose M-2 manufactured by Mitsubishi Oil, Japan
	Use molybdenum disulfide paste (containing more than 40% molybdenum disulfide, NLGI #2 or equivalent. Example: Molykote® G-n Paste manufactured by Dow Corning U.S.A. Honda Moly 60 (U.S.A. only) Rocol ASP manufactured by Rocol Limited, U.K. Rocol Paste manufactured by Sumico Lubricant, Japan
	Use silicone grease.
	Apply a locking agent. Use a medium strength locking agent unless otherwise specified.
	Use sealant.
	Use DOT 4 brake fluid. Use the recommended brake fluid unless otherwise specified.
	Use fork or suspension fluid.

1. GENERAL INFORMATION

SERVICE RULES 1-2

MODEL IDENTIFICATION 1-2

GENERAL SPECIFICATIONS 1-4

LUBRICATION SYSTEM SPECIFICATIONS 1-6

FUEL SYSTEM (Programmed Fuel Injection) SPECIFICATIONS 1-6

COOLING SYSTEM SPECIFICATIONS 1-6

CYLINDER HEAD/VALVES SPECIFICATIONS 1-7

CLUTCH SPECIFICATIONS 1-7

CRANKCASE/TRANSMISSION SPECIFICATIONS 1-8

CRANKSHAFT/PISTON/CYLINDER SPECIFICATIONS 1-8

FRONT WHEEL/SUSPENSION/STEERING SPECIFICATIONS 1-9

REAR WHEEL/SUSPENSION SPECIFICATIONS 1-9

HYDRAULIC BRAKE SPECIFICATIONS 1-10

BATTERY/CHARGING SYSTEM SPECIFICATIONS 1-10

IGNITION SYSTEM SPECIFICATIONS 1-10

ELECTRIC STARTER/STARTER CLUTCH SPECIFICATIONS 1-11

LIGHTS/METERS/SWITCHES SPECIFICATIONS 1-11

STANDARD TORQUE VALUES 1-12

ENGINE & FRAME TORQUE VALUES 1-12

TOOLS 1-19

LUBRICATION & SEAL POINTS 1-21

CABLE & HARNESS ROUTING 1-25

EMISSION CONTROL SYSTEMS 1-42

EMISSION CONTROL INFORMATION LABELS (U.S.A. ONLY) 1-45

SERVICE RULES

1. Use genuine Honda or Honda-recommended parts and lubricants or their equivalents. Parts that don't meet Honda's design specifications may cause damage to the motorcycle.
2. Use the special tools designed for this product to avoid damage and incorrect assembly.
3. Use only metric tools when servicing the motorcycle. Metric bolts, nuts and screws are not interchangeable with English fasteners.
4. Install new gaskets, O-rings, cotter pins, and lock plates when reassembling.
5. When tightening bolts or nuts, begin with the larger diameter or inner bolt first. Then tighten to the specified torque diagonally in incremental steps unless a particular sequence is specified.
6. Clean parts in cleaning solvent upon disassembly. Lubricate any sliding surfaces before reassembly.
7. After reassembly, check all parts for proper installation and operation.
8. Route all electrical wires as show in the Cable and Harness Routing (page 1-25).

MODEL IDENTIFICATION

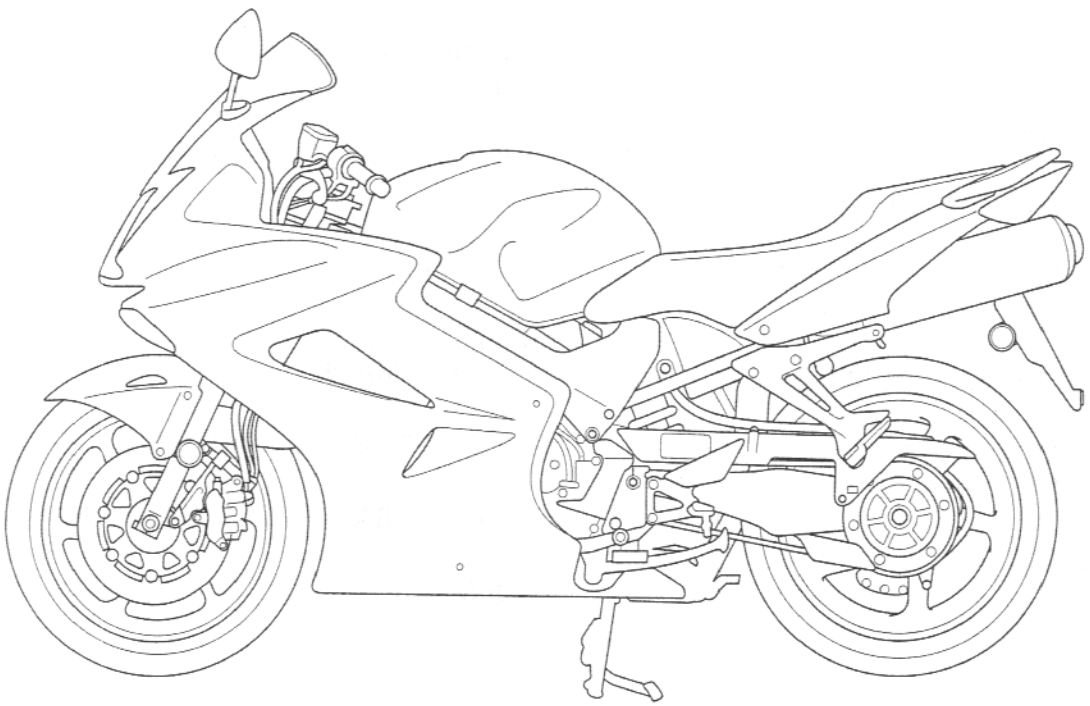

The frame serial number is stamped on the right side of the steering head.

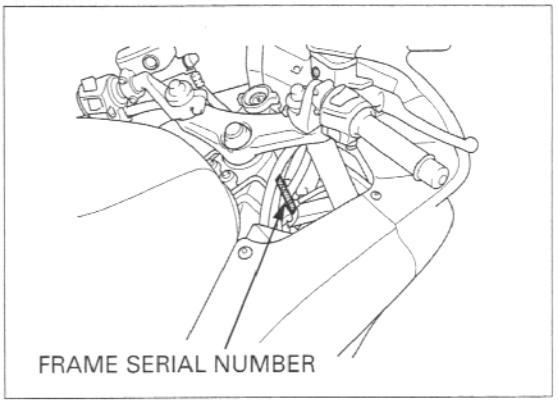

The engine serial number is stamped on the lower left side of the cylinder block.

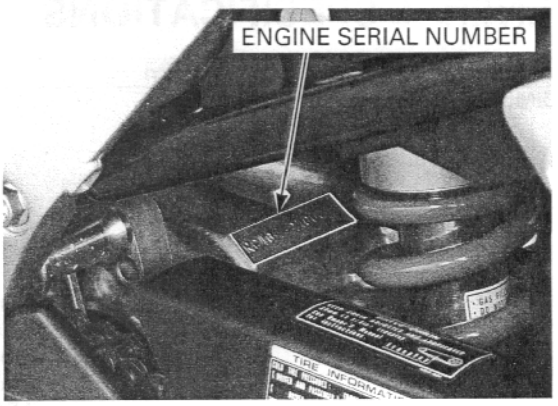

The Vehicle identification Number (VIN) is located on left side of the main frame on the Safety Certification Labels.

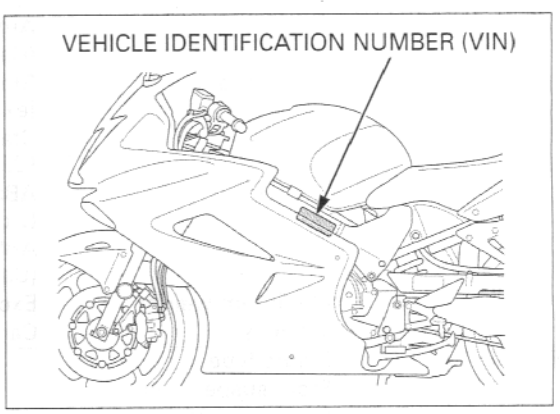

The throttle body identification number is stamped on the front side of the throttle body as shown.

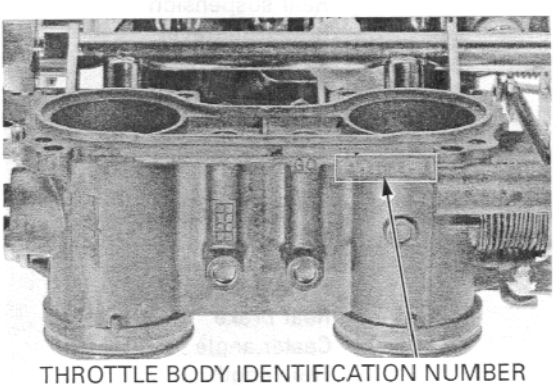

The color label is attached as shown. When ordering color-coded parts, always specify the designated color code.

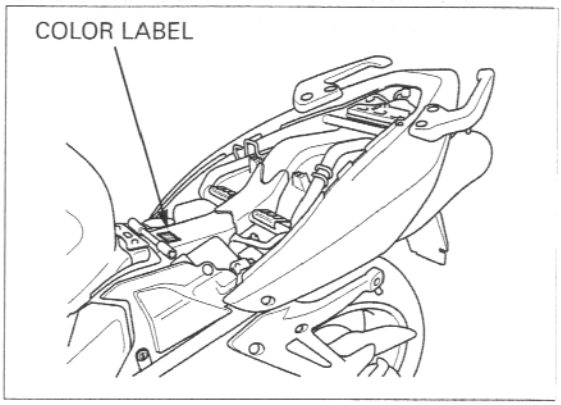

GENERAL SPECIFICATIONS

ITEM			SPECIFICATIONS
DIMENSIONS	Overall length		2,120 mm (83.5 in)
	Overall width		735 mm (28.9 in)
	Overall height		1,195 mm (47.0 in)
	Wheelbase		1,460 mm (57.5 in)
	Seat height		805 mm (31.7 in)
	Footpeg height		349 mm (13.7 in)
	Ground clearance		125 mm (4.9 in)
	Dry weight	Standard type (except california type)	213 kg (470 lbs)
		Standard type (California type)	214 kg (472 lbs)
		ABS type (except california type)	218 kg (481 lbs)
		ABS type (California type)	219 kg (483 lbs)
	Curb weight	Standard type (except california type)	244 kg (538 lbs)
		Standard type (California type)	245 kg (540 lbs)
		ABS type (except california type)	249 kg (549 lbs)
		ABS type (California type)	250 kg (551 lbs)
	Maximum weight capacity	Except canada type	181 kg (399 lbs)
		Canada type	185 kg (408 lbs)
FRAME	Frame type		Diamond
	Front suspension		Telescopic fork
	Front axle travel		120 mm (4.8 in)
	Rear suspension		Swingarm
	Rear axle travel		120 mm (4.72 in)
	Front tire size		120/70 ZR 17 M/C (58W)
	Rear tire size		180/55 ZR 17 M/C (73W)
	Front tire brand		BT020F BB (Bridgestone) D204FK (Dunlop) MEZ4A FRONT (Metzeler)
	Rear tire brand		BT020R BB (Bridgestone) D204K (Dunlop) MEZ4A (Metzeler)
	Front brake		Hydraulic double disc
	Rear brake		Hydraulic single disc
	Caster angle		25.5°
	Trail length		95 mm (3.7 in)
	Fuel tank capacity		22.0 liter (5.81 US gal, 4.84 Imp gal)

ITEM			SPECIFICATIONS
ENGINE	Cylinder arrangement		90° V
	Bore and stroke		72.0 X 48.0 mm (2.83 X 1.89 in)
	Displacement		782 cm^3 (47.7 cu-in)
	Compression ratio		11.6 : 1
	Valve train		Chain driven, DOHC with VTEC
	Intake valve opens	at 1 mm (0.04 in) lift	12° BTDC
	closes	at 1 mm (0.04 in) lift	33° ABDC
	Exhaust valve opens	at 1 mm (0.04 in) lift	35° BBDC
	closes	at 1 mm (0.04 in) lift	10° ATDC
	Lubrication system		Forced pressure and wet sump
	Oil pump type		Trochoid
	Cooling system		Liquid cooled
	Air filtration		Oiled paper element
	Engine dry weight		72.4 kg (159.6 lbs)
	Firing order		No.1 - 180° - No.3 - 270° - No.2 - 180° - No.4- 90° - No.1
FUEL DELIVERY SYSTEM	Type		PGM-FI (Programmed Fuel Injection)
	Throttle bore		36 mm (1.4 in)
DRIVE TRAIN	Clutch system		Multi-plate, wet
	Clutch operation system		Hydraulic operating
	Transmission		Constant mesh, 6-speeds
	Primary reduction		1.939 (64/33)
	Final reduction		2.687 (43/16)
	Gear ratio	1st	2.846 (37/13)
		2nd	2.062 (33/16)
		3rd	1.578 (30/19)
		4th	1.291 (31/24)
		5th	1.111 (30/27)
		6th	0.965 (28/29)
	Gearshift pattern		Left foot operated return system, 1 - N - 2 - 3 - 4 - 5 - 6
ELECTRICAL	Ignition system		Computer-controlled digital transistorized with electric advance
	Starting system		Electric starter motor
	Charging system		Triple phase output alternator
	Regulator/rectifier		SCR shorted/triple phase, full wave rectification
	Lighting system		Battery

LUBRICATION SYSTEM SPECIFICATIONS

Unit: mm (in)

ITEM			STANDARD	SERVICE LIMIT
Engine oil capacity	After draining		2.9 liter (3.1 US qt, 2.6 Imp qt)	–
	After draining/filter change		3.1 liter (3.3 US qt, 2.7 Imp qt)	–
	After disassembly		3.8 liter (4.0 US qt, 3.3 Imp qt)	–
Recommended engine oil			HONDA GN4 or HP4 (Without Moly) 4-stroke oil (U.S.A. and Canada) or Honda 4-stroke oil (Canada only), or equivalent motor oil API service classification SF, SG or Higher JASO 4T service classification: MA Viscosity: SAE 10W-40	–
Oil pressure at oil pressure switch			490 kPa (5.0 kgf/cm^2, 71 psi) at 6,000 rpm/(80°C/176°F)	–
Oil pump rotor	Feed pump	Tip clearance	0.15 (0.006)	0.20 (0.008)
		Body clearance	0.15 – 0.21 (0.006 – 0.008)	0.35 (0.014)
		Side clearance	0.02 – 0.09 (0.001 – 0.004)	0.10 (0.004)
	Cooler pump	Tip clearance	0.15 (0.006)	0.20 (0.008)
		Body clearance	0.15 – 0.22 (0.006 – 0.009)	0.35 (0.014)
		Side clearance	0.020 – 0.075 (0.0008 – 0.0295)	0.10 (0.004)

FUEL SYSTEM (Programmed Fuel Injection) SPECIFICATIONS

ITEM		SPECIFICATIONS
Throttle body identification number	Except California type	GQ33D
	California type	GQ33B
Starter valve vacuum difference		20mm Hg
Base throttle valve for synchronization		No.4
Idle speed		1,200 ± 100 rpm
Throttle grip free play		2 – 6 mm (1/16 – 1/4 in)
Intake air temperature sensor resistance (at 20°C/68°F)		1 – 4 kΩ
Engine coolant temperature sensor resistance (at 20°C/68°F)		2.3 – 2.6 Ω
Fuel injector resistance (at 20°C/68°F)		10.5 – 14.5 Ω
Bypass solenoid valve resistance (at 20°C/68°F)		28 – 32 Ω
PAIR solenoid valve resistance (at 20°C/68°F)		20 – 24 Ω
Purge control solenoid valve resistance (at 20°C/68°F)		30 – 34 Ω
Cam pulse generator peak voltage (at 20°C/68°F)		0.7 V minimum
Ignition pulse generator peak voltage (at 20°C/68°F)		0.7 V minimum
Manifold absolute pressure at idle		200 – 250 mm Hg
Fuel pressure at idle		250 kPa (2.5 kgf/cm^2, 36 psi)
Fuel pump flow (at 12V)		150 cm^3 (5.0 US oz, 5.3 Imp oz) minimum/10 seconds

COOLING SYSTEM SPECIFICATIONS

ITEM		SPECIFICATIONS
Coolant capacity	Radiator and engine	2.92 liter (3.08 US qt, 2.57 Imp qt)
	Reserve tank	0.9 liter (0.95 US qt, 0.79 Imp qt)
Radiator cap relief pressure		108 – 137 kPa (1.1 – 1.4 kgf/cm^2, 16 – 20 psi)
Thermostat	Begin to open	80 – 84 °C (176 – 183 °F)
	Fully open	95 °C (203 °F)
	Valve lift	8 mm (0.3 in) minimum
Recommended antifreeze		High quality ethylene glycol antifreeze containing corrosion protection inhibitors
Standard coolant concentration		50 % mixture with soft water

CYLINDER HEAD/VALVES SPECIFICATIONS

Unit: mm (in)

ITEM			STANDARD	SERVICE LIMIT
Cylinder compression			981 – 1,373 kPa (10.0 – 14.0 kgf/cm², 142 – 178 psi) at 300 rpm	–
Valve clearance	Normal side	IN	0.20 ± 0.03 (0.008 ± 0.001)	–
		EX	0.35 ± 0.03 (0.013 ± 0.001)	–
	VTEC side	IN	0.20 ± 0.08 (0.008 ± 0.003)	–
		EX	0.35 ± 0.08 (0.013 ± 0.003)	–
Camshaft	Cam lobe height	IN	36.36 – 36.44 (1.431 – 1.435)	36.33 (1.430)
		EX	35.31 – 35.39 (1.390 – 1.393)	35.28 (1.389)
	Runout		–	0.05 (0.002)
	Oil clearance		0.020 – 0.062 (0.0008 – 0.0024)	0.10 (0.004)
Valve lifter	Valve lifter O.D.		25.978 – 25.993 (1.0228 – 1.0233)	25.97 (1.022)
	Valve lifter bore I.D.		26.010 – 26.026 (1.024 – 1.0246)	26.04 (1.025)
Valve, valve guide	Valve stem O.D.	IN	4.475 – 4.490 (0.1762 – 0.1768)	4.465 (0.1758)
		EX	4.465 – 4.480 (0.1758 – 0.1764)	4.455 (0.1754)
	Valve guide I.D.	IN/EX	4.500 – 4.512 (0.1772 – 0.1776)	4.540 (0.1787)
	Stem-to-guide clearance	IN	0.010 – 0.037 (0.0004 – 0.0015)	0.075 (0.0030)
		EX	0.020 – 0.047 (0.0008 – 0.0019)	0.085 (0.0033)
	Valve guide projection above cylinder head	Normal side	12.15 – 12.50 (0.478 – 0.492)	–
		VTEC side	19.65 – 20.00 (0.774 – 0.787)	–
	Valve seat width	IN/EX	0.90 – 1.10 (0.035 – 0.043)	1.5 (0.06)
Valve spring free length	Spring A outer		42.3 (1.67)	41.5 (1.63)
	Spring B outer		54.3 (2.14)	53.2 (2.09)
	Spring A inner		39.8 (1.57)	39.0 (1.54)
	Spring B inner		39.1 (1.54)	38.3 (1.51)
Cylinder head warpage			–	0.10 (0.004)

CLUTCH SPECIFICATIONS

Unit: mm (in)

ITEM		STANDARD	SERVICE LIMIT
Recommended clutch fluid		Honda DOT 4 brake fluid	–
Clutch master cylinder	Cylinder I.D.	12.700 – 12.743 (0.5000 – 0.5017)	12.76 (0.502)
	Piston O.D.	12.657 – 12.684 (0.4983 – 0.4994)	12.65 (0.498)
Clutch	Spring free length	46.7 (1.84)	45.8 (1.80)
	Disc thickness	2.92 – 3.08 (0.115 – 0.121)	2.5 (0.10)
	Plate warpage	–	0.30 (0.012)
Clutch outer guide I.D.		24.995 – 25.012 (0.9841 – 0.9847)	25.08 (0.987)
Mainshaft O.D. at clutch outer guide		24.980 – 24.993 (0.9835 – 0.9840)	24.96 (0.983)

CRANKCASE/TRANSMISSION SPECIFICATIONS

Unit: mm (in)

ITEM			STANDARD	SERVICE LIMIT
Transmission	Gear I.D.	M5, M6	28.000 – 28.021 (1.1024 – 1.1032)	28.04 (1.104)
		C1	26.007 – 26.028 (1.0239 – 1.0247)	26.04 (1.025)
		C2	31.000 – 31.025 (1.2205 – 1.2215)	31.04 (1.222)
		C3, C4	31.000 – 31.025 (1.2205 – 1.2215)	31.04 (1.222)
	Gear busing O.D.	M5, M6	27.959 – 27.980 (1.1007 – 1.1016)	27.94 (1.100)
		C2	30.970 – 30.995 (1.2193 – 1.2203)	30.95 (1.219)
		C3, C4	30.950 – 30.975 (1.2185 – 1.2195)	30.93 (1.218)
	Gear-to-bushing clearance	M5, M6	0.020 – 0.062 (0.0008 – 0.0024)	–
		C2	0.005 – 0.055 (0.0002 – 0.0022)	–
		C3, C4	0.025 – 0.075 (0.0010 – 0.0030)	–
	Gear bushing I.D.	M5	24.985 – 25.006 (0.9837 – 0.9845)	25.03 (0.985)
		C2	28.000– 28.021 (1.1024 – 1.1032)	28.04 (1.104)
	Mainshaft O.D.	at M5	24.959 – 24.980 (0.9826 – 0.9835)	24.95 (0.982)
	Countershaft O.D.	at C2	27.967 – 27.980 (1.1011 – 1.1016)	27.96 (1.101)
	Bushing-to-shaft clearance	M5	0.005 – 0.047 (0.0002 – 0.0019)	–
		C2	0.020 – 0.054 (0.0008 – 0.0021)	–
Shift fork, fork shaft	Fork I.D.		14.000 – 14.021 (0.5512 – 0.5520)	14.03 (0.552)
	Claw thickness		6.43 – 6.50 (0.253 – 0.256)	6.40 (0.252)
	Shift fork shaft O.D.		13.973 – 13.984 (0.5501 – 0.5506)	13.965 (0.5498)

CRANKSHAFT/PISTON/CYLINDER SPECIFICATIONS

Unit: mm (in)

ITEM			STANDARD	SERVICE LIMIT
Crankshaft	Connecting rod side clearance		0.10 – 0.30 (0.004 – 0.012)	0.40 (0.016)
	Runout		–	0.05 (0.002)
	Main journal bearing oil clearance		0.019 – 0.037 (0.0007 – 0.0015)	0.05 (0.002)
Cylinder	I.D,		72.000 – 72.015 (2.8346 – 2.8352)	72.10 (2.839)
	Out of round		–	0.10 (0.004)
	Taper		–	0.10 (0.004)
	Warpage		–	0.10 (0.004)
Piston, piston rings	Piston O.D. at 18 mm (0.7 in) from bottom		71.965 – 71.985 (2.8333 – 2.8340)	71.90 (2.831)
	Piston pin bore I.D.		17.002 – 17.008 (0.6694 – 0.6696)	17.02 (0.670)
	Piston pin O.D.		16.994 – 17.000 (0.6691 – 0.6693)	16.98 (0.669)
	Piston -to-piston pin clearance		0.002 – 0.014 (0.0001 – 0.0006)	0.04 (0.002)
	Piston ring end gap	Top	0.20 – 0.30 (0.008 – 0.012)	0.5 (0.02)
		Second	0.30 – 0.45 (0.012 – 0.018)	0.6 (0.02)
		Oil (side rail)	0.20 – 0.70 (0.008 – 0.028)	0.9 (0.04)
	Piston ring-to-ring groove clearance	Top	0.030 – 0.065 (0.0012 – 0.0026)	0.11 (0.004)
		Second	0.015 – 0.050 (0.0006 – 0.0020)	0.10 (0.004)
Cylinder-to-piston clearance			0.015 – 0.050 (0.0006 – 0.0020)	0.10 (0.004)
Connecting rod small end I.D.			17.016 – 17.034 (0.6699 – 0.6706)	17.04 (0.671)
Connecting rod-to-piston pin clearance			0.016 – 0.040 (0.0006 – 0.0016)	0.06 (0.002)
Crankpin bearing oil clearance			0.030 – 0.052 (0.0012 – 0.0020)	0.08 (0.003)

FRONT WHEEL/SUSPENSION/STEERING SPECIFICATIONS

Unit: mm (in)

ITEM		STANDARD	SERVICE LIMIT
Minimum tire tread depth		–	1.5 (0.06)
Cold tire pressure	Up to 90 kg (200 lb) load	250 kPa (2.50 kgf/cm^2, 36 psi)	–
	Up to maximum weight capacity	250 kPa (2.50 kgf/cm^2, 36 psi)	–
Axle runout		–	0.2 (0.01)
Wheel rim runout	Radial	–	2.0 (0.08)
	Axial	–	2.0 (0.08)
Wheel balance weight		–	60 g (2.1oz) max.
Fork	Spring free length	334.3 (13.16)	327.61 (12.898)
	Pipe runout	–	0.20 (0.008)
	Pre-load adjuster initial setting	6 mm (0.2 in) from top surface of fork cap	–
	Recommended fork fluid	Pro Honda Suspension Fluid SS-8	–
	Fluid level	100 (3.9)	–
	Fluid capacity	544 ± 2.5 cm^3 (18.4 ± 0.08 US oz, 19.1 ± 0.09 Imp oz)	–
Steering head bearing pre-load		1.0 – 1.5 kgf (2.2 – 3.3 lbf)	–

REAR WHEEL/SUSPENSION SPECIFICATIONS

Unit: mm (in)

ITEM			STANDARD	SERVICE LIMIT
Minimum tire tread depth			–	2.0 (0.08)
Cold tire pressure	Up to 90 kg (200 lb) load		290 kPa (2.90 kgf/cm^2, 42 psi)	–
	Up to maximum weight capacity		290 kPa (2.90 kgf/cm^2, 42 psi)	–
Axle runout			–	0.2 (0.01)
Wheel rim runout	Radial		–	2.0 (0.08)
	Axial		–	2.0 (0.08)
Wheel balance weight			–	60 g (2.1 oz) max.
Drive chain	Size/link	DID	DID50VA8-110LE	–
		RK	RK50HFOZ5-110LE	–
	Slack		25 – 35 (1 – 1-3/8)	–
Shock absorber	Pre-load adjuster standard position (Standard type)		2nd groove	–
	Pre-load adjuster dial standard position (ABS type)		7 clicks out from lower position	–
	Rebound adjuster initial setting		1-1/4 turns out from full hard	–

HYDRAULIC BRAKE SPECIFICATIONS

Unit: mm (in)

ITEM			STANDARD	SERVICE LIMIT
Front	Specified brake fluid		Honda DOT 4 brake fluid	–
	Brake disc thickness		4.5 (0.18)	3.5 (0.14)
	Brake disc warpage		–	0.20 (0.008)
	Master cylinder I.D.		14.000 – 14.043 (0.5512 – 0.5529)	14.055 (0.5533)
	Master piston O.D.		13.957 – 13.984 (0.5495 – 0.5506)	13.945 (0.5490)
	Secondary master cylinder I.D.		12.700 – 12.743 (0.5000 – 0.5017)	12.76 (0.502)
	Secondary master piston O.D.		12.657 – 12.684 (0.4983 – 0.4994)	12.65 (0.498)
	Left caliper cylinder I.D.	Upper	25.400 – 25.450 (1.0000 – 1.0020)	25.460 (1.0024)
		Middle	25.400 – 25.450 (1.0000 – 1.0020)	25.460 (1.0024)
		Lower	25.400 – 25.450 (1.0000 – 1.0020)	25.460 (1.0024)
	Left caliper piston O.D.	Upper	25.318 – 25.368 (0.9968 – 0.9987)	25.310 (0.9965)
		Middle	25.318 – 25.368 (0.9968 – 0.9987)	25.310 (0.9965)
		Lower	25.318 – 25.368 (0.9968 – 0.9987)	25.310 (0.9965)
	Right caliper cylinder I.D.	Upper	25.400 – 25.450 (1.0000 – 1.0020)	25.460 (1.0024)
		Middle	22.650 – 22.700 (0.8917 – 0.8937)	22.710 (0.8941)
		Lower	25.400 – 25.450 (1.0000 – 1.0020)	25.460 (1.0024)
	Right caliper piston O.D.	Upper	25.318 – 25.368 (0.9968 – 0.9987)	25.310 (0.9965)
		Middle	22.585 – 22.618 (0.8892 – 0.8905)	22.560 (0.8882)
		Lower	25.318 – 25.368 (0.9968 – 0.9987)	25.310 (0.9965)
Rear	Specified brake fluid		DOT 4	–
	Brake pedal height		90.0 (3.54)	–
	Brake disk thickness		6.0 (0.23)	5.0 (0.20)
	Brake disc warpage		–	0.30 (0.012)
	Master cylinder I.D.		17.460 – 17.503 (0.6874 – 0.6891)	17.515 (0.6896)
	Master piston O.D.		17.417 – 17.444 (0.6857 – 0.6868)	17.405 (0.6852)
	Caliper cylinder I.D.	Front	25.400 – 25.450 (1.0000 – 1.0020)	25.460 (1.0024)
		Center	25.400 – 25.450 (1.0000 – 1.0020)	25.460 (1.0024)
		Rear	25.400 – 25.450 (1.0000 – 1.0020)	25.460 (1.0024)
	Caliper piston O.D.	Front	25.318 – 25.368 (0.9968 – 0.9987)	25.310 (0.9965)
		Center	25.318 – 25.368 (0.9968 – 0.9987)	25.310 (0.9965)
		Rear	25.318 – 25.368 (0.9968 – 0.9987)	25.310 (0.9965)

BATTERY/CHARGING SYSTEM SPECIFICATIONS

ITEM			SPECIFICATIONS
Battery	Capacity		12V – 10Ah
	Current leakage		2.5 mA max.
	Voltage (20°C/68°F)	Fully charged	13.0 – 13.2 V
		Needs charging	Below 12.3 V
	Charging current	Normal	0.9 A/5 – 10 h
		Quick	4.5 A/0.5 h
Alternator	Capacity		0.47 kW/5,000 rpm
	Charging coil resistance (20°C/68°F)		0.1 – 1.0 Ω

IGNITION SYSTEM SPECIFICATIONS

ITEM		SPECIFICATIONS
Spark plug (Iridium)	Standard	IMR9B-9H (NGK)
		VNH27Z (DENSO)
	Optional	IMR8B-9H (NGK)
		VNH24Z (DENSO)
Spark plug gap		0.80 – 0.90 mm (0.031 – 0.035 in)
Ignition coil peak voltage		100 V minimum
Ignition pulse generator peak voltage		0.7 V minimum
Ignition timing ("F" mark)		15° BTDC at idle

ELECTRIC STARTER/STARTER CLUTCH SPECIFICATIONS

Unit: mm (in)

ITEM	STANDARD	SERVICE LIMIT
Starter motor brush length	12.0 – 13.0 (0.47 – 0.51)	6.5 (0.26)
Starter driven gear boss O.D.	45.657 – 45.673 (1.7975 – 1.7981)	45.64 (1.797)

LIGHTS/METERS/SWITCHES SPECIFICATIONS

ITEM			SPECIFICATIONS
Bulbs	Headlight	Hi	12V – 55 W X 2
		Lo	12V – 55 W X 2
	Brake/tail light		12V – 21/5 W X 2
	Front turn signal/running light		12V – 21/5 W X 2
	Rear turn signal light		12V – 21 W X 2
	License light		12V – 4 CP
	Instrument light		LED
	Turn signal indicator		LED
	High beam indicator		LED
	Neutral indicator		LED
	Oil pressure indicator		LED
	PGM-FI malfunction indicator		LED
Fuse	Main fuse		30 A
	PGM-FI fuse		30 A
	Sub fuse (Standard type)		10 A X 4, 20A X 2
	Sub fuse (ABS type)		10 A X 5, 20A X 2, 30A X 2
Tachometer peak voltage			10.5 V minimum
Coolant temperature sensor resistance (50°C/122°F)			6.8 – 7.2 Ω
Open air temperature sensor resistance (25°C/77°F)			4.8 – 5.2 Ω
Fan motor switch	Start to close (ON)		98 – 102 °C (208 – 216 °F)
	Stop to open		93 – 97 °C (199 – 207 °F)

STANDARD TORQUE VALUES

FASTENER TYPE	TORQUE N·m (kgf·m, lbf·ft)	FASTENER TYPE	TORQUE N·m (kgf·m, lbf·ft)
5 mm hex bolt and nut	5 (0.5, 3.6)	5 mm screw	4 (0.4, 2.9)
6 mm hex bolt and nut	10 (1.0, 7)	6 mm screw	9 (0.9, 6.5)
8 mm hex bolt and nut	22 (2.2, 16)	6 mm flange bolt (8 mm head, small flange)	10 (1.0, 7)
10 mm hex bolt and nut	34 (3.5, 25)		
12 mm hex bolt and nut	54 (5.5, 40)	6 mm flange bolt (8 mm head, large flange)	12 (1.2, 9)
		6 mm flange bolt (10 mm head) and nut	12 (1.2, 9)
		8 mm flange bolt and nut	26 (2.7, 20)
		10 mm flange bolt and nut	39 (4.0, 29)

ENGINE & FRAME TORQUE VALUES

- Torque specifications listed below are for important fasteners.
- Others should be tightened to standard torque values listed above.

NOTE:

1. Apply sealant to the threads.
2. Apply a locking agent to the threads.
3. Stake.
4. Apply oil to the threads and flange surface.
5. U-nut.
6. ALOC bolt/screw: replace with a new one.
7. Apply grease to the threads.
8. Apply molybdenum disulfide oil to the threads and seating surface.
9. CT bolt.
10. Left hand threads.

ENGINE

MAINTENANCE

ITEM	Q'TY	THREAD DIA. (mm)	TORQUE N·m (kgf·m, lbf·ft)	REMARKS
Spark plug	4	10	12 (1.2, 9)	
Timing hole cap	1	45	18 (1.8, 13)	NOTE 7
Engine oil filter cartridge	1	20	26 (2.7, 20)	NOTE 4
Engine oil drain bolt	1	12	29 (3.0, 22)	

LUBLICATION

ITEM	Q'TY	THREAD DIA. (mm)	TORQUE N·m (kgf·m, lbf·ft)	REMARKS
Oil cooler boss	1	–	See page 1-15	
Oil pump assembly bolt	1	6	12 (1.2, 9)	NOTE 9

FUEL SYSTEM (Programmed Fuel Injection)

ITEM	Q'TY	THREAD DIA. (mm)	TORQUE N·m (kgf·m, lbf·ft)	REMARKS
ECT (Engine Coolant Temperature)/thermo sensor	1	12	23 (2.3, 17)	
Throttle body insulator band screw	8	–	See page 1-15	
Throttle cable bracket socket bolt	2	5	3 (0.35, 2.5)	
Starter valve synchronization plate screw	4	3	1 (0.09, 0.7)	
Starter valve lock nut	4	10	2 (0.18, 1.3)	
Fast idle wax unit link plate screw	2	3	1 (0.09, 0.7)	
Fast idle wax unit mounting screw	2	6	5 (0.5, 3.6)	
Pressure regulator	1	18	27 (2.8, 20)	
Fuel rail mounting bolt	4	6	10 (1.0, 7)	

COOLING SYSTEM

ITEM	Q'TY	THREAD DIA. (mm)	TORQUE N·m (kgf·m, lbf·ft)	REMARKS
Water pump cover flange bolt	2	6	13 (1.3, 9)	NOTE 9

ENGINE MOUNTING

ITEM	Q'TY	THREAD DIA. (mm)	TORQUE N·m (kgf·m, lbf·ft)	REMARKS
Drive sprocket special bolt	1	10	51 (5.2, 38)	

CYLINDER HEAD/VALVES

ITEM	Q'TY	THREAD DIA. (mm)	TORQUE N·m (kgf·m, lbf·ft)	REMARKS
Cylinder head flange bolt	12	9	44 (4.5, 33)	NOTE 4
Cylinder head orifice bolt	4	6	8 (0.8, 6)	
Camshaft holder flange bolt	40	6	12 (1.2, 9)	NOTE 4
Cylinder head cover bolt	8	6	10 (1.0, 7)	
Breather plate flange bolt	4	6	12 (1.2, 9)	NOTE 2, 9
PAIR check reed valve cover SH bolt	4	6	12 (1.2, 9)	NOTE 9
Cam sprocket UBS bolt	8	7	20 (2.0, 14)	NOTE 2
Cam chain tensioner flange bolt	2	8	26 (2.7, 20)	NOTE 2
Cam chain guide flange bolt	2	6	12 (1.2, 9)	NOTE 2
Cylinder head stud bolt (exhaust pipe stud bolt)	8	6	See page 1-15	

CLUTCH

ITEM	Q'TY	THREAD DIA. (mm)	TORQUE N·m (kgf·m, lbf·ft)	REMARKS
Clutch spring bolt	5	6	12 (1.2, 9)	
Clutch center lock nut	1	22	127 (13.0, 94)	NOTE 3, 4
Oil pump driven sprocket bolt	1	6	18 (1.8, 13)	NOTE 2
Clutch hose oil bolt	1	10	34 (3.5, 25)	
Clutch slave cylinder bleed valve	1	8	9 (0.9, 6.5)	

GEARSHIFT LINKAGE

ITEM	Q'TY	THREAD DIA. (mm)	TORQUE N·m (kgf·m, lbf·ft)	REMARKS
Drive sprocket cover rubber mounting bolt	2	6	12 (1.2, 9)	NOTE 2, 9
Shift drum center socket bolt	1	8	23 (2.3, 17)	NOTE 2
Shift drum stopper arm pivot bolt	1	6	12 (1.2, 9)	
Gearshift spindle return spring pin	1	8	23 (2.3, 17)	

CRANKCASE/TRANSMISSION

ITEM	Q'TY	THREAD DIA. (mm)	TORQUE N·m (kgf·m, lbf·ft)	REMARKS
Crankcase bolt (Main journal)	8	9	See page 11-13	NOTE 4
Crankcase bolt	1	10	39 (4.0, 29)	
Crankcase bolt	3	7	18 (1.8, 13)	

CRANKSHAFT/PISTON/CYLINDER

ITEM	Q'TY	THREAD DIA. (mm)	TORQUE N·m (kgf·m, lbf·ft)	REMARKS
Connecting rod bearing cap nut	8	9	33 (3.4, 25)	NOTE 4

BATTERY/CHARGING SYSTEM

ITEM	Q'TY	THREAD DIA. (mm)	TORQUE N·m (kgf·m, lbf·ft)	REMARKS
Flywheel flange bolt	1	10	103 (10.5, 76)	NOTE 4
Alternator stator torx bolt	4	6	12 (1.2, 9)	
Starter wire holder socket bolt	1	6	12 (1.2, 9)	

IGNITION SYSTEM

ITEM	Q'TY	THREAD DIA. (mm)	TORQUE N·m (kgf·m, lbf·ft)	REMARKS
Ignition pulse generator SH flange bolt	1	6	12 (1.2, 9)	

ELECTRIC STARTER/STARTER CLUTCH

ITEM	Q'TY	THREAD DIA. (mm)	TORQUE N·m (kgf·m, lbf·ft)	REMARKS
Ignition pulse generator rotor/primary drive gear flange bolt	1	10	103 (10.5, 76)	NOTE 4

LIGHTS/METERS/SWITCHES

ITEM	Q'TY	THREAD DIA. (mm)	TORQUE N·m (kgf·m, lbf·ft)	REMARKS
Oil pressure switch	1	PT 1/8	12 (1.2, 9)	NOTE 1
Neutral switch	1	10	12 (1.2, 9)	

Insulator clamp (Cylinder head side):

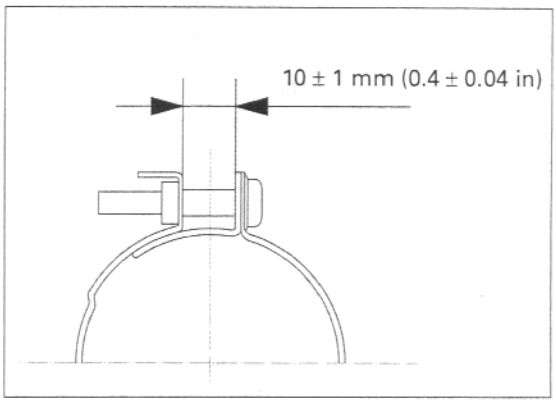

Insulator clamp (Throttle body side):

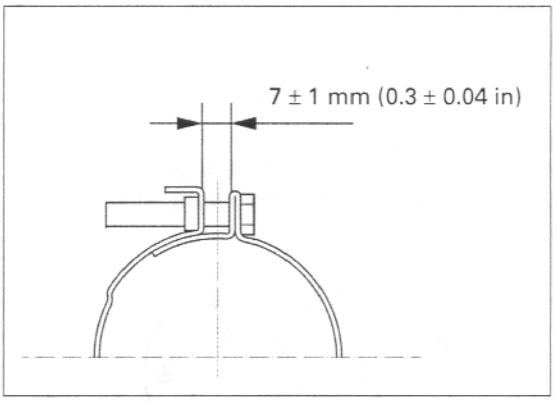

Oil cooler boss:

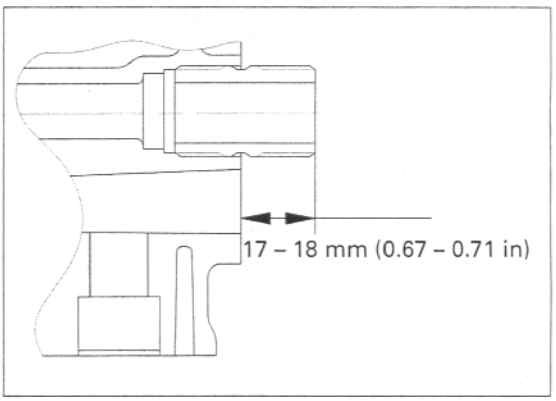

Exhaust pipe stud bolt:

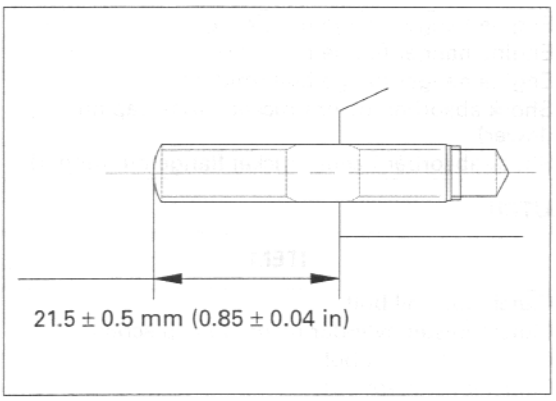

FRAME

FRAME BODY PANELS/EXHAUST SYSTEM

ITEM	Q'TY	THREAD DIA. (mm)	TORQUE N·m (kgf·m, lbf·ft)	REMARKS
Upper cowl pan screw	2	5	2 (0.15, 1.1)	
Side cowl pan screw	6	5	2 (0.15, 1.1)	
Inner half cowl pan screw	4	5	2 (0.15, 1.1)	
Rear cowl pan screw	2	5	2 (0.15, 1.1)	
Grab rail socket bolt	4	8	22 (2.2, 16)	
Upper cowl stay mounting nut	1	10	64 (6.5, 47)	
Upper cowl stay mounting nut	1	8	47 (4.8, 35)	
Seat rail lower mounting nut	2	10	44 (4.5, 33)	
Seat rail upper mounting flange nut	1	10	54 (5.5, 40)	
Exhaust pipe joint special nut	8	6	12 (1.2, 9)	
Exhaust pipe flange nut	1	8	21 (2.1, 15)	
Pillion footpeg bracket socket bolt	4	8	32 (3.3, 24)	

FUEL SYSTEM

ITEM	Q'TY	THREAD DIA. (mm)	TORQUE N·m (kgf·m, lbf·ft)	REMARKS
Fuel filler cap bolt	3	4	2 (0.18, 1.3)	
Fuel hose banjo bolt (fuel tank side)	1	12	22 (2.2, 16)	
Fuel hose sealing nut (throttle body side)	1	12	22 (2.2, 16)	
Fuel pump mounting nut	6	6	12 (1.2, 9)	
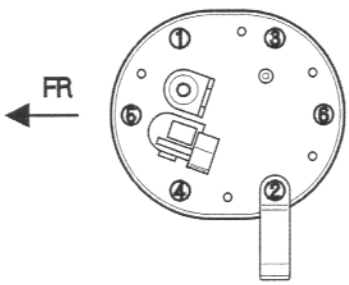				
O_2 sensor	1	12	25 (2.6, 19)	

COOLING SYSTEM

ITEM	Q'TY	THREAD DIA. (mm)	TORQUE N·m (kgf·m, lbf·ft)	REMARKS
Cooling fan mounting nut	1	5	3 (0.27, 2.0)	NOTE 2
Fan motor mounting nut	3	5	5 (0.5, 3.6)	
Fan motor switch	1	18	18 (1.8, 13)	

ENGINE MOUNTING

ITEM	Q'TY	THREAD DIA. (mm)	TORQUE N·m (kgf·m, lbf·ft)	REMARKS
Engine hanger flange nut (front)	1	12	54 (5.5, 40)	
Engine hanger flange bolt (rear)	2	10	44 (4.5, 33)	
Engine hanger flange bolt (middle)	2	10	44 (4.5, 33)	
Shock absorber lower bracket flange cap nut (lower)	1	10	39 (4.0, 29)	
Shock absorber lower bracket flange nut (upper)	1	10	42 (4.3, 31)	NOTE 5

CLUTCH

ITEM	Q'TY	THREAD DIA. (mm)	TORQUE N·m (kgf·m, lbf·ft)	REMARKS
Clutch hose oil bolt	2	10	34 (3.5, 25)	
Clutch master cylinder reservoir cap screw	2	4	2 (0.2, 1.4)	
Clutch lever pivot bolt	1	6	1 (0.1, 0.7)	
Clutch lever pivot nut	1	6	6 (0.6, 4.3)	
Clutch switch screw	1	4	1 (0.1, 0.7)	

FRONT WHEEL/SUSPENSION/STEERING

ITEM	Q'TY	THREAD DIA. (mm)	TORQUE N·m (kgf·m, lbf·ft)	REMARKS
Handlebar weight mounting screw	2	6	10 (1.0, 7)	NOTE 6
Handlebar pinch bolt	2	8	26 (2.7, 20)	
Front axle bolt	1	14	59 (6.0, 43)	
Front axle holder pinch bolt	2	8	22 (2.2, 16)	
Front brake disc bolt	12	6	20 (2.0, 14)	NOTE 6
Fork socket bolt	2	8	20 (2.0, 14)	NOTE 2
Fork cap	2	39	23 (2.3, 17)	
Fork damper rod lock nut	2	10	20 (2.0, 14)	
Steering stem nut	1	24	103 (10.5, 76)	
Steering bearing adjusting nut	1	26	25 (2.5, 18)	See page 13-37
Steering bearing adjusting nut lock nut	1	26	–	
Fork top bridge pinch bolt	2	8	23 (2.3, 17)	
Fork bottom bridge pinch bolt	2	10	49 (5.0, 36)	

REAR WHEEL/SUSPENSION

ITEM	Q'TY	THREAD DIA. (mm)	TORQUE N·m (kgf·m, lbf·ft)	REMARKS
Rear axle nut	1	35	201 (20.5, 148)	NOTE 3, 4
Final driven sprocket nut	6	10	64 (6.5, 47)	
Rear wheel bolt	4	12	108 (11.0, 80)	
Rear brake disc nut	4	8	34 (3.5, 25)	NOTE 5
Rear brake torque rod bolt	2	10	34 (3.5, 25)	NOTE 2
Swingarm pivot nut	1	18	93 (9.5, 69)	
Drive chain slider flange bolt	4	6	9 (0.9, 6.5)	NOTE 6
Axle bearing holder pinch bolt	1	16	74 (7.5, 54)	
Air guide mounting bolt	2	6	9 (0.9, 6.5)	NOTE 6
Rear shock absorber mounting nut	2	10	42 (4.3, 31)	NOTE 5
Shock arm nut (frame side)	1	10	42 (4.3, 31)	NOTE 5
Shock arm nut (link plate side)	1	10	42 (4.3, 31)	NOTE 5
Shock link plate-to-swingarm nut	1	10	42 (4.3, 31)	NOTE 5
Bearing holder stopper bolt	1	5	7 (0.7, 5.1)	NOTE 2

HYDRAULIC BRAKE

ITEM	Q'TY	THREAD DIA. (mm)	TORQUE N·m (kgf·m, lbf·ft)	REMARKS
Front master cylinder reservoir cap screw	2	4	2 (0.2, 1.4)	
Front brake lever pivot bolt	1	6	1 (0.1, 0.7)	
Front brake lever pivot nut	1	6	6 (0.6, 4.3)	
Front brake light switch screw	1	4	1 (0.1, 0.7)	
Right front brake caliper mounting bolt	2	8	31 (3.2, 23)	NOTE 6
Left front brake caliper pivot bolt	1	8	31 (3.2, 23)	NOTE 6
Left front brake caliper bolt (second master joint)	1	8	31 (3.2, 23)	NOTE 6
Caliper body B bolt	9	8	32 (3.3, 24)	NOTE 6
Front caliper main slide pin	2	12	23 (2.3, 17)	
Front caliper sub slide pin	2	8	13 (1.3, 9)	
Pad pin	3	10	18 (1.8, 13)	
Brake caliper bleed valve	3	8	6 (0.6, 4.3)	
Second master cylinder push rod nut	1	8	18 (1.8, 13)	
Second master cylinder connector	1	6	10 (1.0, 7)	NOTE 2
Rear master cylinder push rod joint nut	1	8	18 (1.8, 13)	
Rear master cylinder reservoir hose joint screw	1	4	2 (0.15, 1.1)	
Brake hose oil bolt	7	10	34 (3.5, 25)	
Brake pipe joint	–	10	17 (1.7, 12)	NOTE 4
Front brake hose clamp flange bolt (left fork)	1	6	10 (1.0, 7)	
Front brake hose 3-way joint bolt (right side)	1	6	10 (1.0, 7)	
Front brake hose clamp bolt (steering stem)	2	6	10 (1.0, 7)	
PCV air bleed valve	1	8	8 (0.8, 5.8)	
Rear brake caliper mounting bolt	2	8	31 (3.2, 23)	NOTE 6

ABS

ITEM	Q'TY	THREAD DIA. (mm)	TORQUE N·m (kgf·m, lbf·ft)	REMARKS
Front wheel pulser ring mounting bolt	3	5	7 (0.7, 5.1)	NOTE 2
Rear wheel pulser ring mounting bolt	4	5	9 (0.9, 6.5)	NOTE 2
Modulator body mounting bolt	8	5	4 (0.4, 2.9)	
Angle sensor assembly	4	5	4 (0.4, 2.9)	
Back-up spring cap	4	4	2.5 (0.25, 1.8)	
Modulator oil bolt	8	10	34 (3.5, 25)	
Brake pipe joint bleeder screw	1	8	6 (0.6, 4.3)	

LIGHTS/METERS/SWITCHES

ITEM	Q'TY	THREAD DIA. (mm)	TORQUE N·m (kgf·m, lbf·ft)	REMARKS
Side stand switch bolt	1	6	10 (1.0, 7)	NOTE 6
Ignition switch mounting bolt	2	8	26 (2.7, 20)	

OTHERS

ITEM	Q'TY	THREAD DIA. (mm)	TORQUE N·m (kgf·m, lbf·ft)	REMARKS
Side stand bracket socket bolt	2	10	39 (4.0, 29)	
Side stand pivot bolt	1	10	10 (1.0, 7)	
Side stand pivot nut	1	10	29 (3.0, 22)	
Rear shock absorber upper bracket flange nut	1	10	42 (4.3, 31)	NOTE 5
Footpeg bracket bolt	4	8	32 (3.3, 24)	
Main stand flange bolt	1	10	54 (5.5, 40)	NOTE 10
Main stand special bolt	1	10	54 (5.5, 40)	

TOOLS

1. Equivalent commercially available in U.S.A.
2. Not available in U.S.A.
3. U.S.A.only
4. Newly designed tool.
5. Newly provided tool.
6. Alternative tool.

DESCRIPTION	TOOL NUMBER	REMARKS	REF. SEC.
ECM test harness 26P	070MZ-0010100	NOTE 4: Two required	5
Valve spring compressor attachment, ϕ16 X 75	070ME-MCW0100	NOTE 4	8
Oil pressure gauge attachment	07406-0030001	NOTE 1	4
Fuel pressure gauge	07406-0040003	NOTE 6: 07406-0040002	5
Oil pressure gauge set	07506-3000001	NOTE 1	4
Clutch center holder	07724-0050002	NOTE 1	9
Flywheel holder	07725-0040000	NOTE 1	17
Rotor puller	07733-0020001	NOTE 6: 07933-3950000	17
Remover weight	07741-0010201		14
Attachment, 37 X 40 mm	07746-0010200		14
Attachment, 42 X 47 mm	07746-0010300		13, 14
Attachment, 52 X 55 mm	07746-0010400		14
Attachment, 62 X 68 mm	07746-0010500		14
Attachment, 24 X 26 mm	07746-0010700		14
Inner driver C	07746-0030100		11
Attachment, 25 mm I.D.	07746-0030200		12
Pilot, 17 mm	07746-0040400		14
Pilot, 20 mm	07746-0040500		13, 14
Pilot, 35 mm	07746-0040800		14
Pilot, 40 mm	07746-0040900		14
Pilot, 28 mm	07746-0041100		14
Bearing remover shaft	07746-0050100		13
Bearing remover head, 20 mm	07746-0050600		13
Driver	07749-0010000		13, 14
Valve spring compressor	07757-0010000		8
Valve seat cutter		NOTE 1	8
– Seat cutter, 27.5 mm (45° EX)	07780-0010200		
– Seat cutter, 29 mm (45° IN)	07780-0010300		
– Flat cutter, 28 mm (32° EX)	07780-0012100		
– Flat cutter, 30 mm (32° IN)	07780-0012200		
– Interior cutter, 30 mm (60° IN/EX)	07780-0014000		
– Cutter holder, 4.5 mm	07781-0010600		
Snap ring pliers	07914-SA50001		5, 9, 16
Steering stem socket	07916-3710101	NOTE 6: 07916-3710100	13
Bearing remover handle	07936-3710100		14
Bearing remover head	07936-3710600		14
Attachment, 28 X 30 mm	07946-1870100		14
Steering stem driver	07946-MB00000		13
Needle bearing remover	07946-KA50000		13
Ball race remover set	07946-KM90001		13
– Driver attachment, A	07946-KM90100		
– Driver attachment, B	07946-KM90200		
– Driver shaft assembly	07946-KM90300		
– Bearing remover, A	07946-KM90401		
– Bearing remover, B	07946-KM90500		
– Assembly base	07946-KM90600		
Steering stem driver	07946-MB00000		13
Main bearing driver attachment	07946-ME90200	NOTE 3	13
Driver shaft	07946-MJ00100		14
Slider weight	07947-KA50100	NOTE 3	13
Fork seal driver	07947-KF00100		13
Fork seal driver attachment	07947-KA40200		13
Valve spring compressor attachment	07959-KM30101		8

DESCRIPTION	TOOL NUMBER	REMARKS	REF. SEC.
Oil seal driver	07965-MA60000	NOTE 3	13
Pin driver	07GMD-KT80100		14
Oil filter wrench	07HAA-PJ70101		3
Peak voltage adaptor	07HGJ-0020100	NOTE 2	5, 18, 20
Needle bearing remover	07HMC-MR70100		14
Valve guide driver	07HMD-ML00101		8
Valve guide reamer, 4.5 mm	07HMH-ML00101		8
Tappet hole protector	07HMG-MR70002		8
Drive chain tool set	07HMH-MR10103	NOTE 3, 6:07HMH-MR1010B	3
Socket wrench, 46 mm	07HMJ-MN50100		14
Bearing remover set	07LMC-KV30100		14
Compression gauge attachment	07RMJ-MY50100	NOTE 1	8
Gauge joint adaptor	07RMK-MW40100		4
O_2 sensor wrench	07LAA-PT50101		5
Installer shaft	07VMF-KZ30200	NOTE 3	13
Installer attachment A	07VMF-MAT0100	NOTE 3	13
Remover attachment B	07VMF-MAT0100	NOTE 3	13
Slide pin stopper	07XMZ-MCE0100	NOTE 5	8
Tensioner holder B	07ZMG-MCAA400		8

LUBRICATION & SEAL POINTS

ENGINE

LOCATION	MATERIAL	REMARKS
Crankcase mating surface 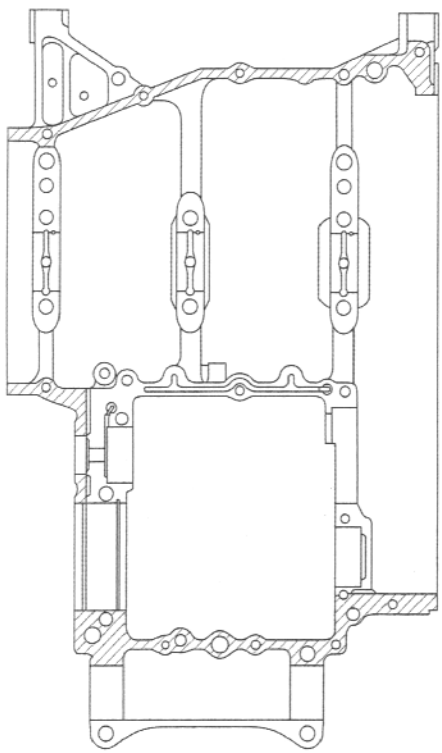 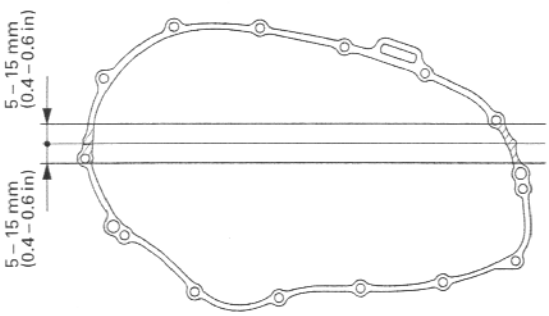	Liquid sealant (Three Bond 1207B or equivalent)	

LOCATION	MATERIAL	REMARKS
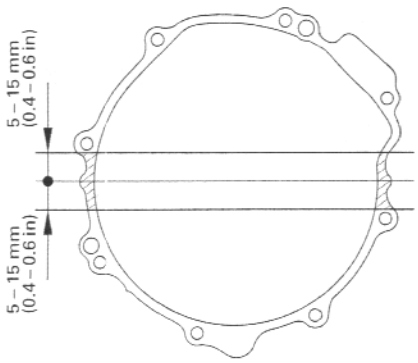 Oil pan mating surface 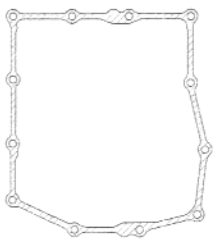 Oil pressure switch threads 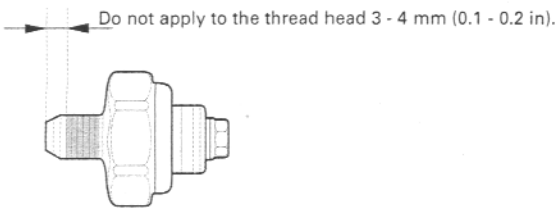 Alternator wire grommet Ignition pulse generator wire grommet Gearshift linkage cover bolt threads (2 places)	Liquid sealant (Three Bond 1207B or equivalent)	Coating width: 6.5 ± 1 mm
Cylinder head semi-circular cut-out 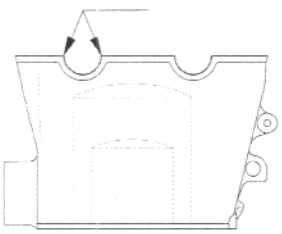	Sealant	
Main journal bearing surface Connecting rod bearing surface Valve stem (valve guide sliding surface) M3/4, C5, C6 shifter gear (shift fork grooves) Piston pin bore Connecting rod small end inner surface Valve lifter outer sliding surface Camshaft lobes/journals and thrust surface Clutch outer/primary driven gear sliding surface Primary drive gear sliding surface	Molybdenum disulfide oil (a mixture of 1/2 engine oil and 1/2 molybdenum disulfide grease	

LOCATION	MATERIAL	REMARKS
Piston sliding area Piston ring surface Clutch disc surface Each bearing Each gear teeth and rotating surface Main journal 9 mm bolt threads and seating Cylinder head 9 mm bolt threads and seating surface Connecting rod nut threads Clutch center lock nut threads Flywheel bolt threads and seating surface Primary drive gear bolt threads and seating surface Oil filter cartridge threads and O-ring Each O-ring Other rotating area and sliding surface	Engine oil	
Timing hole cap threads Each oil seal lips	Multi-purpose grease	
Gearshift linkage cover rubber bolt threads Cylinder head cover breather plate bolt threads Oil filter boss threads Oil pump driven sprocket bolt threads Cam sprocket bolt threads Cam chain tensioner pivot bolt threads Cam chain guide bolt threads Mainshaft bearing set plate bolt threads Shift drum bearing set plate bolt threads Shift drum center bolt threads	Locking agent	Coating width: 6.5 ± 1 mm Coating width: 6.5 ± 1 mm Coating width: 6.5 ± 1 mm Coating width: 6.5 ± 1 mm Coating width: 6.5 ± 1 mm Coating width: 6.5 ± 1 mm Coating width: 6.5 ± 1 mm Coating width: 6.5 ± 1 mm Coating width: 6.5 ± 1 mm Coating width: 6.5 ± 1 mm

FRAME

LOCATION	MATERIAL	REMARKS
Seat catch hook sliding area Front wheel dust seal lips Final driven flange-to-rear wheel hub mating surface and O-ring Rear wheel dust seal lips Rear wheel side collar inner surface Throttle grip pipe flange Clutch lever pivot bolt sliding area Rear brake pedal pivot sliding area Driver footpeg sliding area Passenger footpeg sliding area Side stand pivot Center stand pivot	Multi-purpose grease	
Steering head bearing sliding surface Steering head dust seal lips	Urea based multi-purpose grease with extreme pressure (example: EXCELITE EP2 manufactured by KYODO YUSHI, Japan), Shell Stamina EP2 or equivalent	
Swingarm pivot bearings Swingarm pivot dust seal lips Shock arm and shock link needle bearings Shock arm and shock link dust seal lips Shock absorber needle bearings Shock absorber dust seal lips	Multi-purpose grease (Shell Alvania EP2 or equivalent)	
Throttle cable A, B outer inside	Cable lubricant	
Handlebar grip rubber inside	Honda bond A or Honda Hand Grip Cement (U.S.A. only)	
Steering bearing adjustment nut threads	Engine oil	
Front brake lever-to-master piston contacting area Front brake lever pivot Rear master brake master piston-to-push rod contacting area Brake caliper dust seals Rear brake caliper boot inside Rear brake caliper pin boot inside	Silicone grease	
Brake master piston and cups Brake caliper piston and piston seals	DOT 4 brake fluid	
Fork cap O-ring Fork dust seal and oil seal lips	Pro Honda Suspension Fluid SS-8	
Rear brake reservoir hose joint screw threads Front brake caliper assembly bolt threads Rear brake caliper pin bolt threads	Locking agent	

CABLE & HARNESS ROUTING

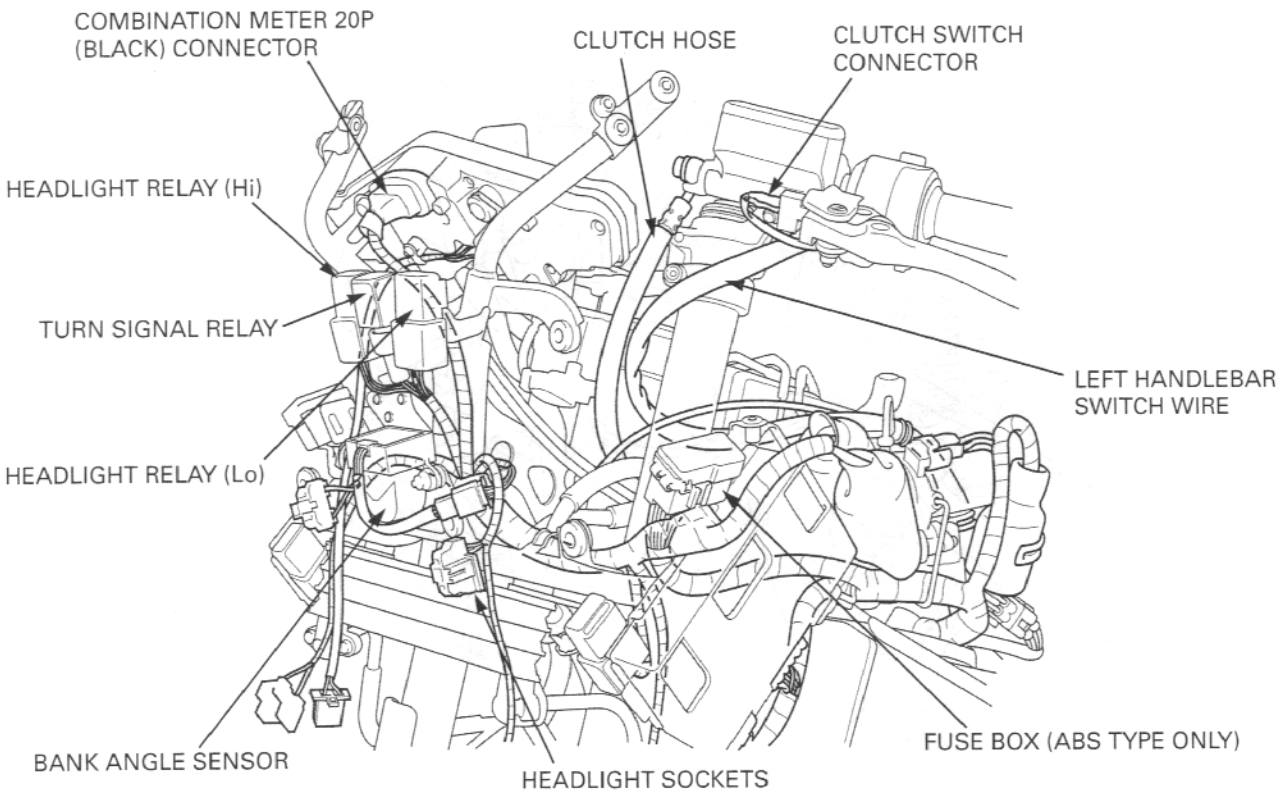

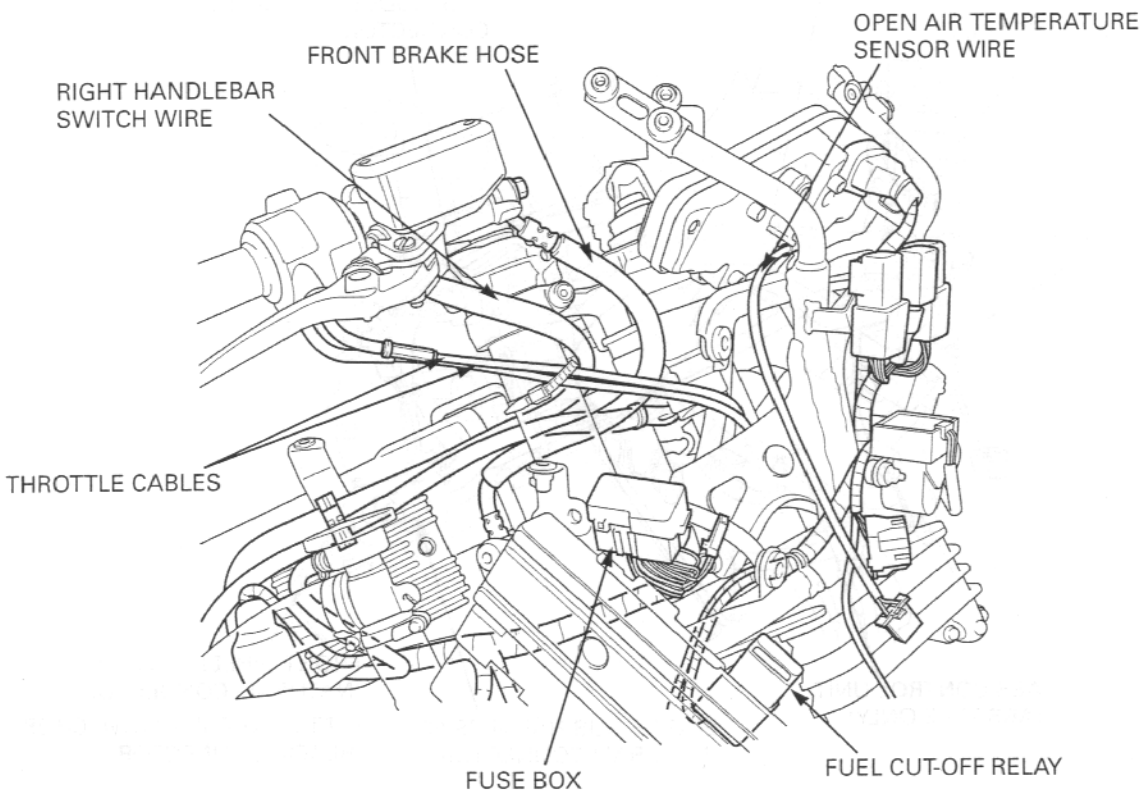

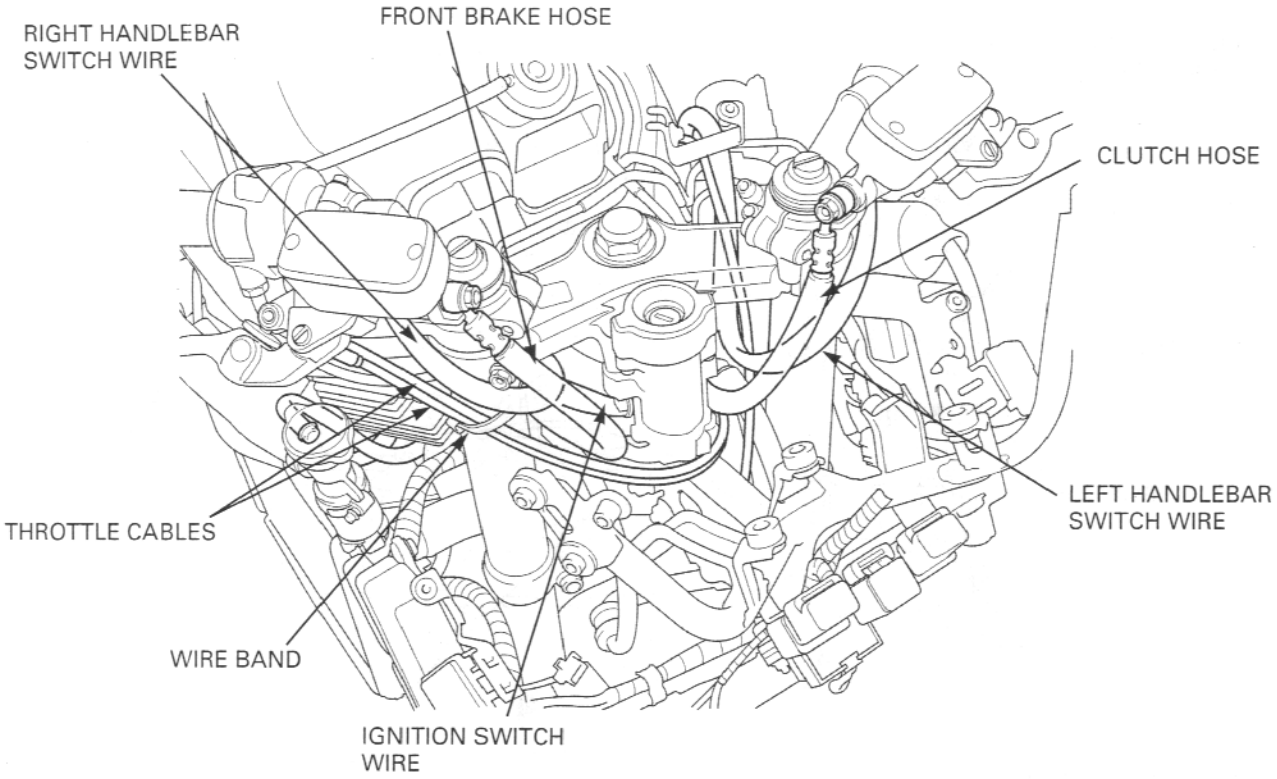
RIGHT HANDLEBAR SWITCH WIRE
FRONT BRAKE HOSE
CLUTCH HOSE
LEFT HANDLEBAR SWITCH WIRE
THROTTLE CABLES
WIRE BAND
IGNITION SWITCH WIRE

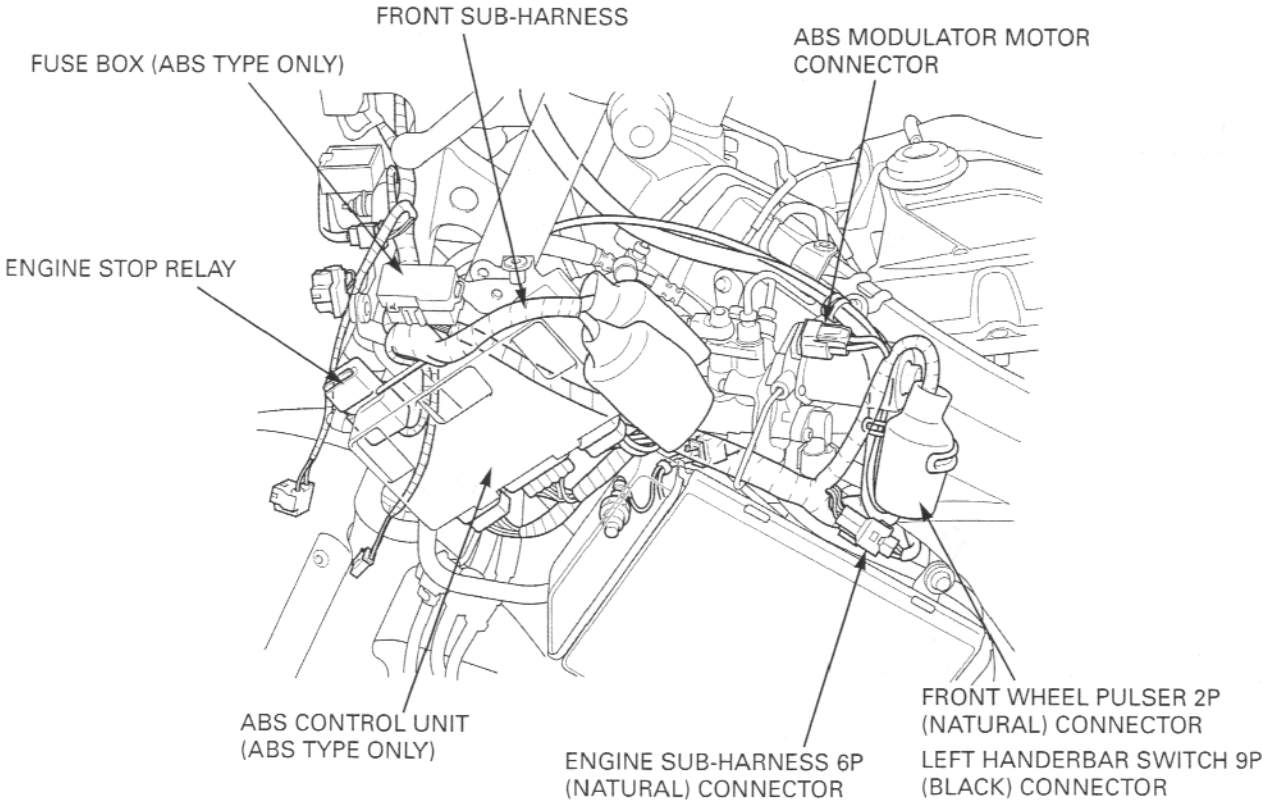
FRONT SUB-HARNESS
ABS MODULATOR MOTOR CONNECTOR
FUSE BOX (ABS TYPE ONLY)
ENGINE STOP RELAY
ABS CONTROL UNIT (ABS TYPE ONLY)
ENGINE SUB-HARNESS 6P (NATURAL) CONNECTOR
FRONT WHEEL PULSER 2P (NATURAL) CONNECTOR
LEFT HANDERBAR SWITCH 9P (BLACK) CONNECTOR

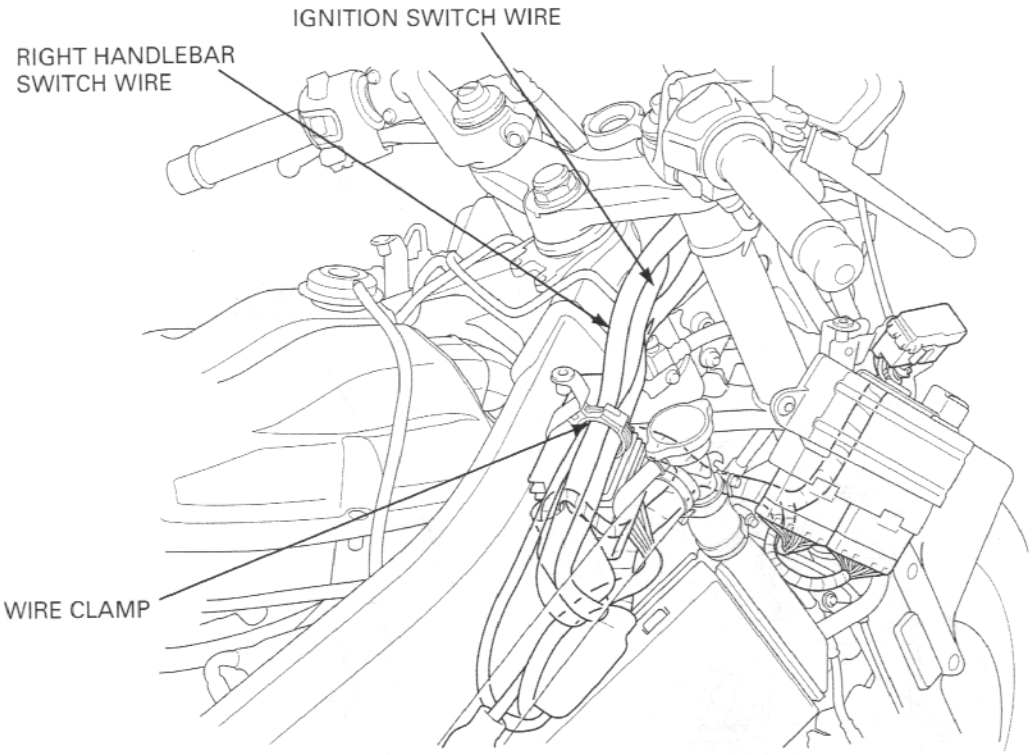
IGNITION SWITCH WIRE
RIGHT HANDLEBAR SWITCH WIRE
WIRE CLAMP

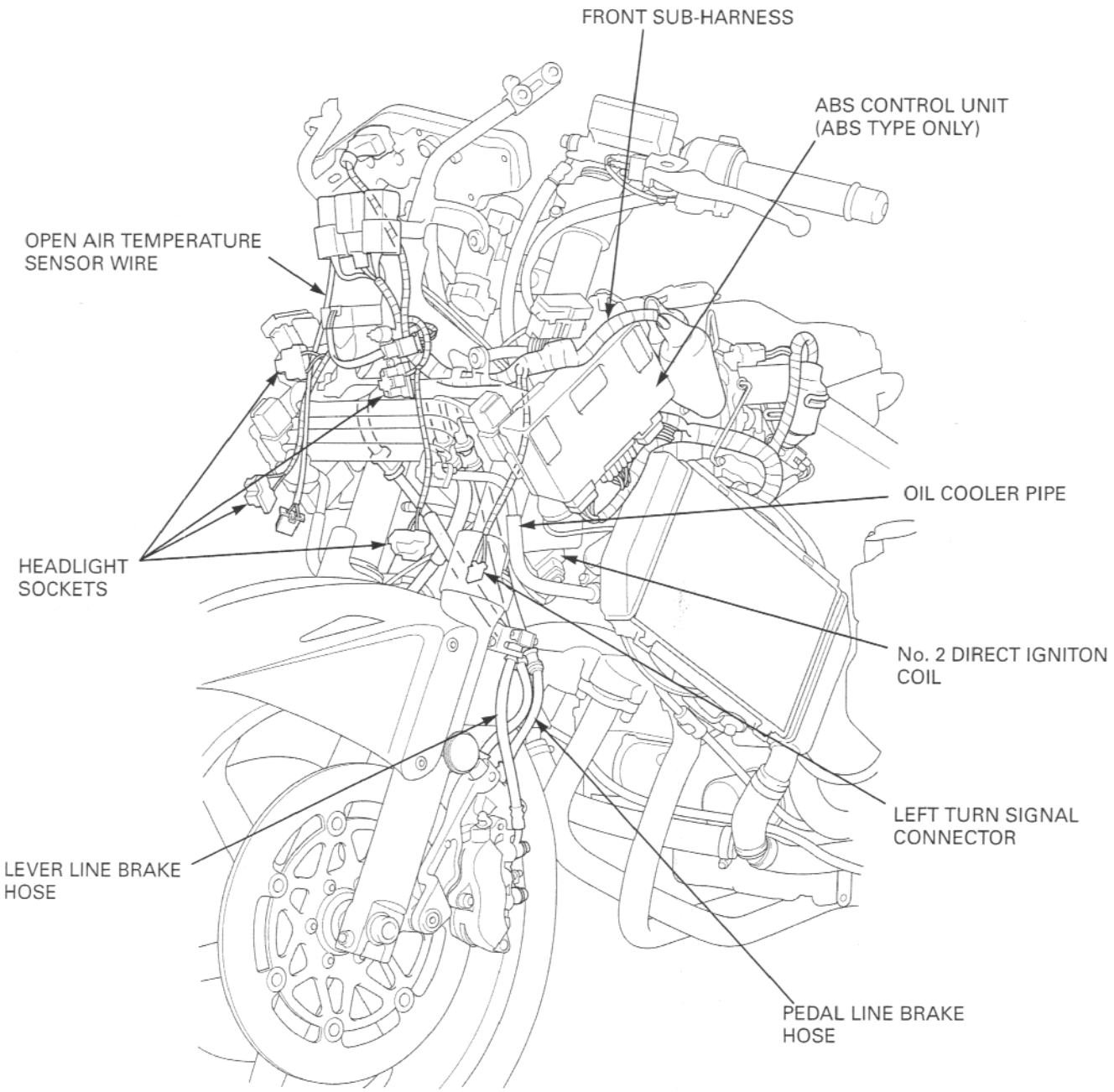
FRONT SUB-HARNESS
ABS CONTROL UNIT
(ABS TYPE ONLY)
OPEN AIR TEMPERATURE
SENSOR WIRE
OIL COOLER PIPE
HEADLIGHT
SOCKETS
No. 2 DIRECT IGNITON
COIL
LEFT TURN SIGNAL
CONNECTOR
LEVER LINE BRAKE
HOSE
PEDAL LINE BRAKE
HOSE

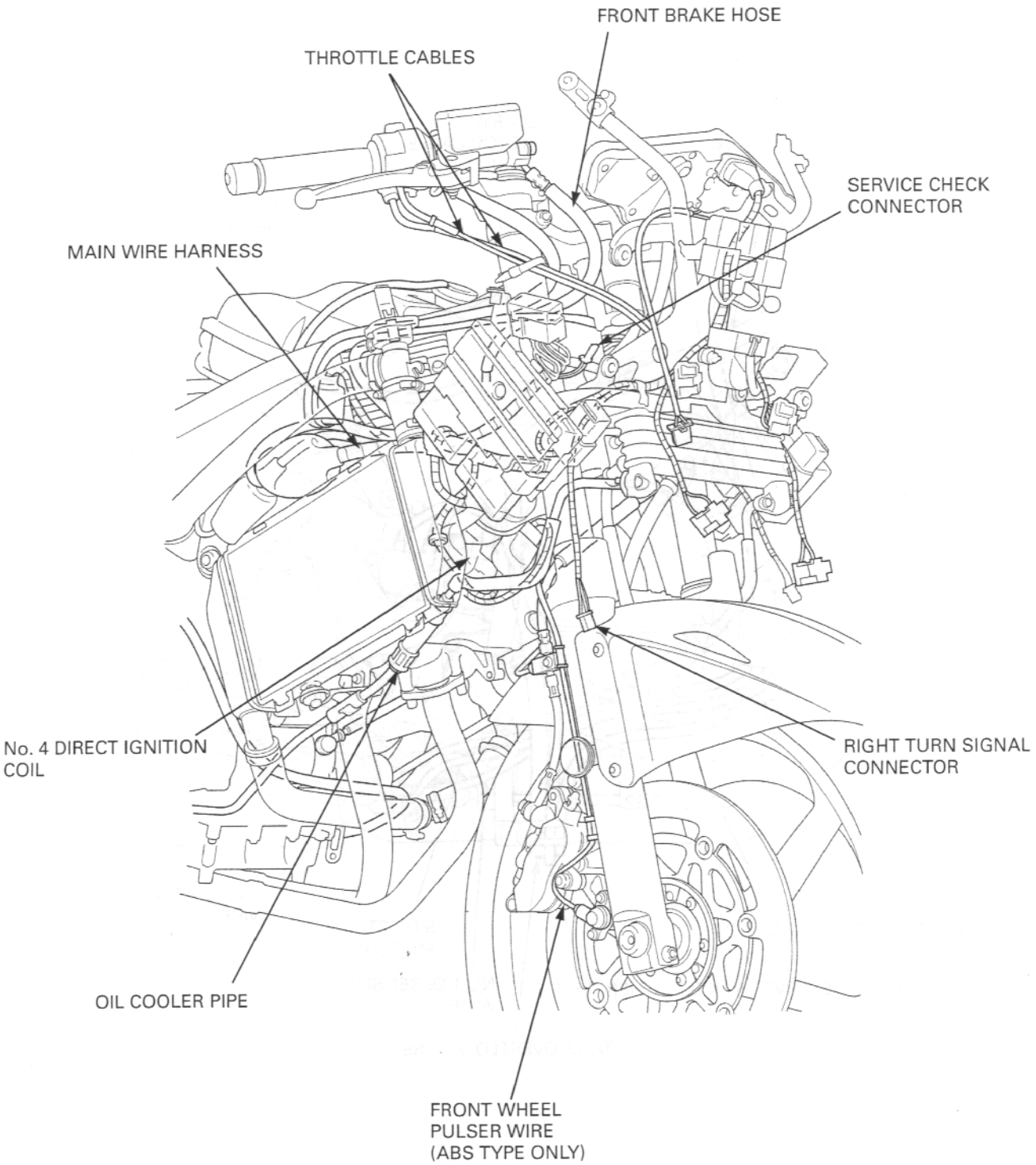
FRONT BRAKE HOSE
THROTTLE CABLES
SERVICE CHECK CONNECTOR
MAIN WIRE HARNESS
No. 4 DIRECT IGNITION COIL
RIGHT TURN SIGNAL CONNECTOR
OIL COOLER PIPE
FRONT WHEEL PULSER WIRE (ABS TYPE ONLY)

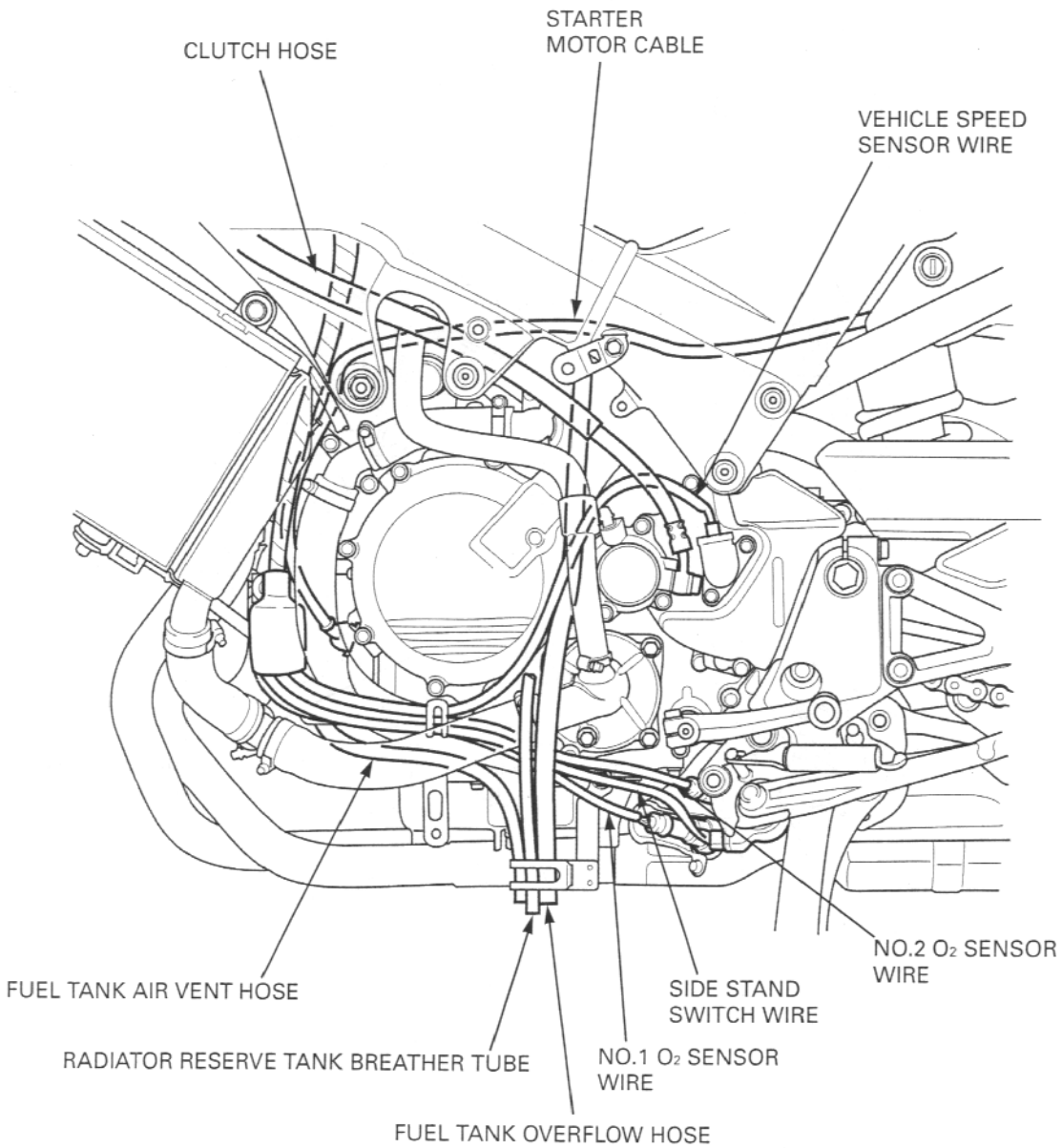
CLUTCH HOSE
STARTER MOTOR CABLE
VEHICLE SPEED SENSOR WIRE
NO.2 O2 SENSOR WIRE
FUEL TANK AIR VENT HOSE
SIDE STAND SWITCH WIRE
RADIATOR RESERVE TANK BREATHER TUBE
NO.1 O2 SENSOR WIRE
FUEL TANK OVERFLOW HOSE

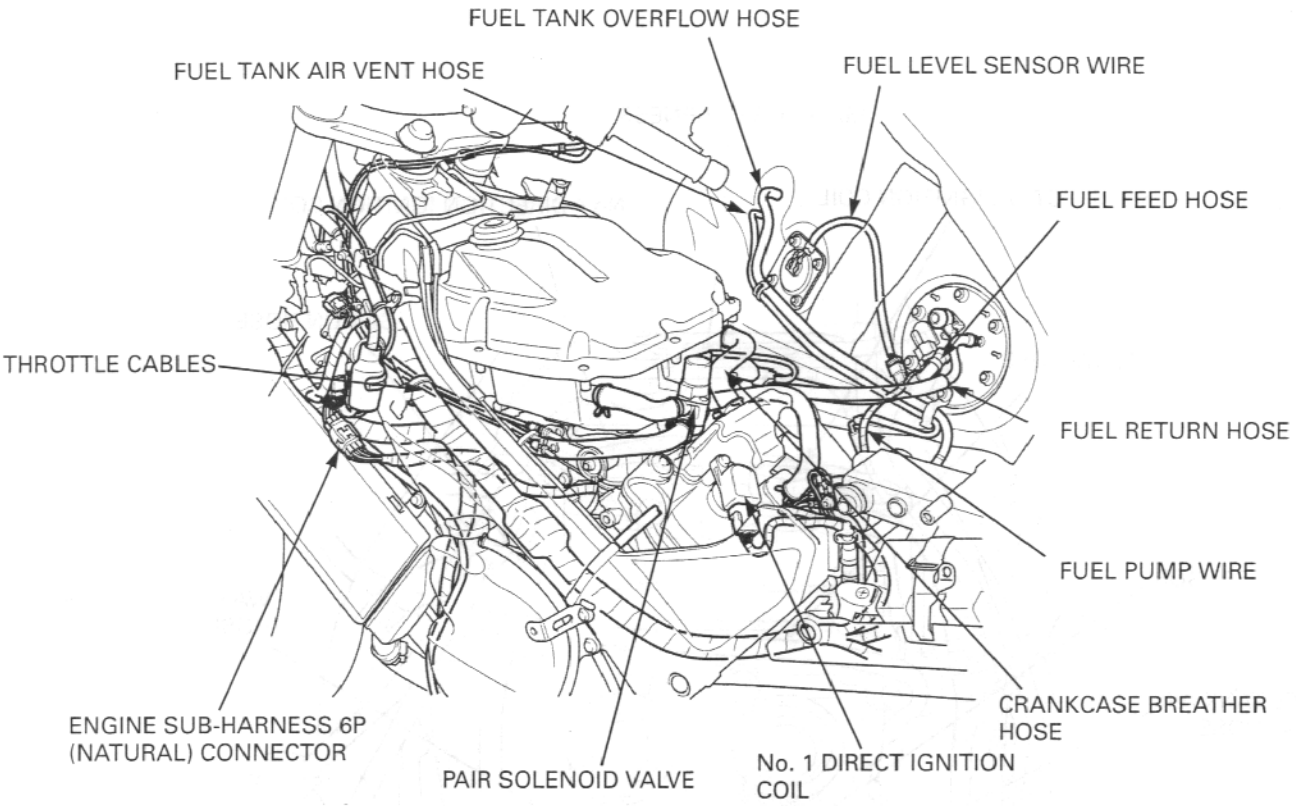
FUEL TANK OVERFLOW HOSE
FUEL TANK AIR VENT HOSE
FUEL LEVEL SENSOR WIRE
FUEL FEED HOSE
THROTTLE CABLES
FUEL RETURN HOSE
FUEL PUMP WIRE
CRANKCASE BREATHER HOSE
ENGINE SUB-HARNESS 6P (NATURAL) CONNECTOR
PAIR SOLENOID VALVE
No. 1 DIRECT IGNITION COIL

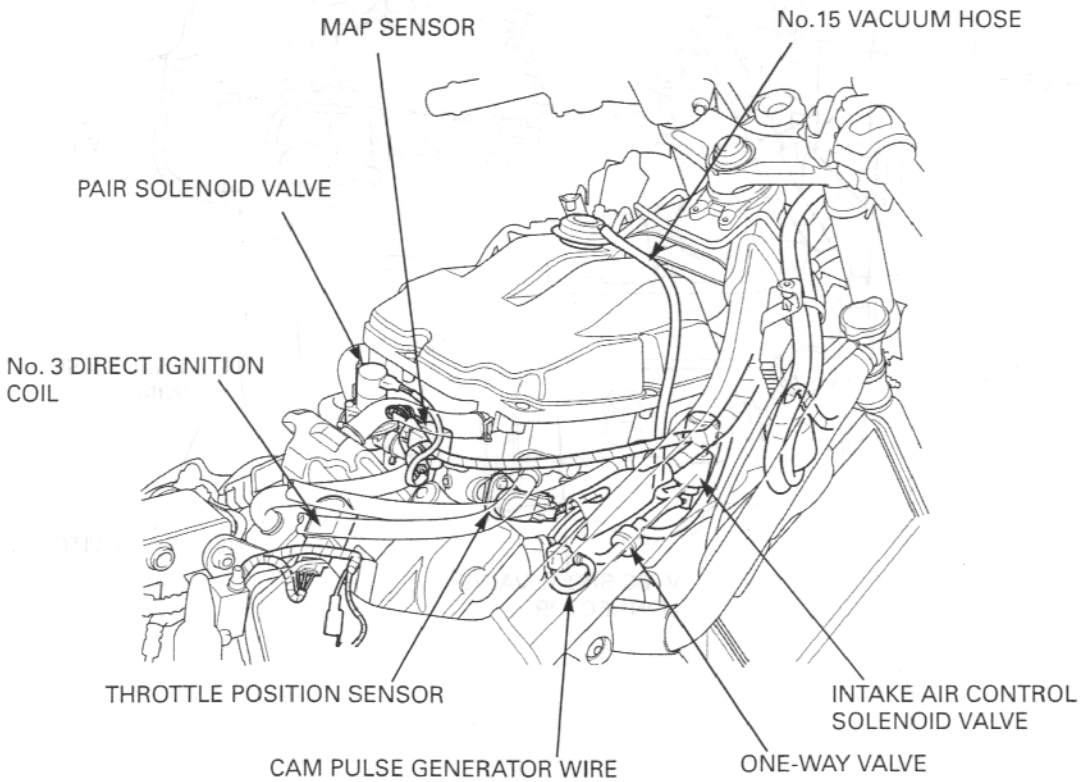
MAP SENSOR
No.15 VACUUM HOSE
PAIR SOLENOID VALVE
No. 3 DIRECT IGNITION COIL
THROTTLE POSITION SENSOR
CAM PULSE GENERATOR WIRE
ONE-WAY VALVE
INTAKE AIR CONTROL SOLENOID VALVE

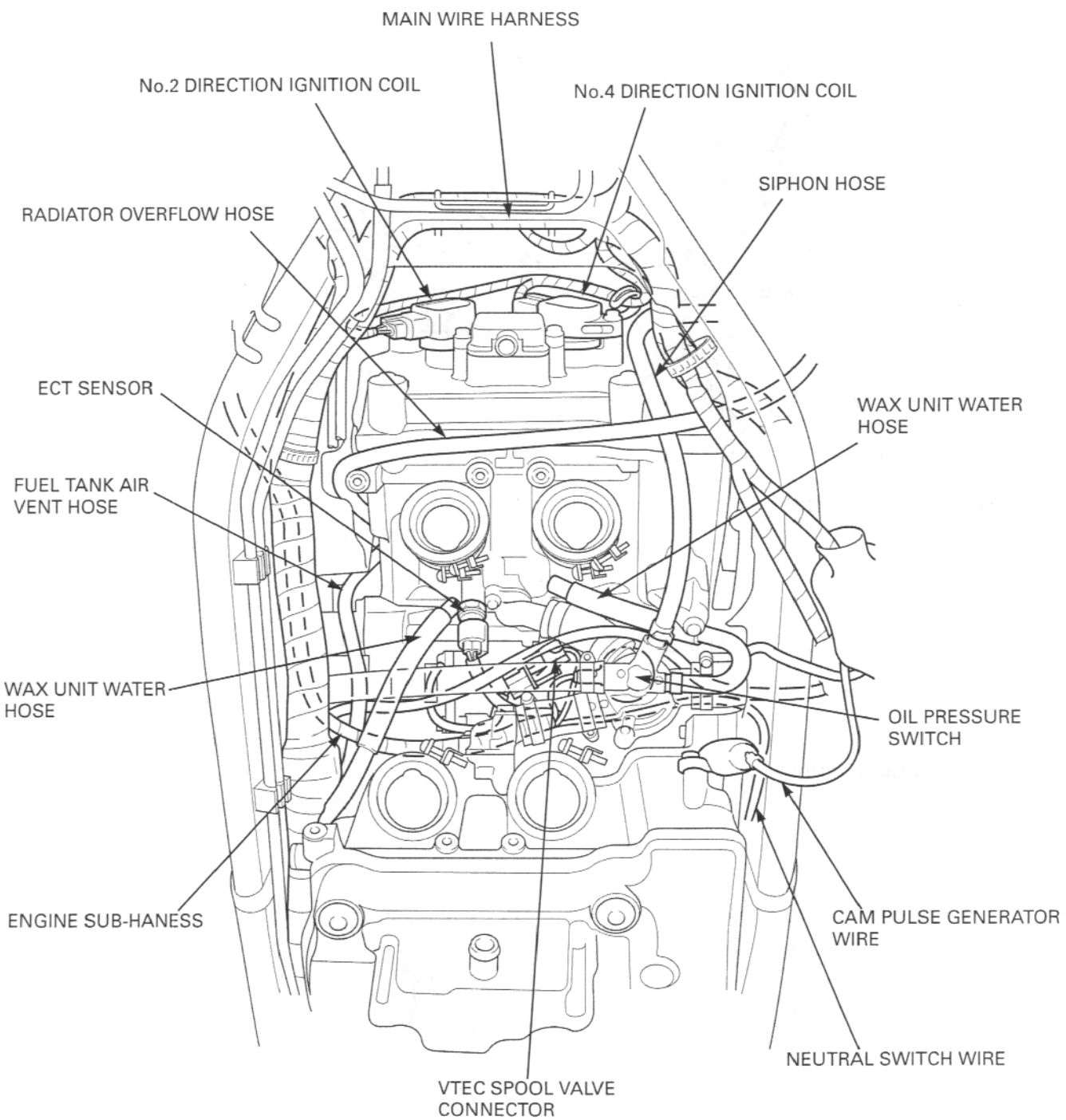
MAIN WIRE HARNESS
No.2 DIRECTION IGNITION COIL
No.4 DIRECTION IGNITION COIL
SIPHON HOSE
RADIATOR OVERFLOW HOSE
ECT SENSOR
WAX UNIT WATER HOSE
FUEL TANK AIR VENT HOSE
WAX UNIT WATER HOSE
OIL PRESSURE SWITCH
ENGINE SUB-HANESS
CAM PULSE GENERATOR WIRE
NEUTRAL SWITCH WIRE
VTEC SPOOL VALVE CONNECTOR

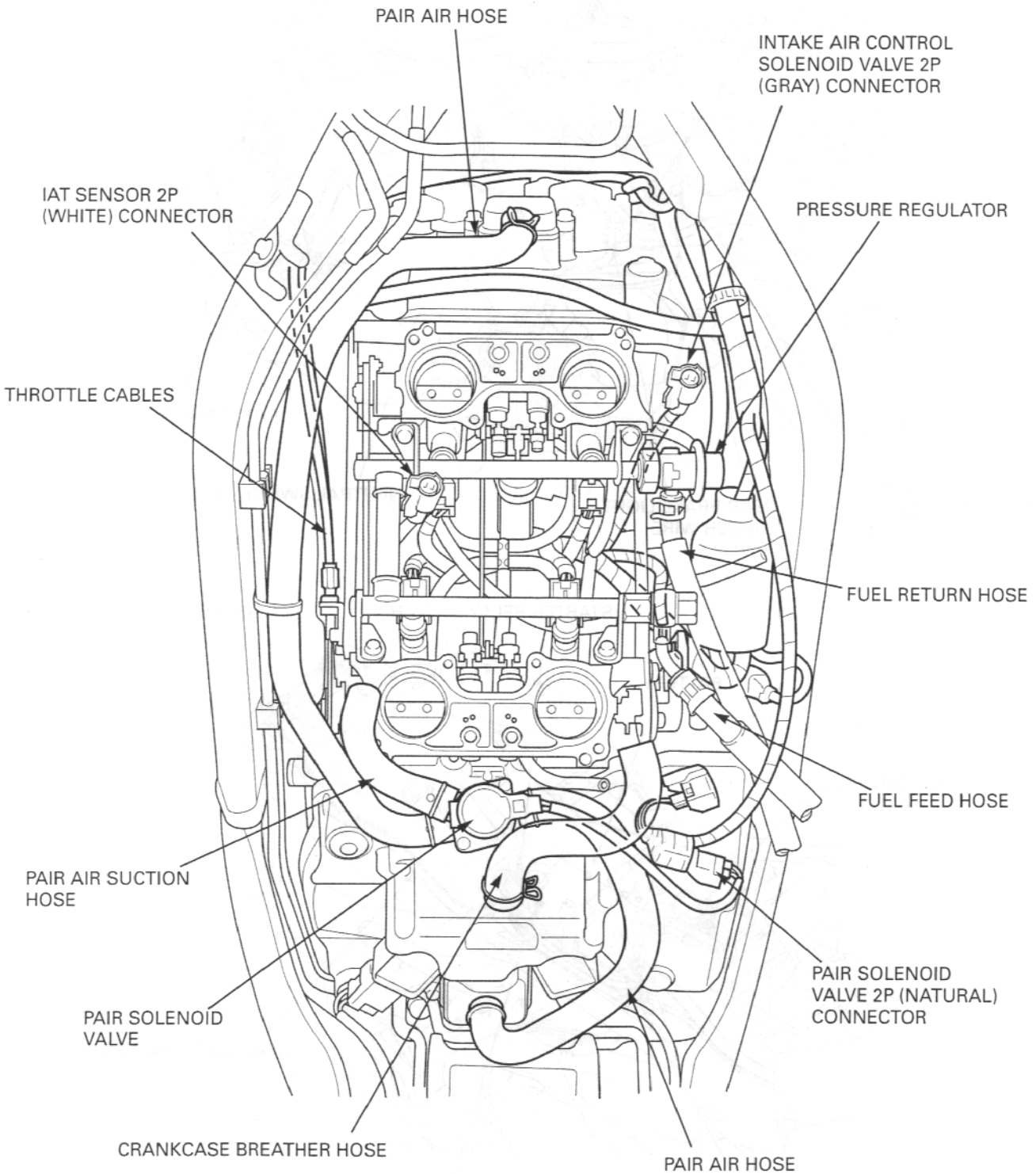
PAIR AIR HOSE
INTAKE AIR CONTROL SOLENOID VALVE 2P (GRAY) CONNECTOR
IAT SENSOR 2P (WHITE) CONNECTOR
PRESSURE REGULATOR
THROTTLE CABLES
FUEL RETURN HOSE
FUEL FEED HOSE
PAIR AIR SUCTION HOSE
PAIR SOLENOID VALVE 2P (NATURAL) CONNECTOR
PAIR SOLENOID VALVE
CRANKCASE BREATHER HOSE
PAIR AIR HOSE

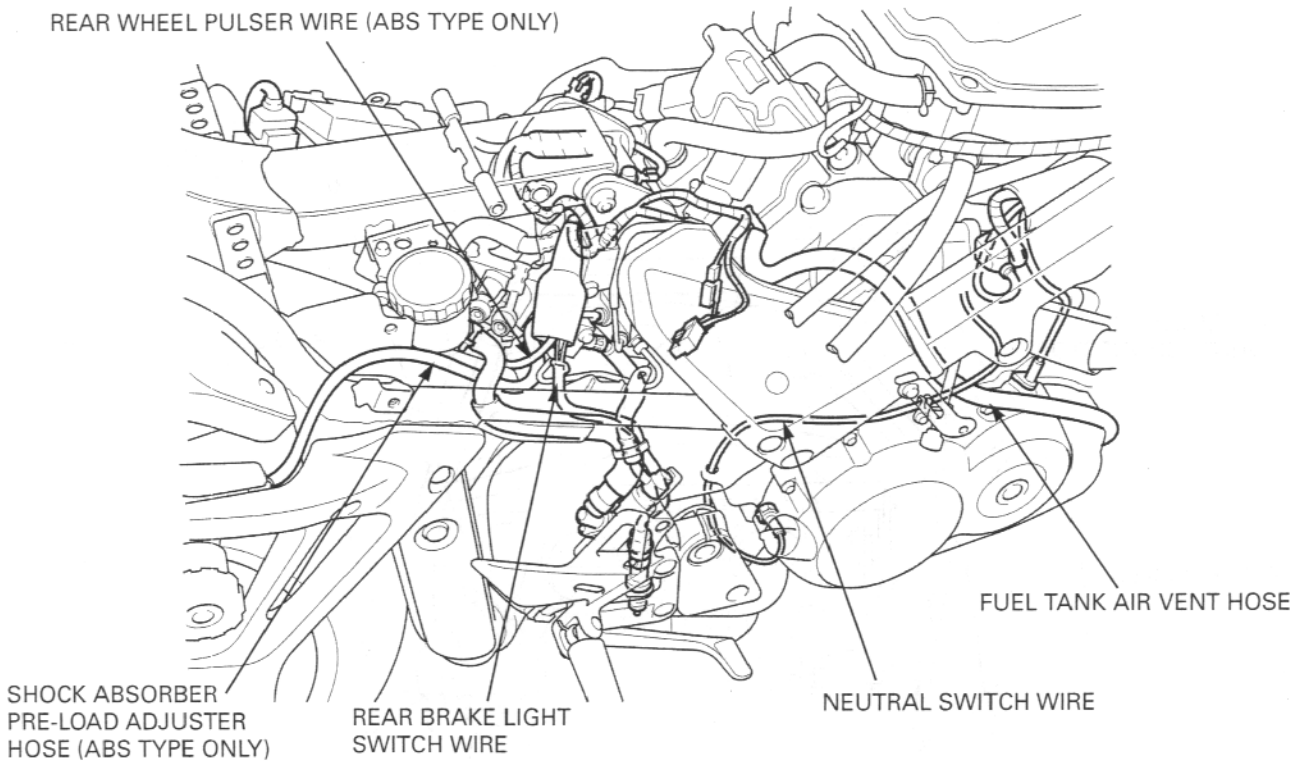
REAR WHEEL PULSER WIRE (ABS TYPE ONLY)
FUEL TANK AIR VENT HOSE
SHOCK ABSORBER PRE-LOAD ADJUSTER HOSE (ABS TYPE ONLY)
REAR BRAKE LIGHT SWITCH WIRE
NEUTRAL SWITCH WIRE

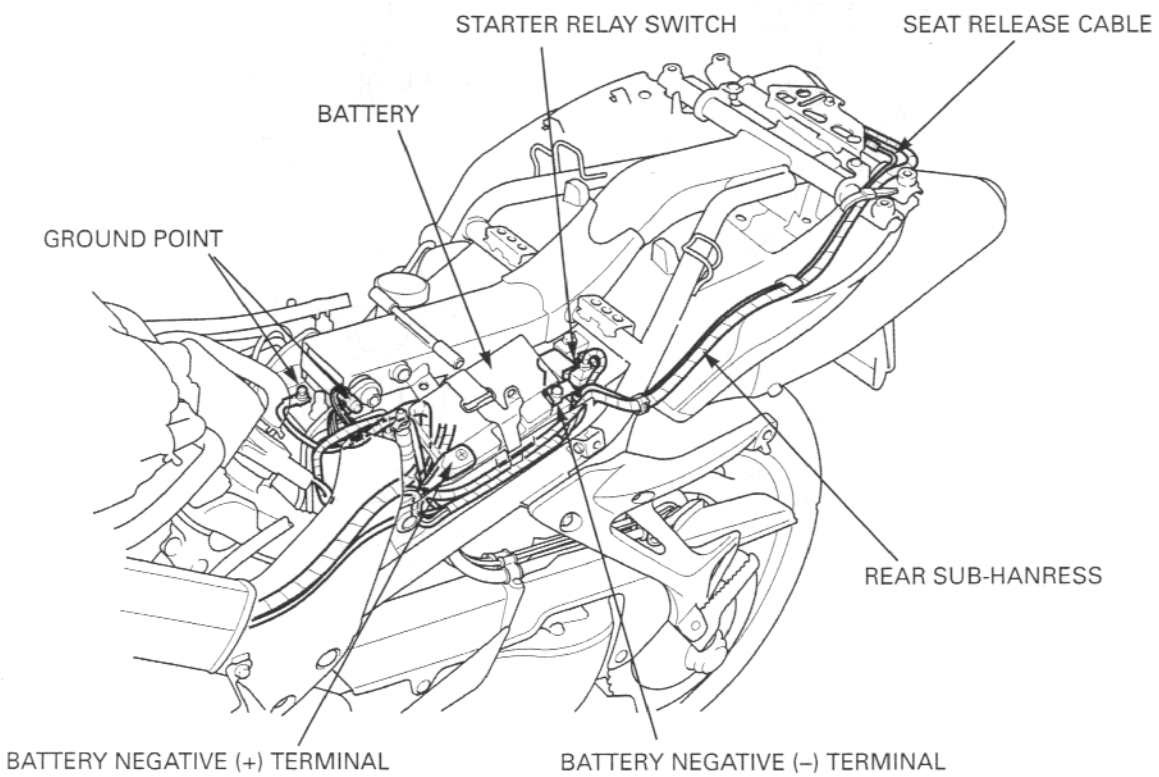
STARTER RELAY SWITCH
SEAT RELEASE CABLE
BATTERY
GROUND POINT
REAR SUB-HANRESS
BATTERY NEGATIVE (+) TERMINAL
BATTERY NEGATIVE (–) TERMINAL

Standard type:

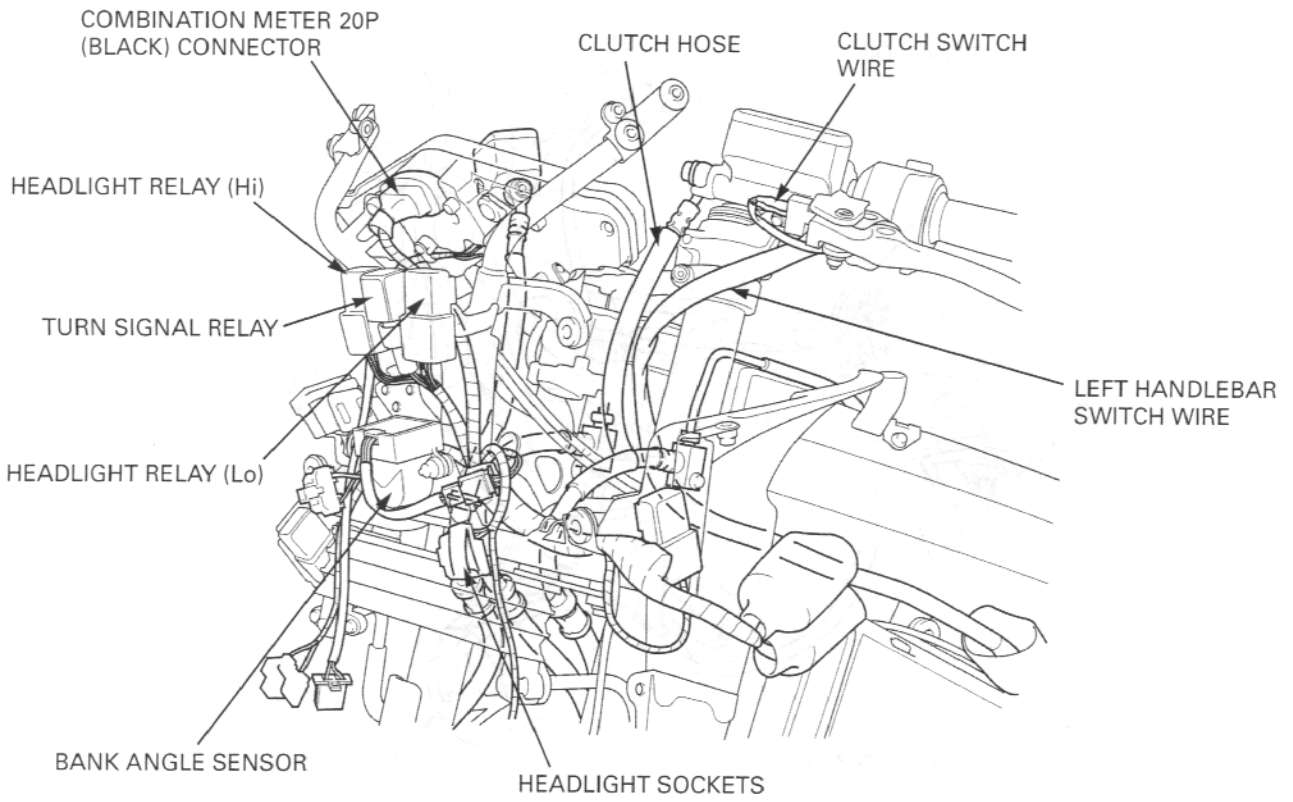

Standard type:

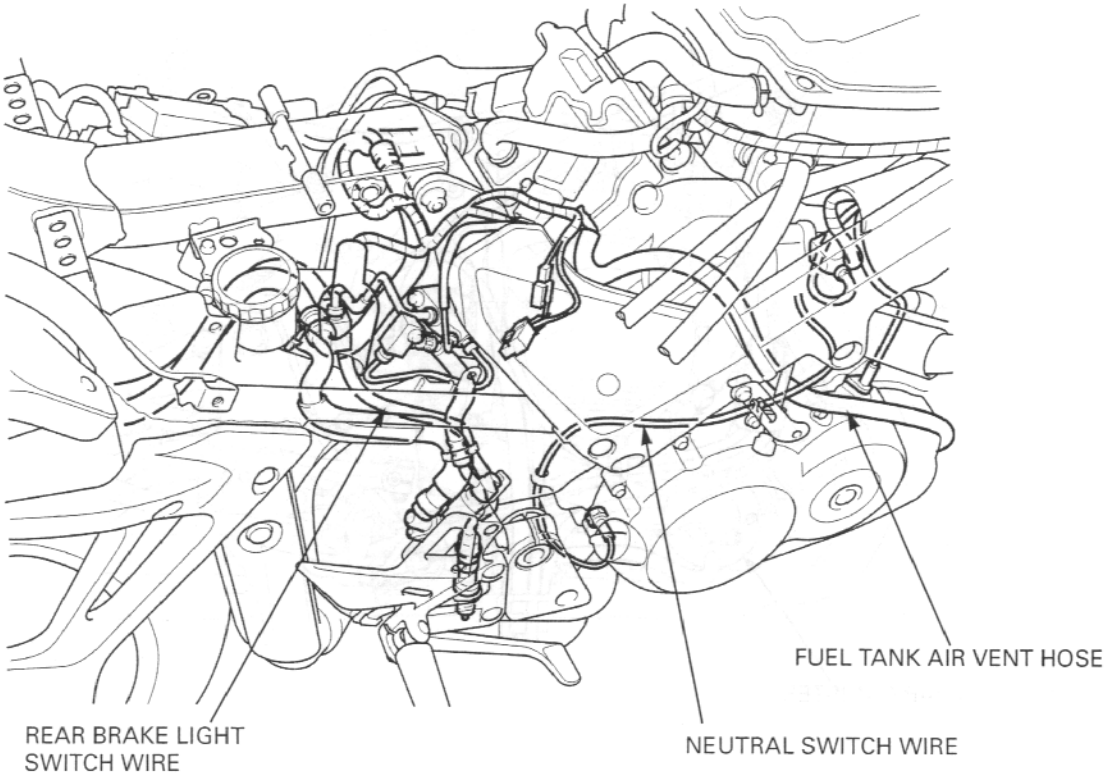

California type:

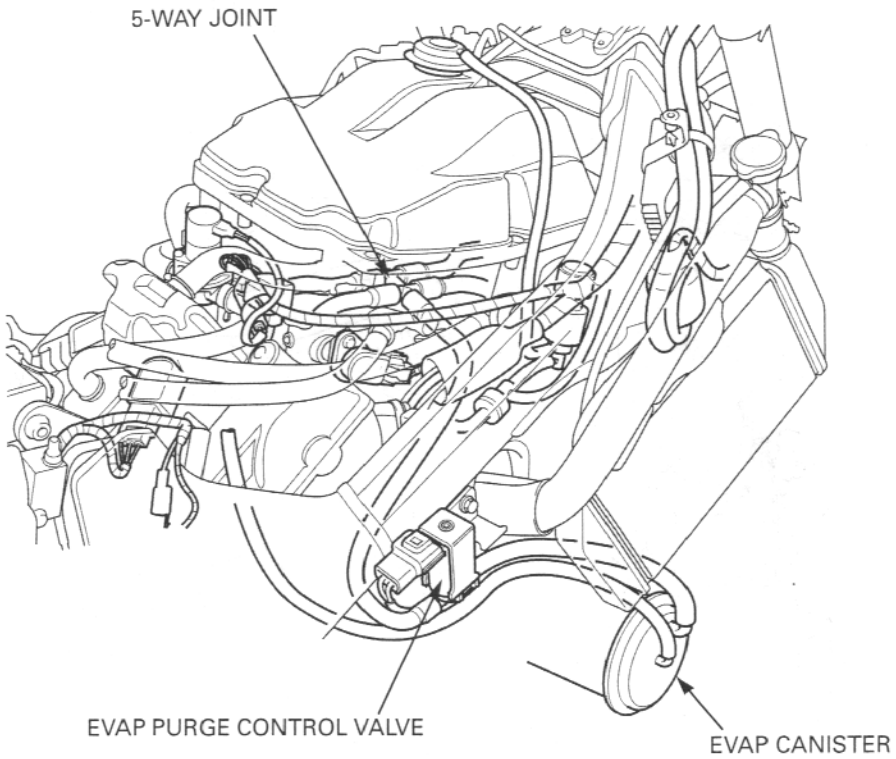

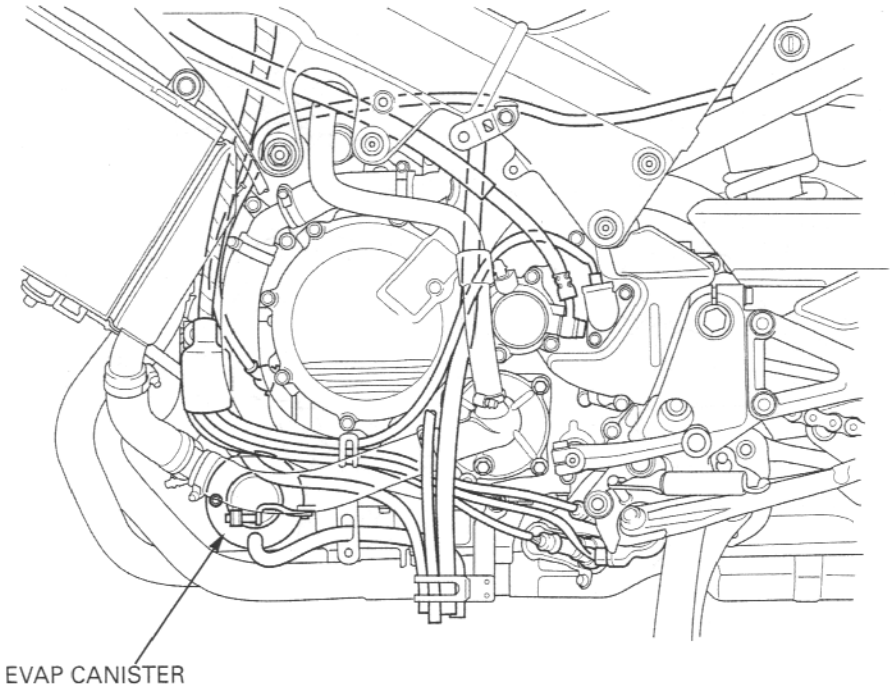

BRAKE PIPE ROUTING

ABS type:

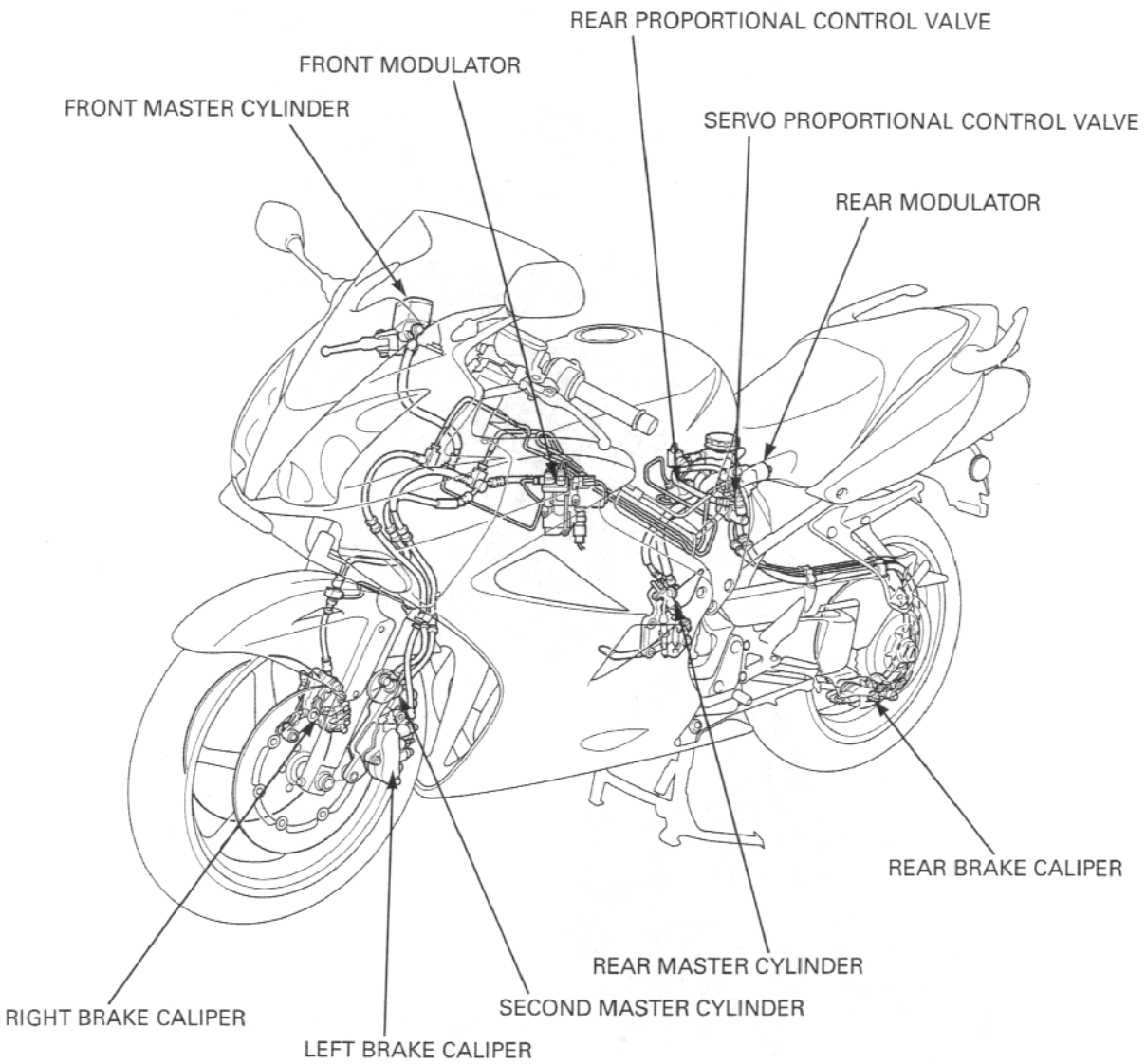

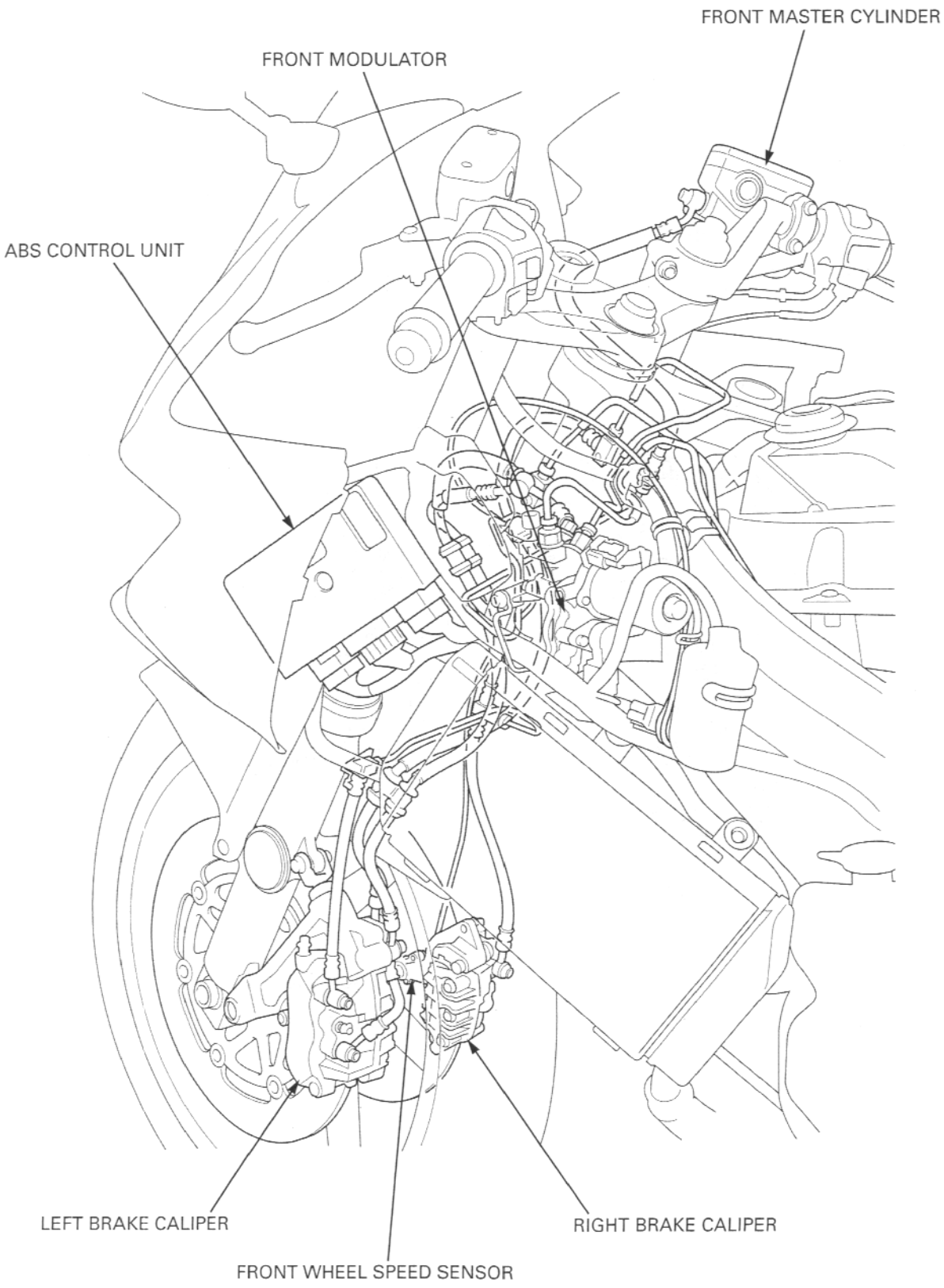
FRONT MASTER CYLINDER
FRONT MODULATOR
ABS CONTROL UNIT
LEFT BRAKE CALIPER
FRONT WHEEL SPEED SENSOR
RIGHT BRAKE CALIPER

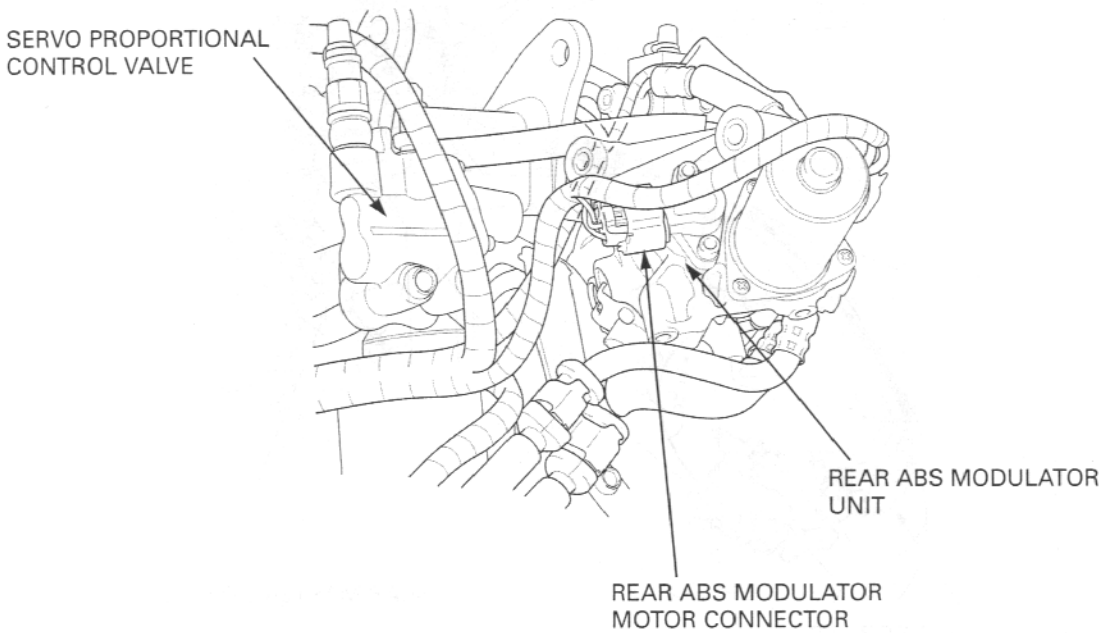
SERVO PROPORTIONAL CONTROL VALVE
REAR ABS MODULATOR UNIT
REAR ABS MODULATOR MOTOR CONNECTOR

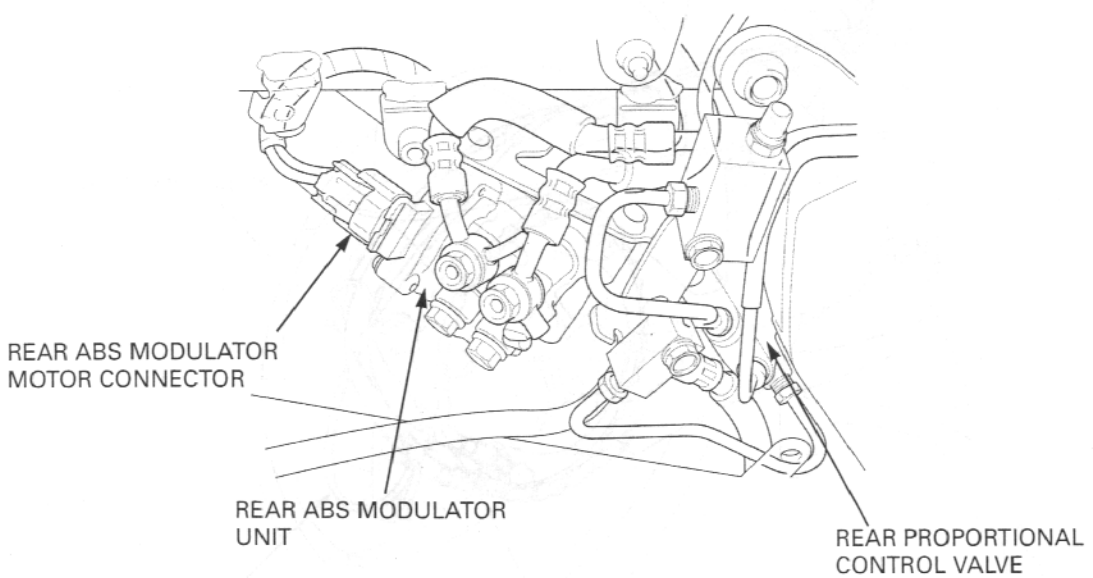
REAR ABS MODULATOR MOTOR CONNECTOR
REAR ABS MODULATOR UNIT
REAR PROPORTIONAL CONTROL VALVE

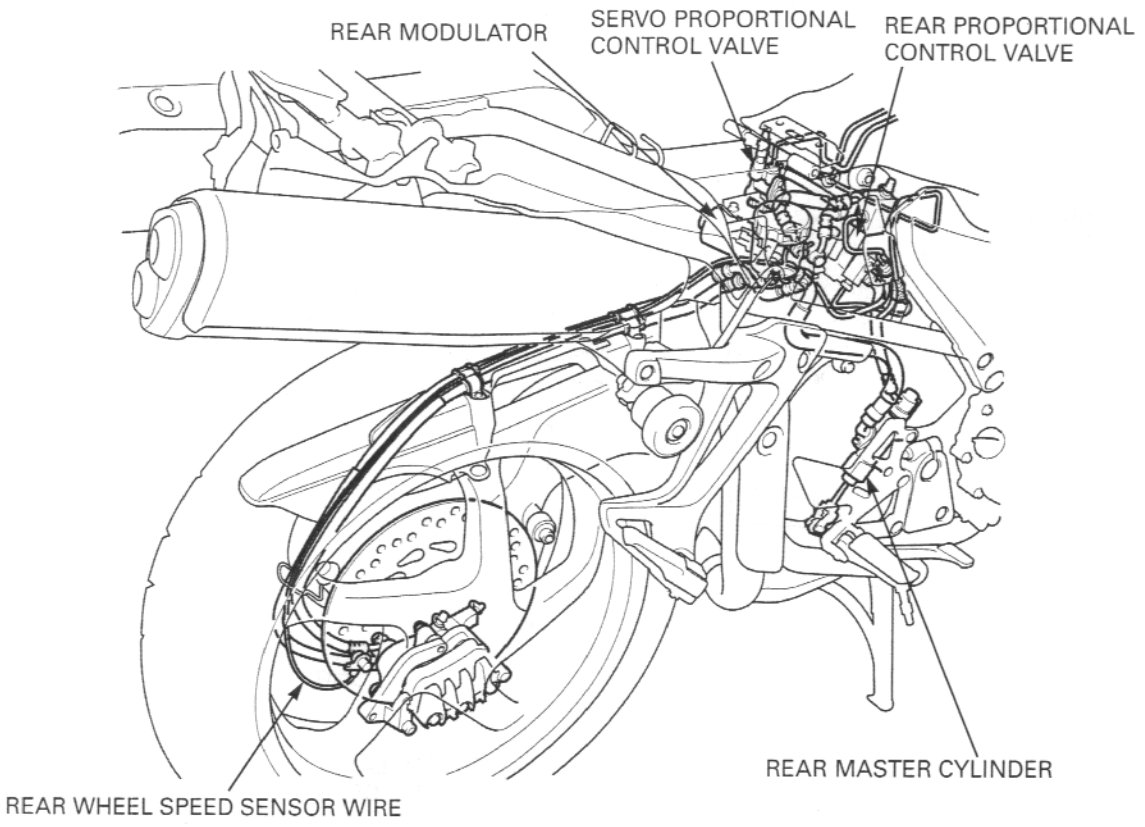
REAR MODULATOR
SERVO PROPORTIONAL CONTROL VALVE
REAR PROPORTIONAL CONTROL VALVE
REAR MASTER CYLINDER
REAR WHEEL SPEED SENSOR WIRE

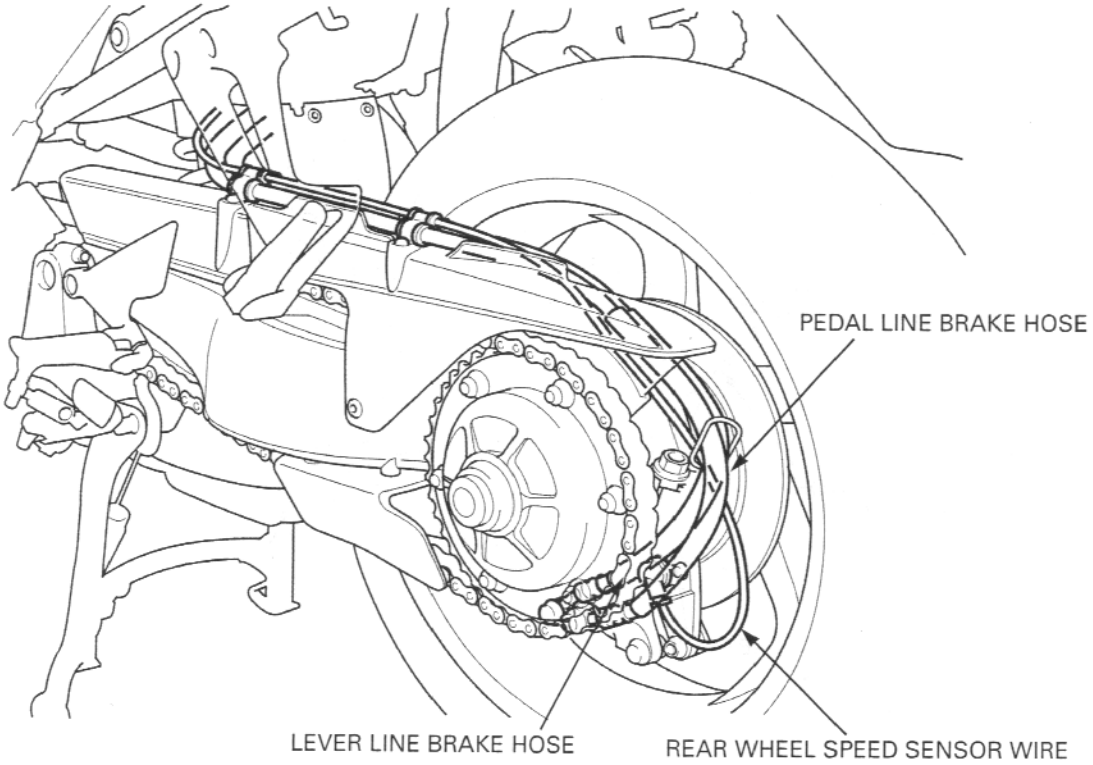
PEDAL LINE BRAKE HOSE
LEVER LINE BRAKE HOSE
REAR WHEEL SPEED SENSOR WIRE

Standard type:

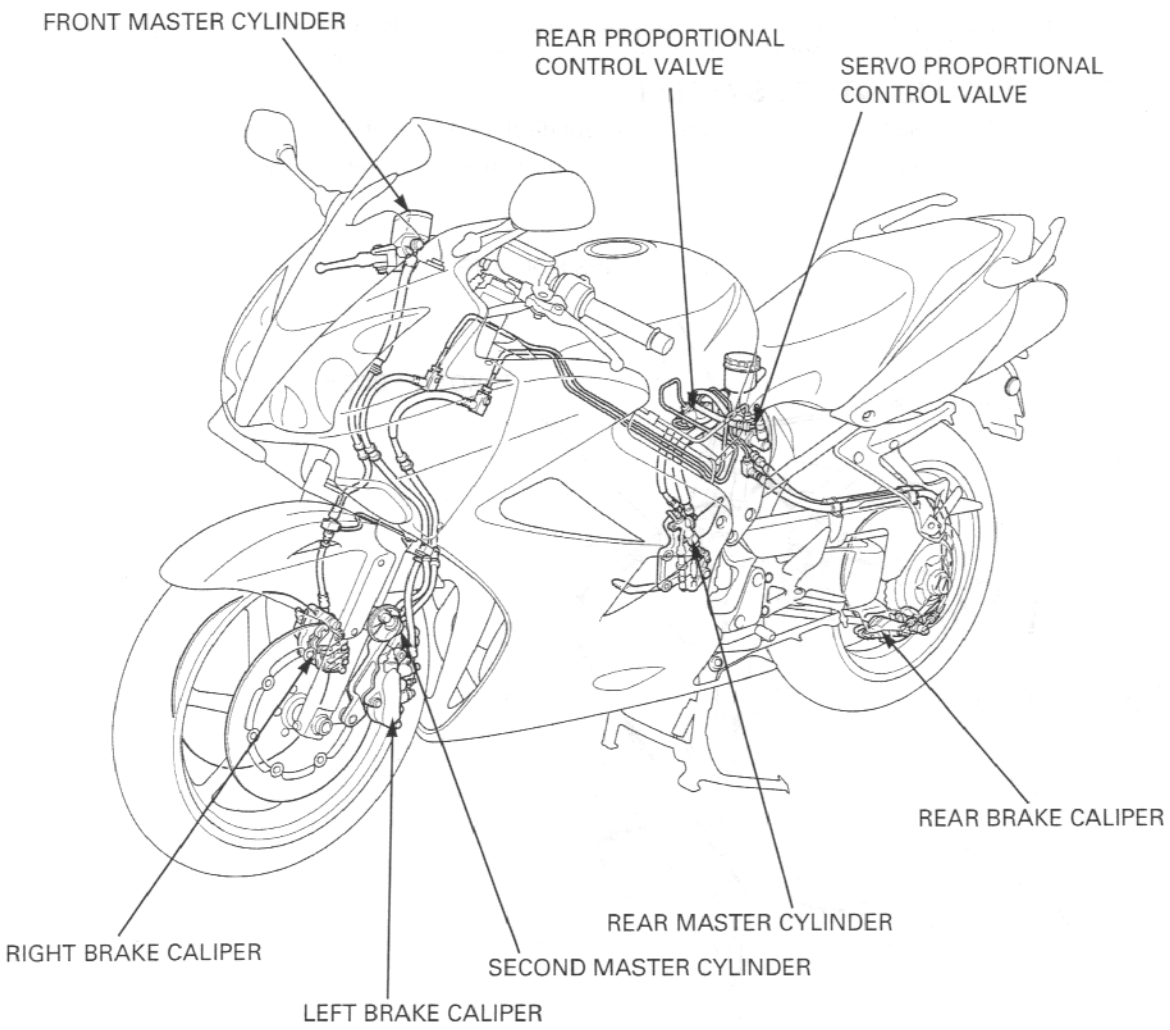

EMISSION CONTROL SYSTEMS

The U.S. Environmental Protection Agency, California Air Resources Board (CARB) and Transport Canada require manufacturers to certify that their motorcycle comply with applicable exhaust emissions standards during their useful life, when operated and maintained according to the instructions provided, and that motorcycles built after January 1, 1983 comply with applicable noise emission standards for one year or 3,730 miles (6,000 km) after the time of sale to the ultimate purchaser, when operated and maintained according to the instructions provided. Compliance with the terms of the DIstributor's Limited Warranty for Honda Motorcycle Emission Control Systems is necessary in order to keep the emissions system warranty in effect.

SOURCE OF EMISSIONS

The combustion process produces carbon monoxide, oxides of nitrogen and hydrocarbons. Control of hydrocarbons and oxides of nitrogen is very important because, under certain conditions, they react to form photochemical smog when subject to sunlight. Carbon monoxide does not react in the same way, but it is toxic.

Honda Motor Co., Ltd. utilizes PGM-FI, two three-way catalytic converters, a pulse secondary air injection system and a heated oxygen sensor to reduce carbon monoxide, hydrocarbons, and oxides of nitrogen.

CRANKCASE EMISSION CONTROL SYSTEM

The engine is equipped with a closed crankcase system to prevent discharging crankcase emissions into the atmosphere.

Blow-by gas is returned to the combustion chamber through the air cleaner and throttle body.

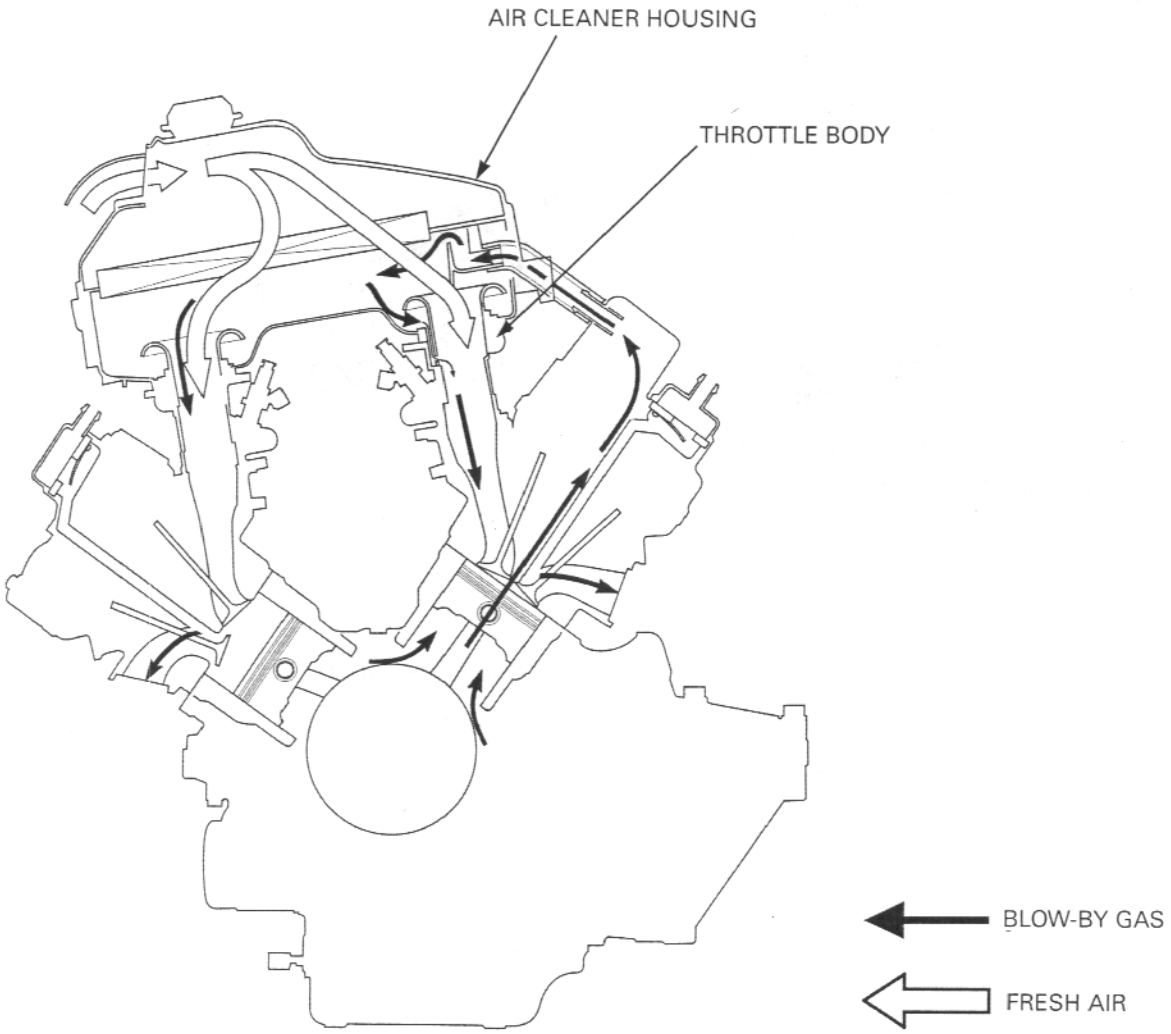

EXHAUST EMISSION CONTROL SYSTEM (SECONDARY AIR SUPPLY SYSTEM)

The exhaust emission control system uses a lean fuel injection setting, and no adjustments should be made except idle speed adjustment with the throttle stop screw. The exhaust emission control system is separate from the crank case emission control system.

The exhaust emission control system includes of a secondary air supply system which introduces filtered air into the exhaust gases in the exhaust port. Fresh air is drawn into the exhaust port by the function of the PAIR (Pulse Secondary Air Injection) control valve.

This charge of fresh air promotes burning of the unburned exhaust gases and changes a considerable amount of hydrocarbons and carbon monoxide into relatively harmless carbon dioxide and water vapor.

The reed valve prevents reverse air flow through the system. The PAIR control valve is operated by the solenoid valve. The solenoid valve is controlled by the PGM-FI unit, and the fresh air passage is opened/closed according the running condition (ECT/IAT/TP/MAP sensor and engine revolution).

No adjustments to the secondary air supply system should be made, although periodic inspection of the components is recommended.

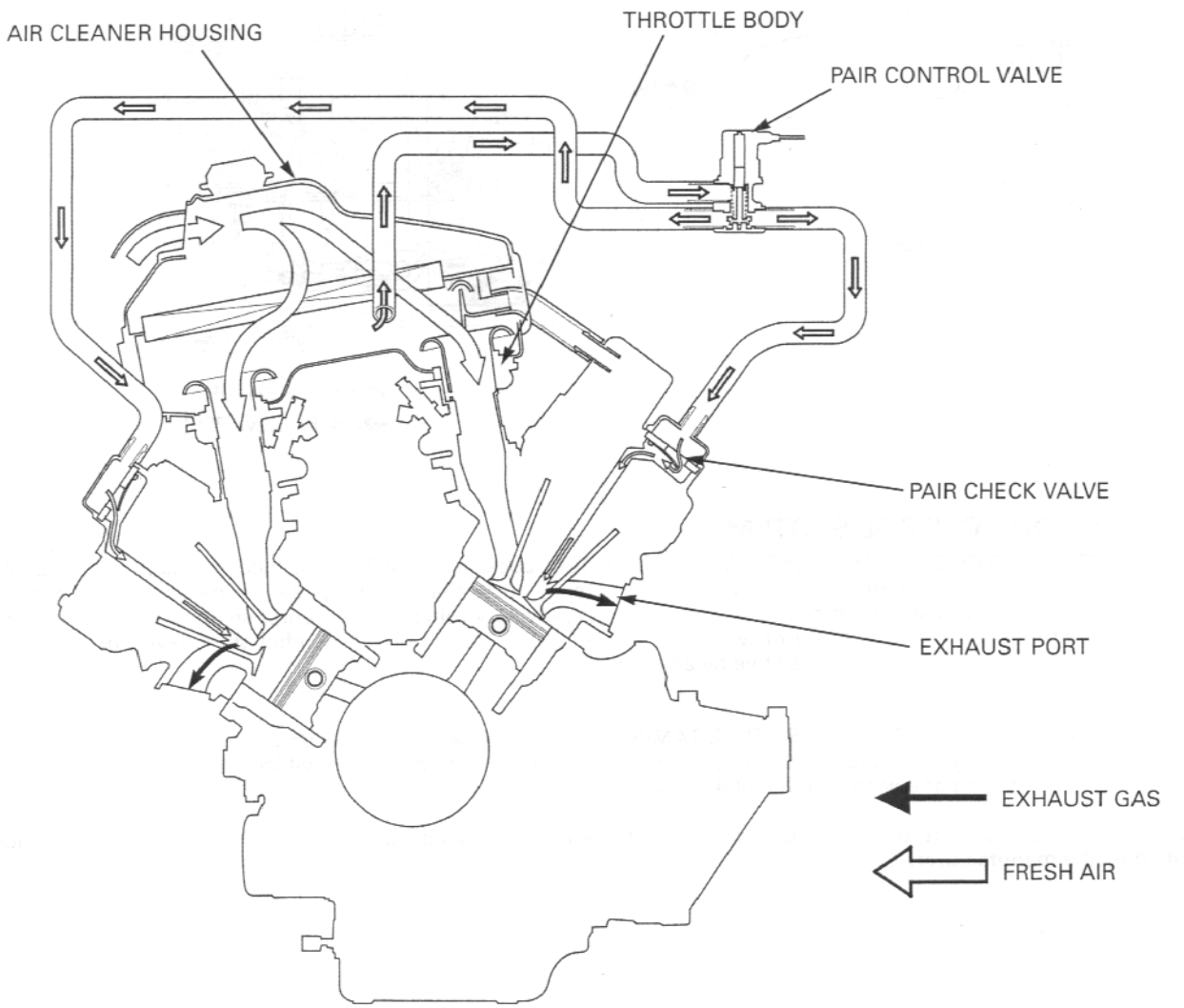

This motorcycle is also equipped with two three-way catalytic converters, and two heated oxygen sensors.

The three-way catalytic converters are in the exhaust system. Through chemical reactions, they convert HC, CO, and NOx in the engine's exhaust to carbon dioxide (CO_2), dinitrogen (N_2), and water vapor.

No adjustment to these systems should be made although periodic inspection of the components is recommended.

EVAPORATIVE EMISSION CONTROL SYSTEM (CALIFORNIA TYPE ONLY)

This model complies with California Air Resources Board evaporative emission requirements.

Fuel vapor from the fuel tank is routed into the evaporative emission (EVAP) canister where it is absorbed and stored while the engine is stopped. When the engine is running and the evaporative emission (EVAP) purge control solenoid valve is open, fuel vapor in the EVAP canister is drawn into the engine through the throttle body.

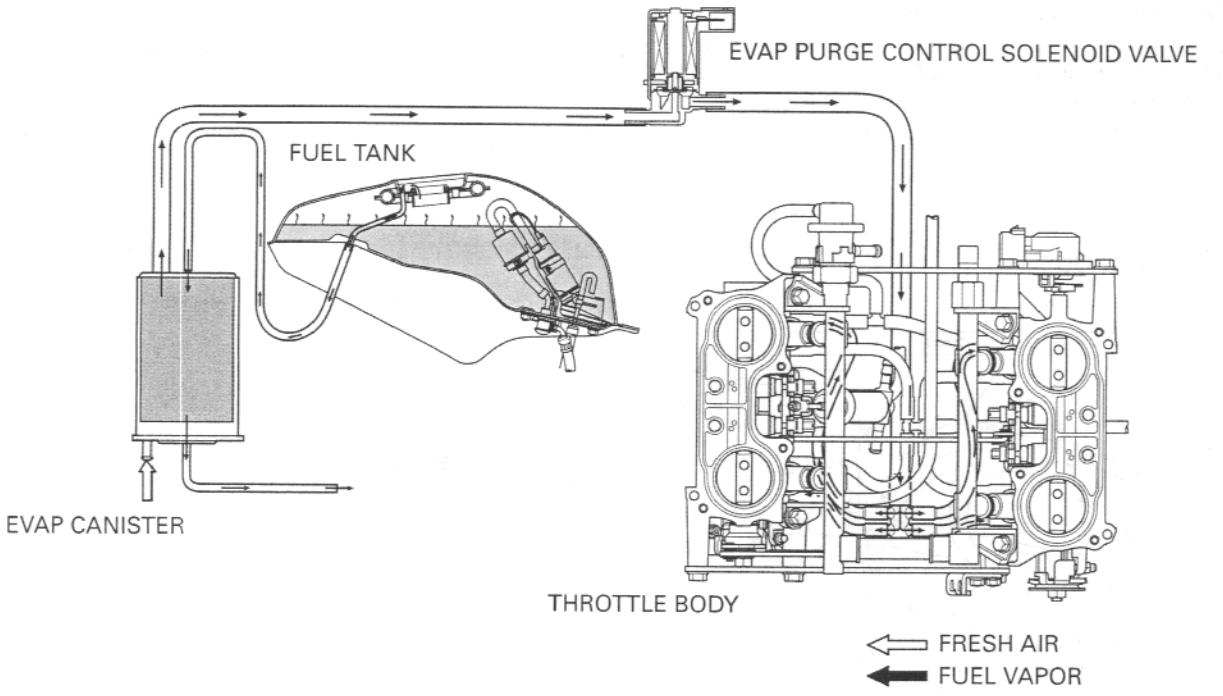

NOISE EMISSION CONTROL SYSTEM

TAMPERING WITH THE NOISE CONTROL SYSTEM IS PROHIBITED: Local law prohibits the following acts or the causing thereof: (1) The removal or rendering inoperative by any person, other than for purposes of maintenance, repair or replacement, of any device or element of design incorporated into any new vehicle for the purpose of noise control prior to its sale or delivery to the ultimate purchaser or while it is in use; (2) the use of the vehicle after such device or element of design has been removed or rendered inoperative by any person.

AMONG THOSE ACTS PRESUMED TO CONSTITUTE TAMPERING ARE THE ACTS LISTED BELOW:

1. Removal of, or puncturing of the muffler, baffles,header pipes or any other component which conducts exhaust gases.
2. Removal of, or puncturing of any part of the intake system.
3. Lack of proper maintenance.
4. Replacing any moving parts of the vehicle, or parts of the exhaust or intake system, with parts other then those specified by the manufacturer.

EMISSION CONTROL INFORMATION LABELS (U.S.A. ONLY)

An Emission Control Information Label is located on the air cleaner housing as shown.
The fuel tank must be opened to read it. Refer to page 3-5 for fuel tank opening.

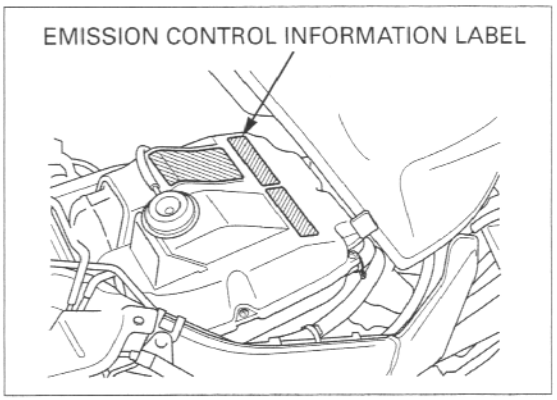

VACUUM HOSE ROUTING DIAGRAM LABEL (CALIFORNIA TYPE ONLY)

The vacuum Hose Routing Diagram Label is on the air cleaner housing cover as shown.
The fuel tank must be opened to read it. Refer to page 3-5 for fuel tank opening.

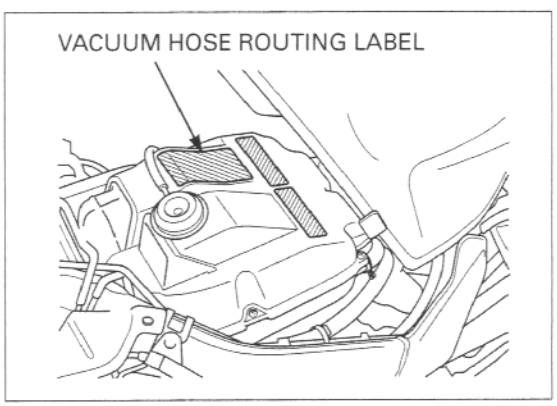

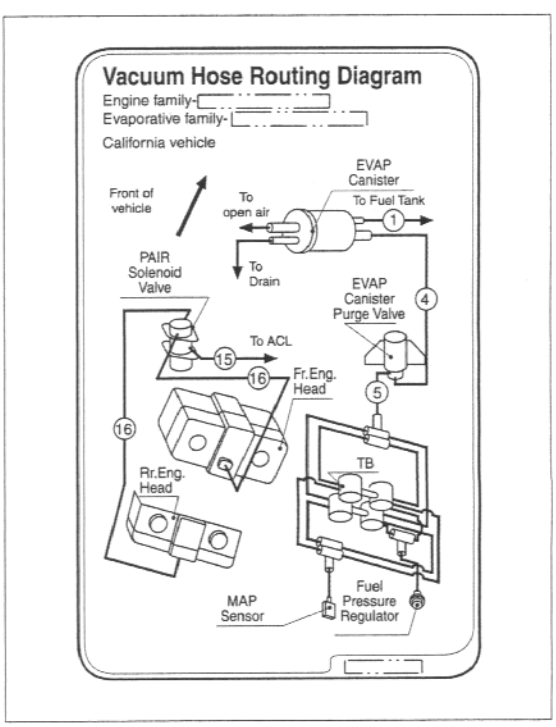

MEMO

2. FRAME/BODY PANELS/EXHAUST SYSTEM

BODY PANEL LOCATIONS 2-2
SERVICE INFORMATION 2-3
TROUBLESHOOTING 2-3
TRIM CLIPS 2-4
SEAT STOPPER INSTALLATION 2-4
SEAT 2-5
REAR COWL 2-5
SIDE COWL 2-8
UPPER COWL 2-12
FRONT FENDER 2-17
REAR FENDER 2-17
SEAT RAIL 2-23
MUFFLER/EXHAUST PIPE 2-28

BODY PANEL LOCATIONS

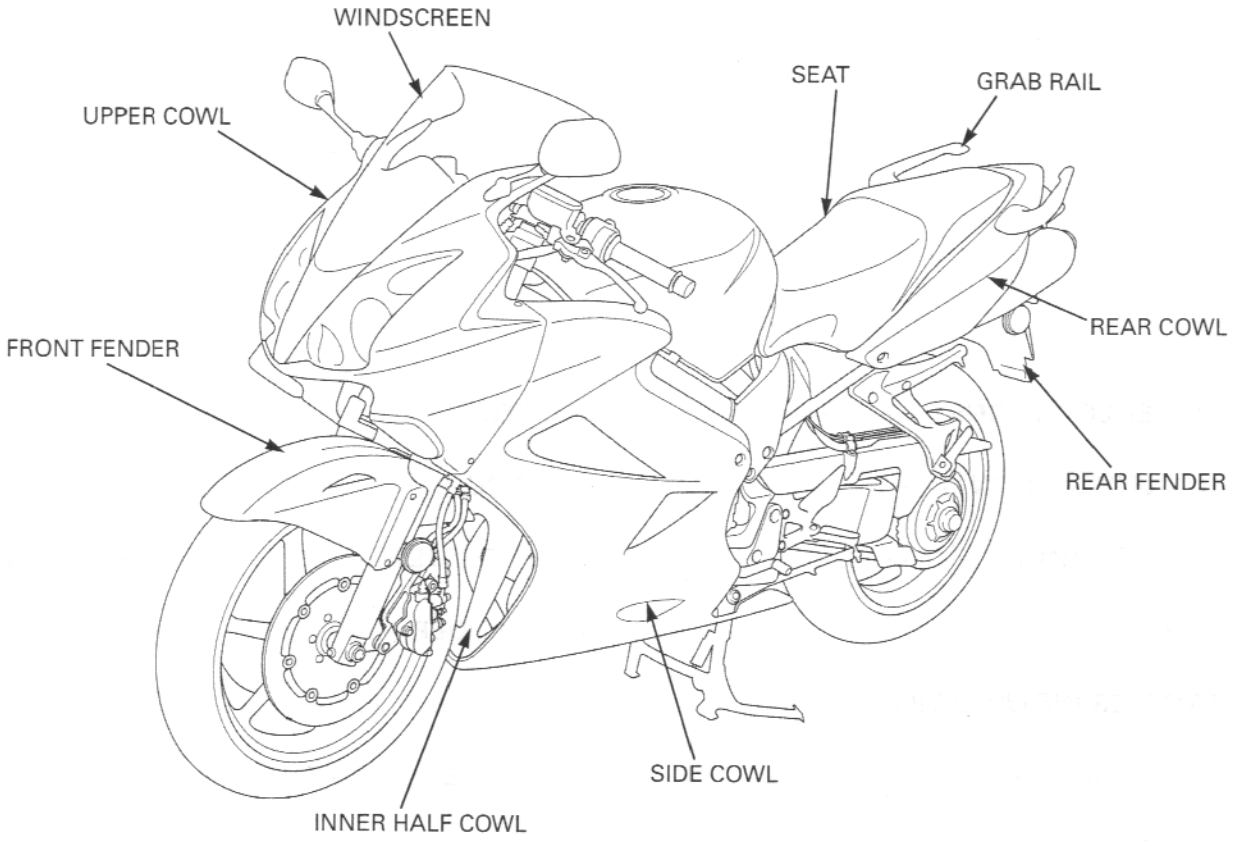

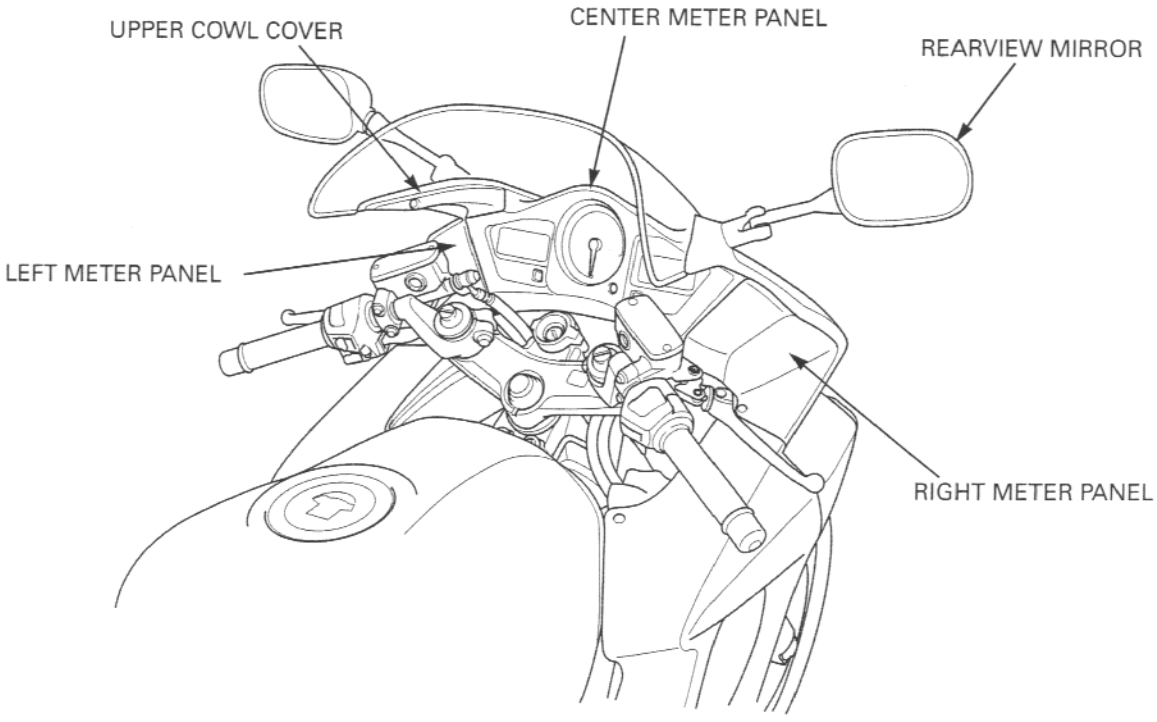

SERVICE INFORMATION

GENERAL

- Work in a well ventilated area. Smoking or allowing flames or sparks in the work area or where gasoline is stored can cause a fire or explosion.
- This section covers removal and installation of the body panels and exhaust system.
- Serious burns may result if the exhaust system is not allowed to cool before components are removed or serviced.
- Always replace the exhaust pipe gaskets after removing the exhaust pipe from the engine.
- When installing the exhaust system, loosely install all of the exhaust pipe fasteners. Always tighten the exhaust clamps first, then tighten the mounting fasteners. If you tighten the mounting fasteners first, the exhaust pipe may not seat properly.
- Always inspect the exhaust system for leaks after installation.

TORQUE VALUES

Upper cowl pan screw	2 N·m (0.15 kgf·m, 1.1 lbf·ft)
Side cowl pan screw	2 N·m (0.15 kgf·m, 1.1 lbf·ft)
Inner half cowl pan screw	2 N·m (0.15 kgf·m, 1.1 lbf·ft)
Rear cowl pan screw	2 N·m (0.15 kgf·m, 1.1 lbf·ft)
Grab rail socket bolt	22 N·m (2.2 kgf·m, 16 lbf·ft)
Upper cowl stay mounting nut, 10 mm	64 N·m (6.5 kgf·m, 47 lbf·ft)
Upper cowl stay mounting nut, 8 mm	47 N·m (4.8 kgf·m, 35 lbf·ft)
Seat rail lower mounting nut	44 N·m (4.5 kgf·m, 33 lbf·ft)
Seat rail upper mounting flange nut	54 N·m (5.5 kgf·m, 40 lbf·ft)
Exhaust pipe joint special nut	12 N·m (1.2 kgf·m, 9 lbf·ft)
Exhaust pipe flange nut	21 N·m (2.1 kgf·m, 15 lbf·ft)
Pillion footpeg bracket socket bolt	32 N·m (3.3 kgf·m, 24 lbf·ft)

TROUBLESHOOTING

Excessive exhaust noise
- Broken exhaust system
- Exhaust gas leak

Poor performance
- Deformed exhaust system
- Exhaust gas leak
- Clogged muffler

TRIM CLIPS

REMOVAL

Push the center of the trim clip pin.

Remove the trim clip.

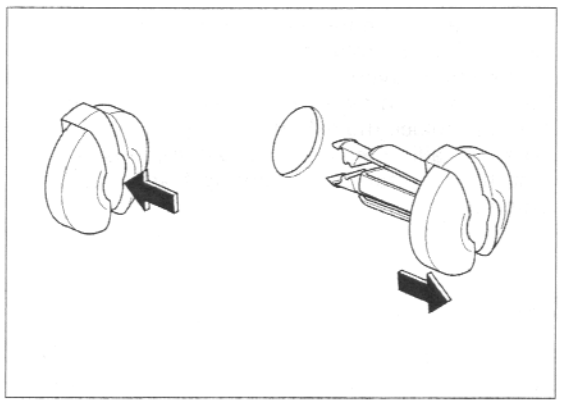

NSTALLATION

Raise the center pin by pushing the retaining tabs back.

Install the trim clip.

Push the center pin until the pin flush with the outer casing.

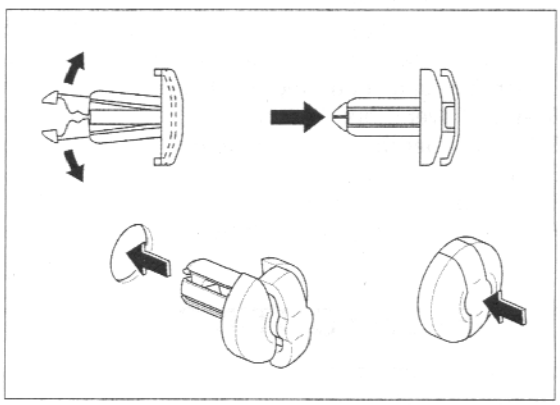

SEAT COWL INSTALLATION

Remove the following:

- Seat (page 2-5)
- Grab rails (page 2-5)

Install the seat cowl onto the seat as shown.

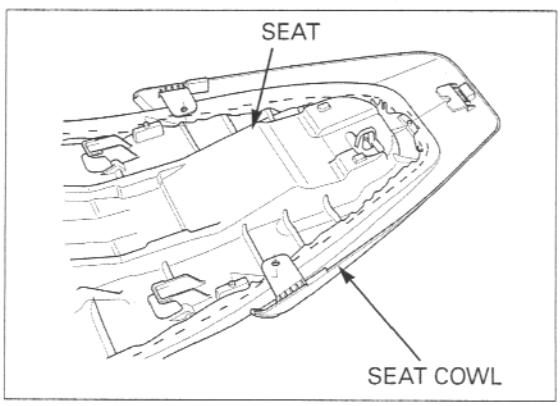

Install the rear cowl covers onto the grab rail mounting holes.

Install the seat (page 2-5).

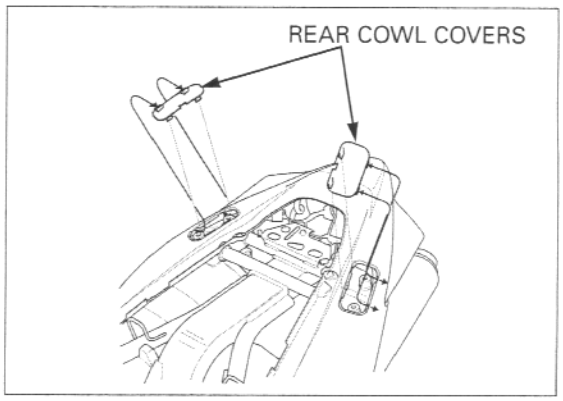

SEAT

REMOVAL

Unhook the seat with the ignition key.

Pull the seat back and remove it.

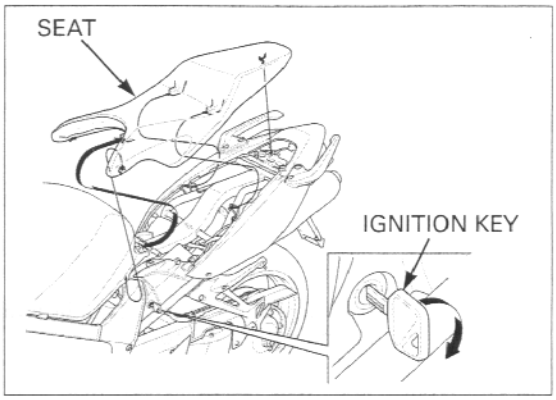

INSTALLATION

Install the seat while aligning its hooks with the retainers on the seat rail.
Push the seat forward, then down to lock it.

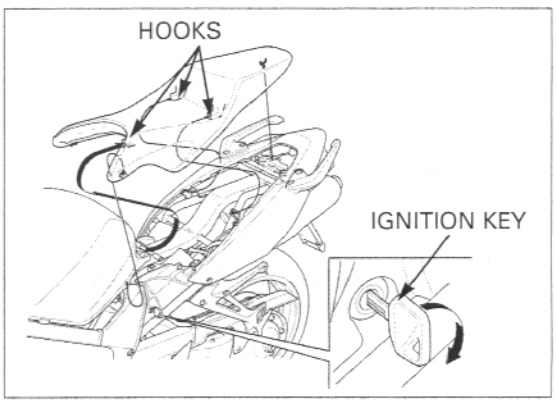

REAR COWL

REMOVAL

Remove the seat (page 2-5).

Remove the four bolt caps, socket bolts and washers.
Remove the grab rails.

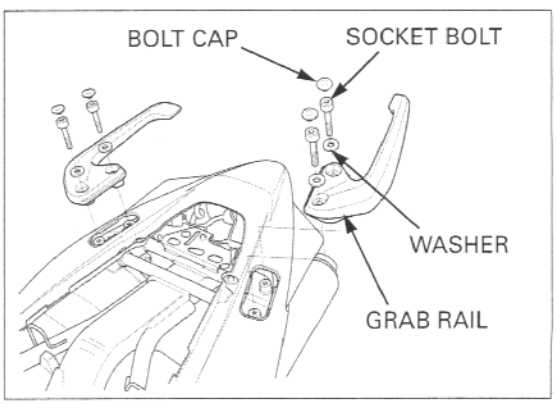

Remove the two special 6 mm screws and two 5 mm pan screws.

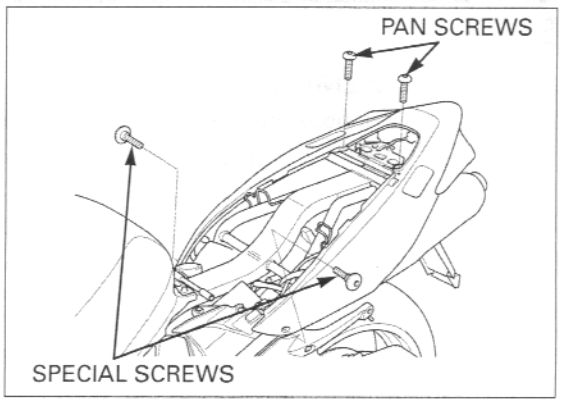

Disconnect the rear brake/tail light connectors and turn signal connectors.

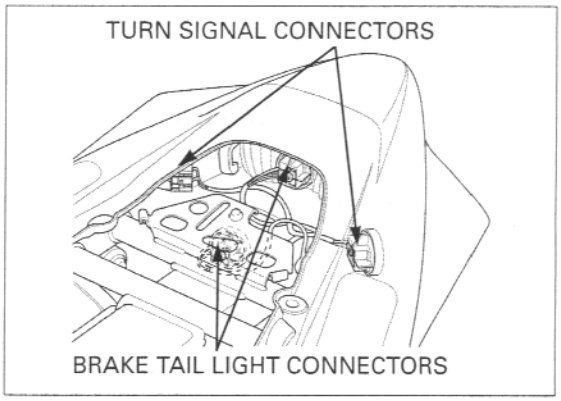

Carefully pulling the both sides of the rear cowl, then remove it from the seat rail.

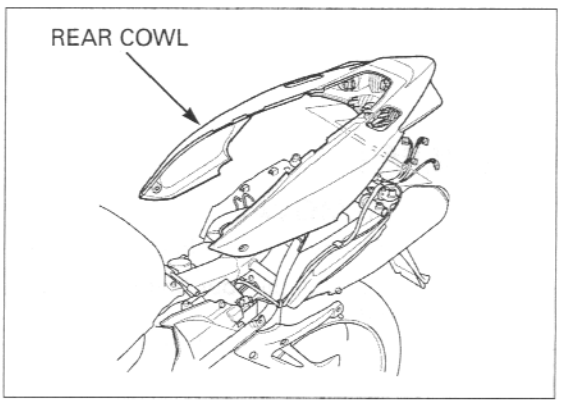

INSTALLATION

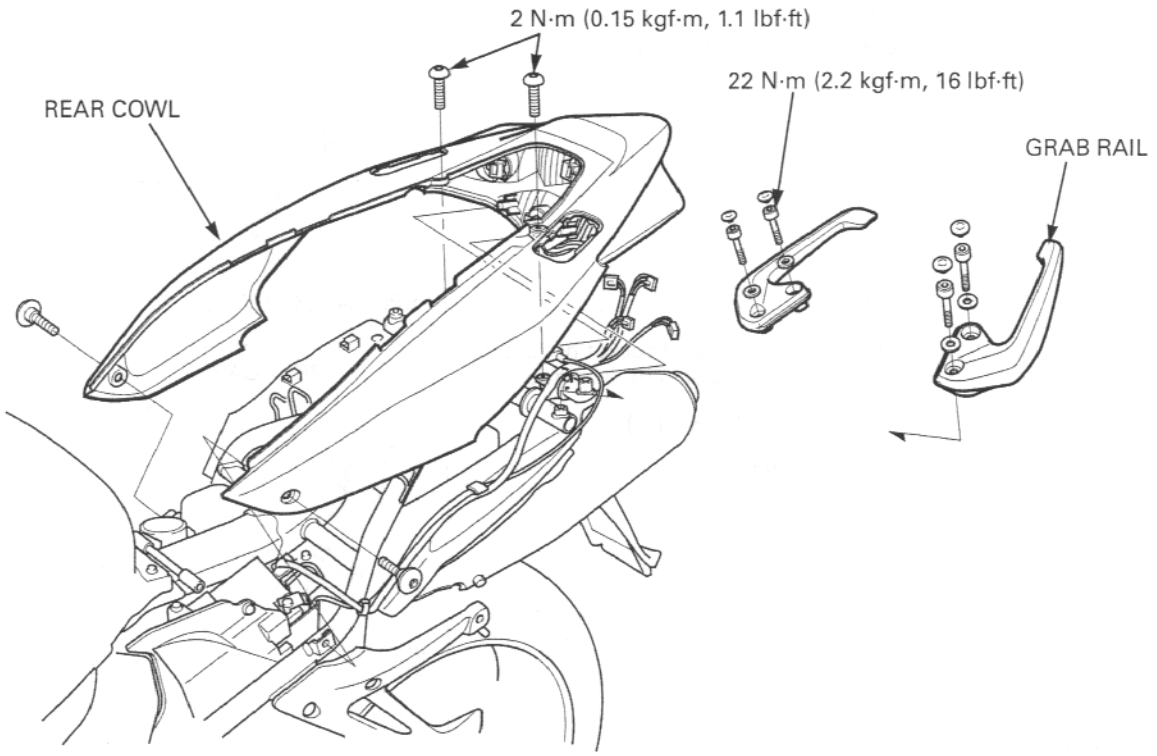

Make sure that the mating surfaces of the cowl bottom are seated onto the rear fender properly before tightening the fasteners.

Install the rear cowl while aligning its bosses with the grommets on the rear fender.

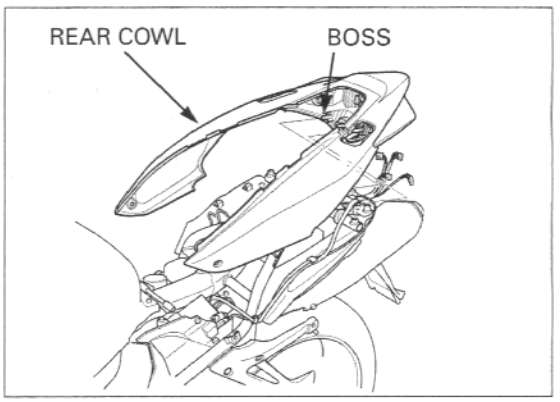

Connect the turn signal connectors and brake/tail light connectors.

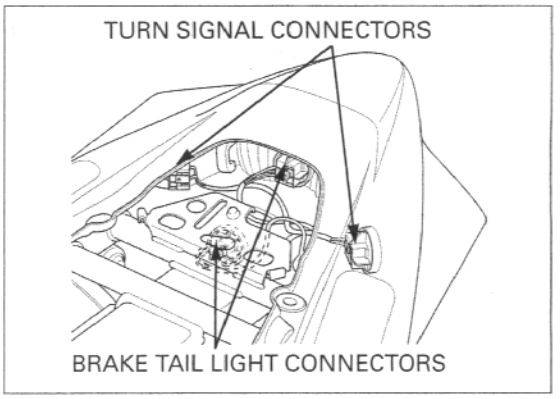

Install and tighten the rear cowl special screws.

Install and tighten the rear cowl pan screws to the specified torque.

TORQUE: 2 N·m (0.15 kgf·m, 1.1 lbf·ft)

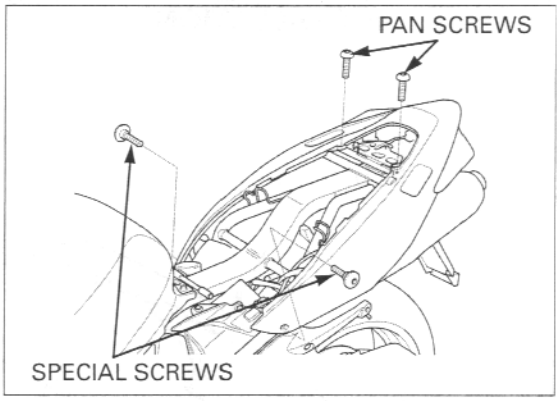

Install the grab rails, washers and socket bolts, then tighten the socket bolts to the specified torque.

TORQUE: 22 N·m (2.2 kgf·m, 16 lbf·ft)

Install the socket bolt caps.

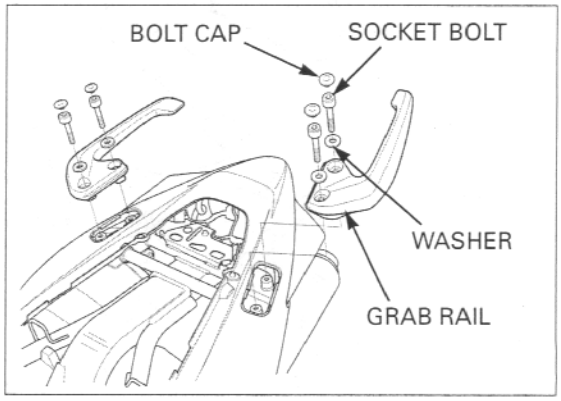

SIDE COWL

REMOVAL

The right and left side cowls are removed individually.

Remove the pan screws and trim clip from the left meter panel.

Carefully pull back the left meter panel and release the pin from the upper cowl grommet.

Release the tabs from the center meter panel, then remove the left meter panel.

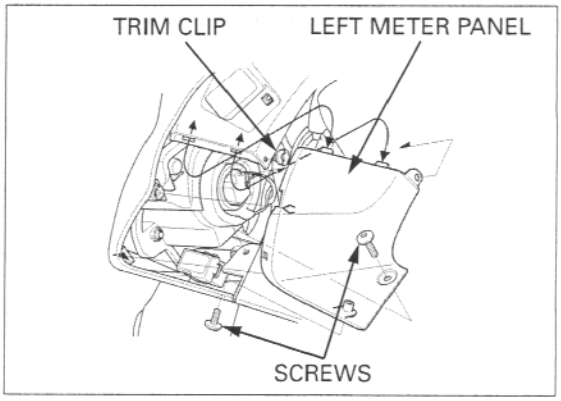

Remove the trim clips and pan screws between the right and left side cowls and inner half cowl.

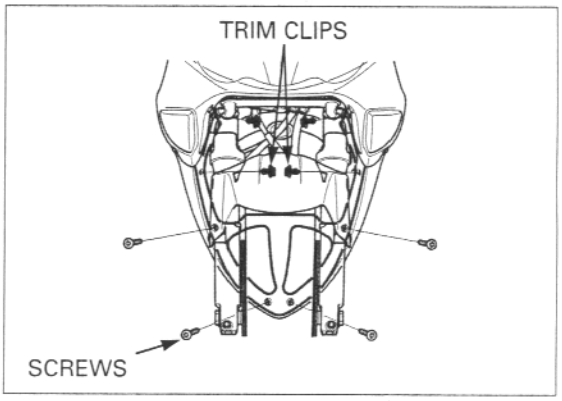

Remove the trim clips between the right and left side cowl.

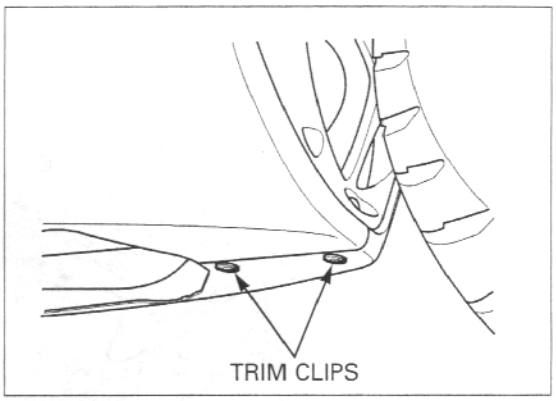

Remove the pan screws and special screws, then remove the side cowl.

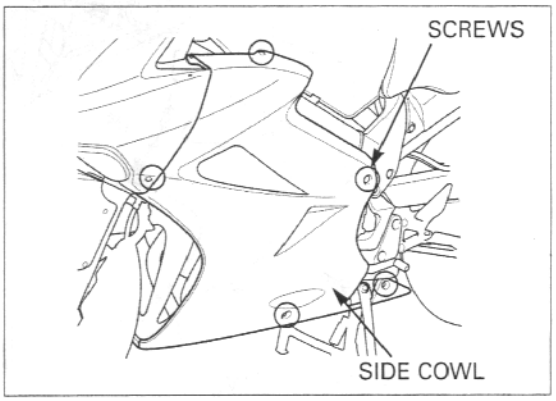

Remove the two trim clips and inner half cowl.

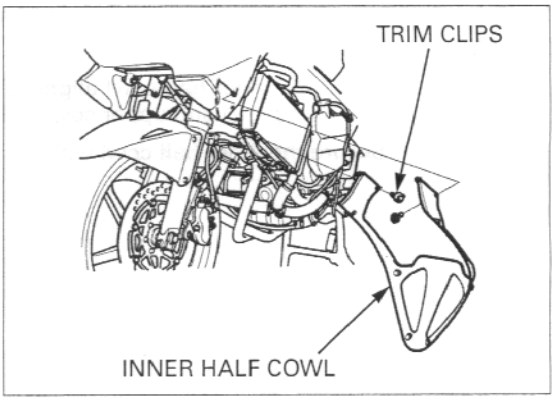

INSTALLATION

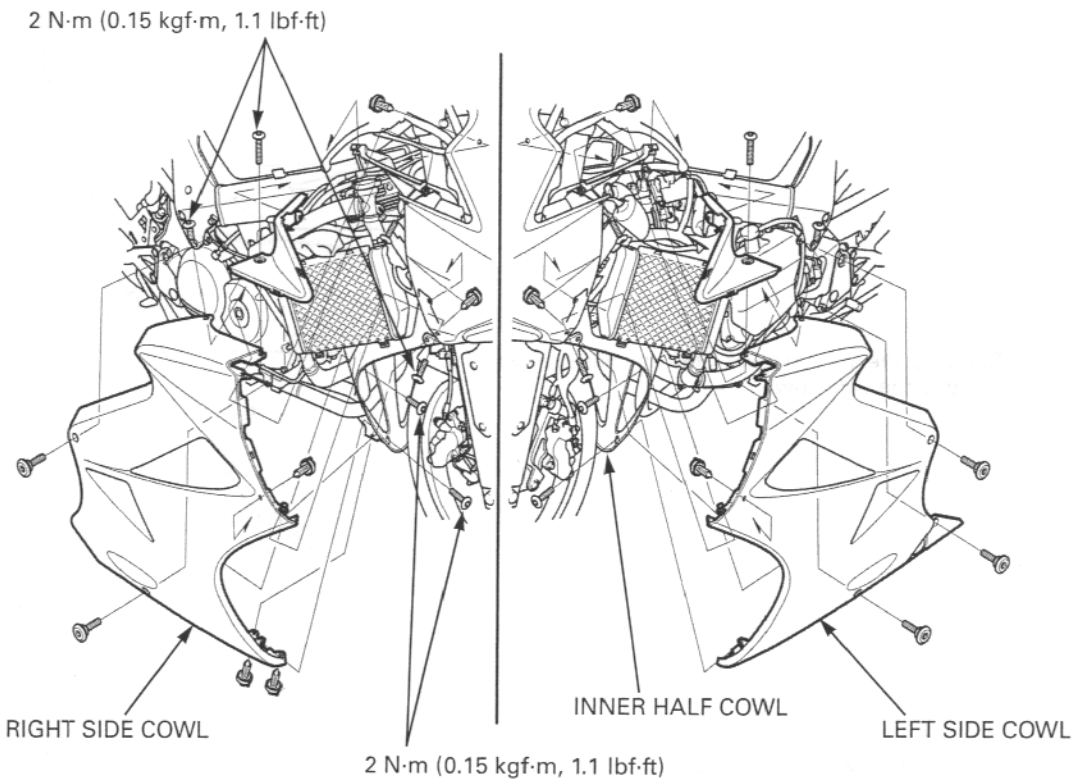

Install the inner half cowl aligning its top ends with the inner panel and upper cowl as shown.

Secure the inner half cowl with the two trim clips.

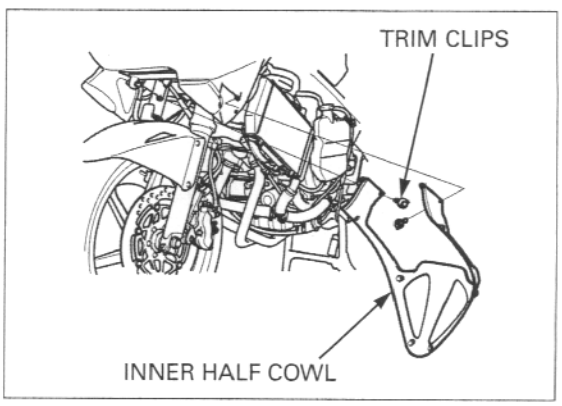

Install the right and left side cowl.

Install the special screws and pan screws.

TORQUE:
Pan screw: 2 N·m (0.15 kgf·m, 1.1 lbf·ft)

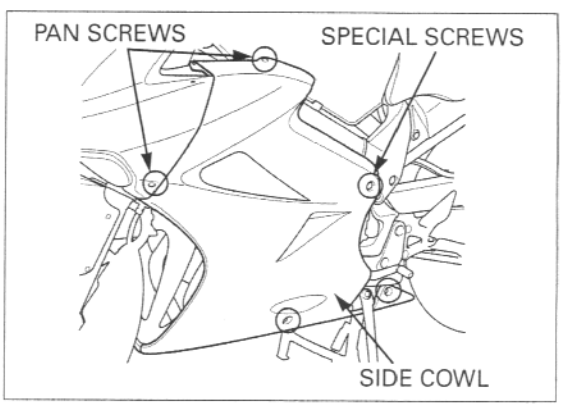

Secure the bottom of right and left side cowl with two trim clips.

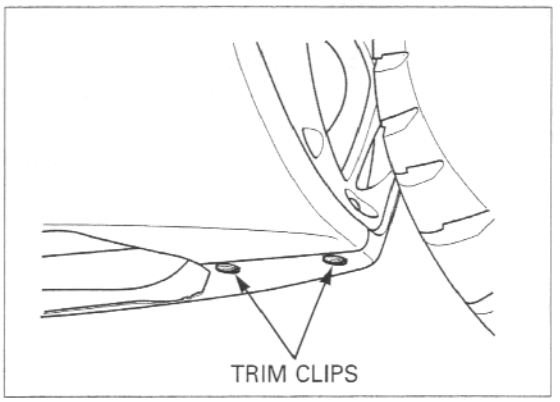

Secure the both side cowls and inner half cowl with trim clips and pan screws, then tighten the pan screws to the specified torque.

TORQUE: 2 N·m (0.15 kgf·m, 1.1 lbf·ft)

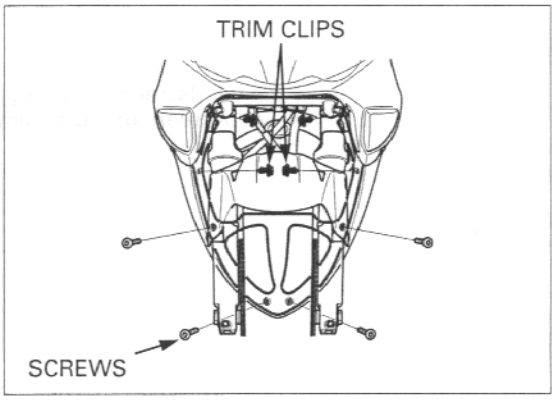

Install the left meter panel aligning its tabs with the slots in the center meter panel.
While aligning the pin behind the left meter panel with the grommet on the upper cowl, install the left meter panel.

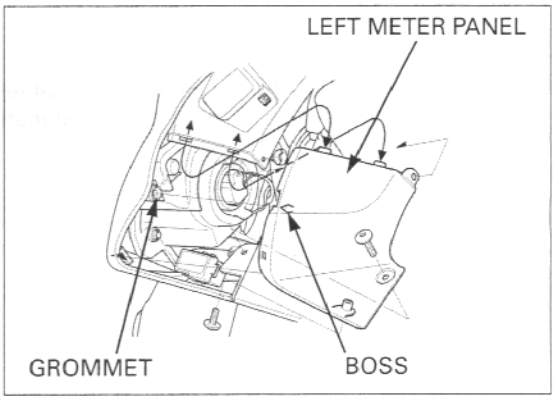

Install the pan screws and trim clips.

Tighten the side cowl screws and both meter panel screws.

Tighten the pan screws to the specified torque.

TORQUE: 2 N·m (0.15 kgf·m, 1.1 lbf·ft)

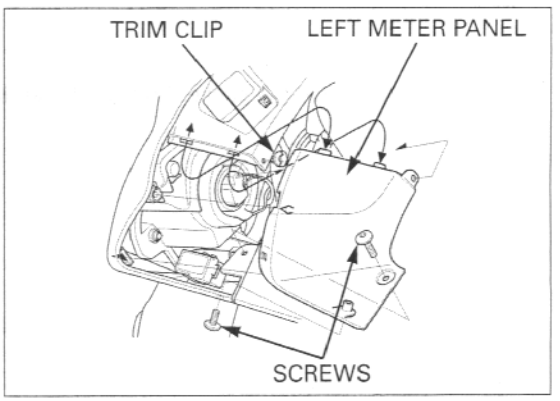

UPPER COWL

REMOVAL

Remove the lower cowl and inner half cowl (page 2-8).

Remove the screw and both upper cowl covers.

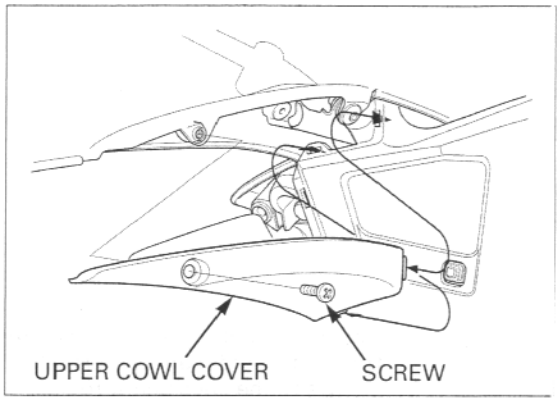

Remove the windscreen mounting screws.
Pull the windscreen up and remove it from the upper cowl.

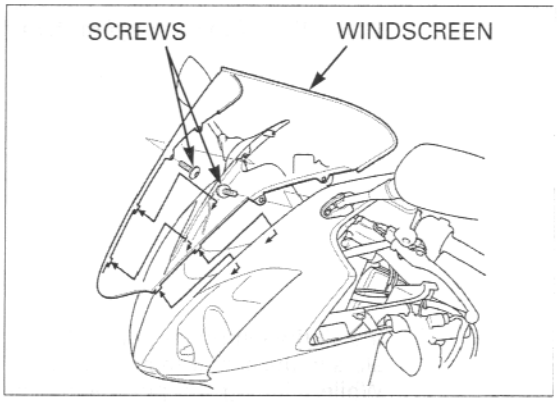

Remove the center meter panel while releasing the panel bosses from the combination meter grommets.

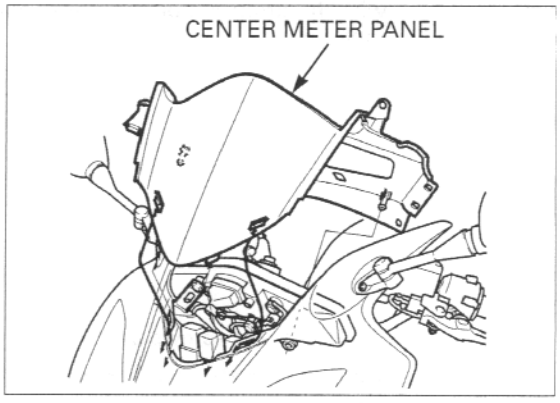

Remove the socket bolts and rearview mirror.

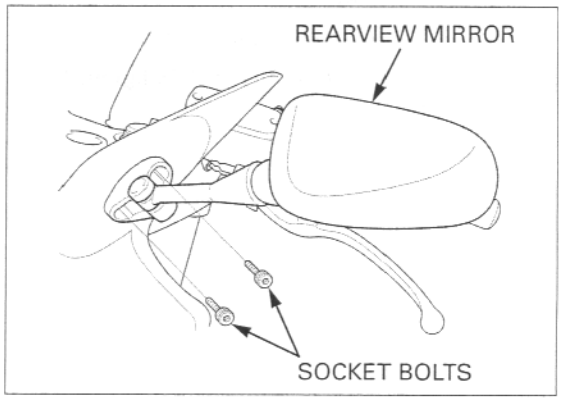

Remove the upper cowl mounting nuts and collars.

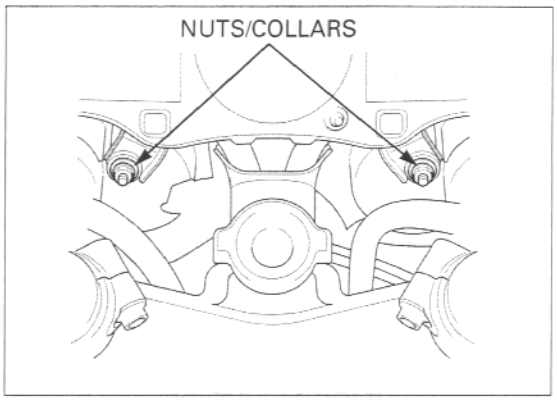

Be careful not to scratch the upper cowl and front fender.

Release the upper cowl off the rearview mirror bolt hole studs and pull the upper cowl forward.

Disconnect the open air temperature sensor connector, headlight sockets and turn signal connectors.

Remove the upper cowl assembly.

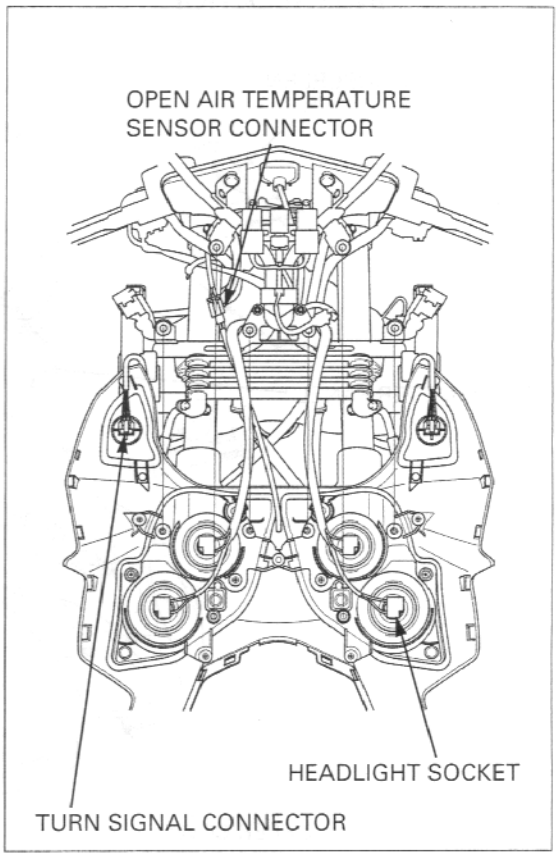

Remove the screws and headlight units.

Remove the screw and open air temperature sensor from the upper cowl.

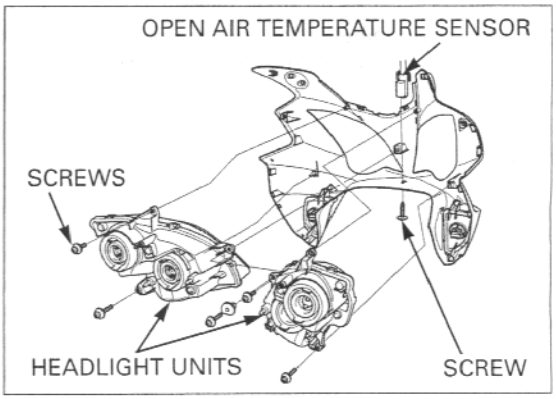

Remove the screws and turn signal units from the upper cowl.

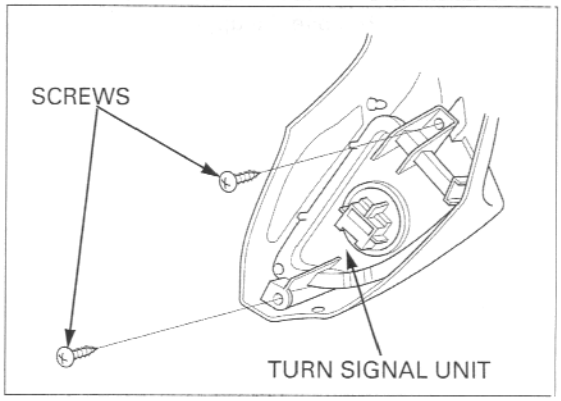

INSTALLATION

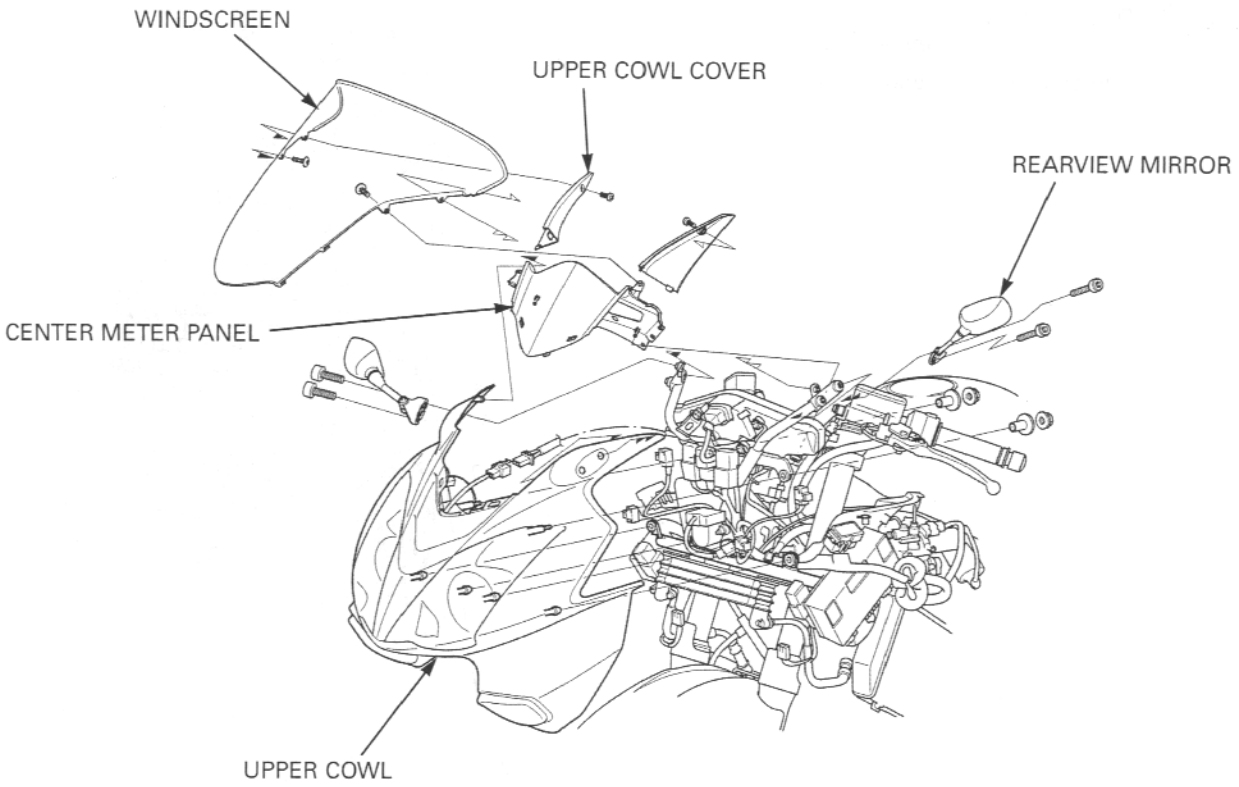

Install the turn signal units into the upper cowl, tighten the screws securely.

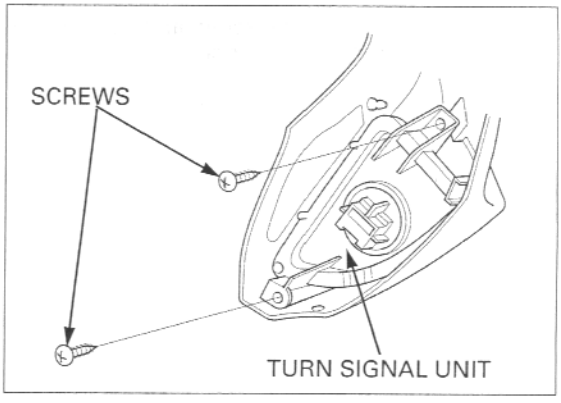

Install the open air temperature sensor into the upper cowl and tighten the screw securely.

Install the headlight units and tighten the screw securely.

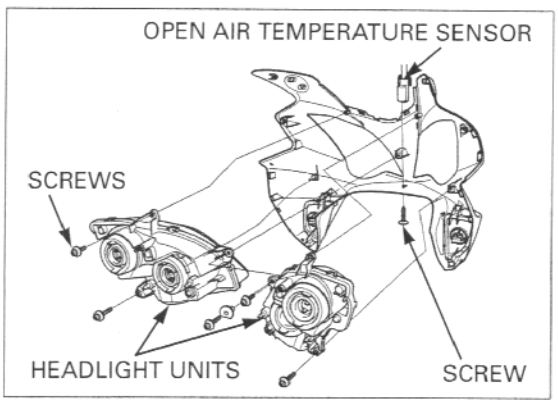

Place the upper cowl onto the front fender.

Connect the turn signal connectors, headlight socket and open air temperature sensor connector.

Install the upper cowl onto the upper cowl stay while aligning the headlight unit bosses with the upper cowl stay grommets.

Set the upper cowl onto the rearview mirror bolt hole studs.

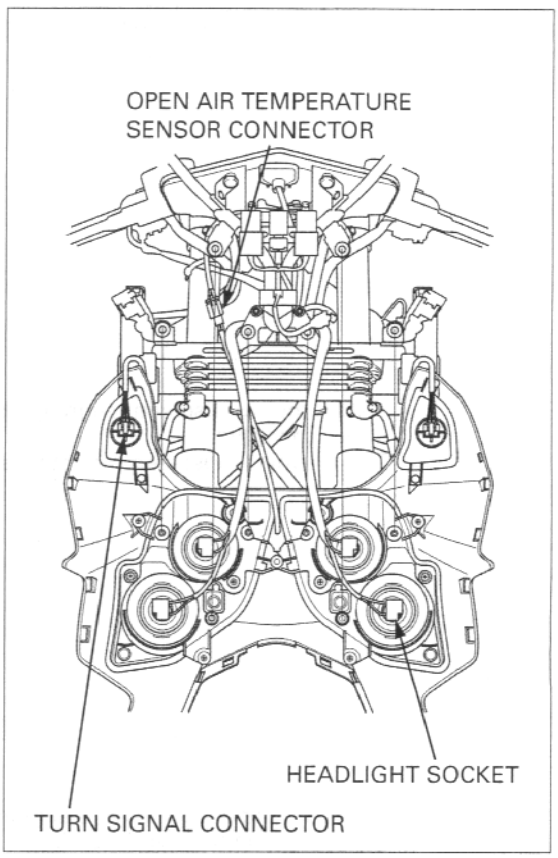

Install the upper cowl mounting collars and nuts, tighten the nuts securely.

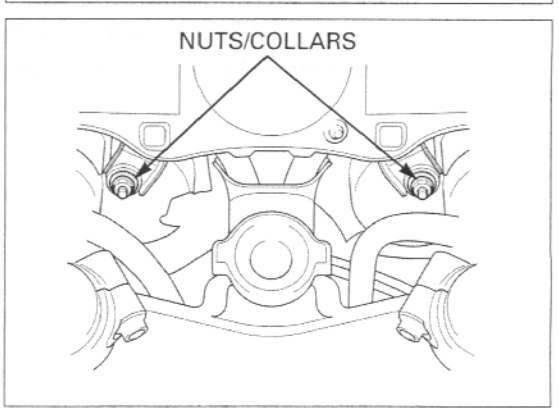

Install the rearview mirror and tighten the socket bolts securely.

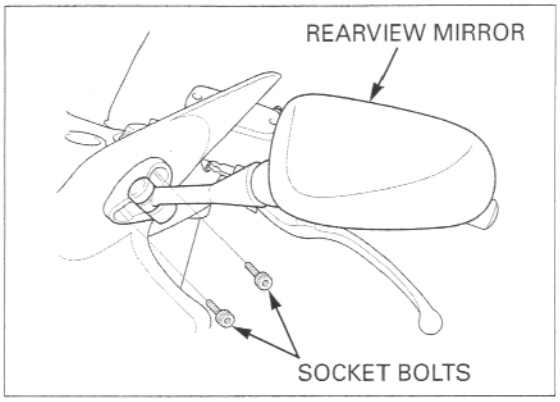

Install the center meter panel onto the combination meter and upper cowl while aligning the panel bosses with the combination meter grommets.

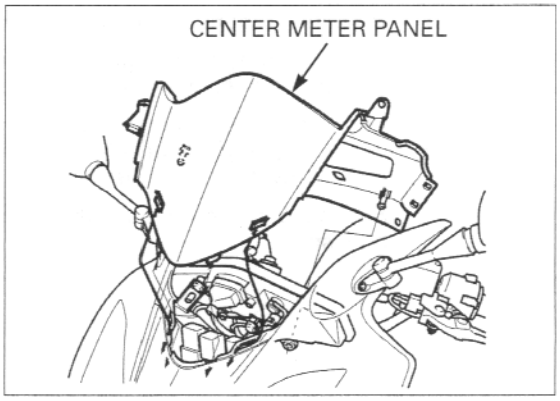

Install the windscreen aligning its tabs with the upper cowl slits.
Tighten the windscreen mounting screws.

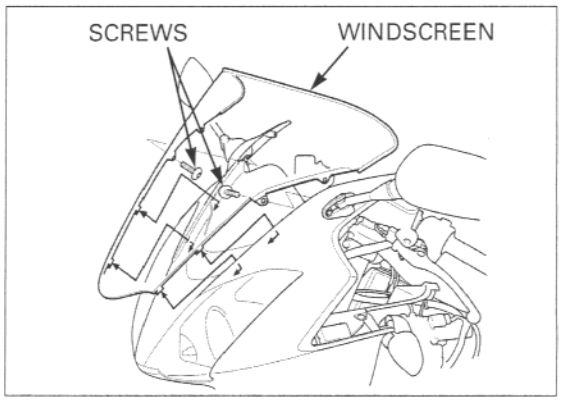

Install the upper cowl covers aligning their tabs with the grooves in the upper cowl.

Install and tighten the screw securely.

Install the inner half cowl and side cowl (page 2-10).

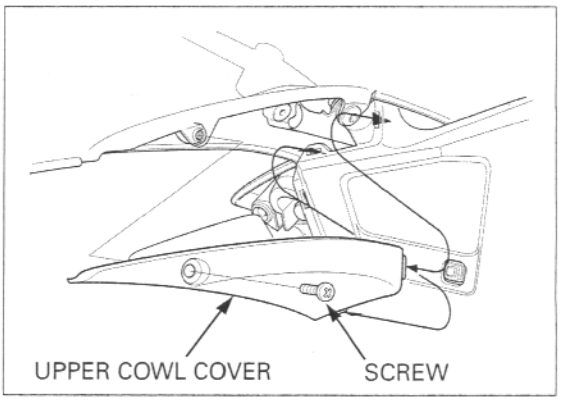

FRONT FENDER

REMOVAL

Remove the front fender special bolts, flange bolts and reflectors.

Remove the front fender forward.

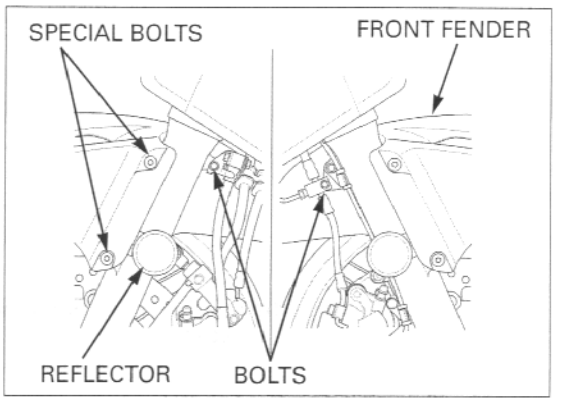

INSTALLATION

Installation the front fender in the reverse order of removal.

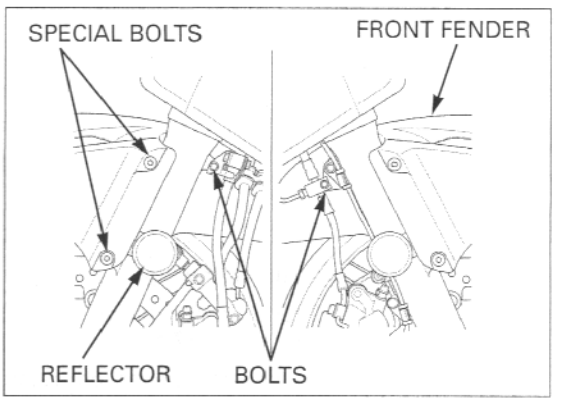

REAR FENDER

REMOVAL

Remove the rear cowl (page 2-5).

Disconnect the license light connector.

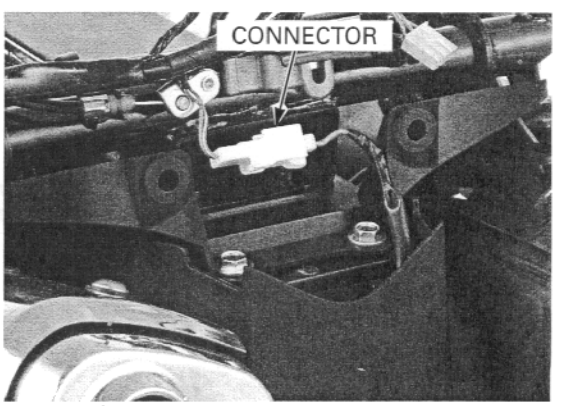

Remove the rear fender A mounting 6 mm bolts.

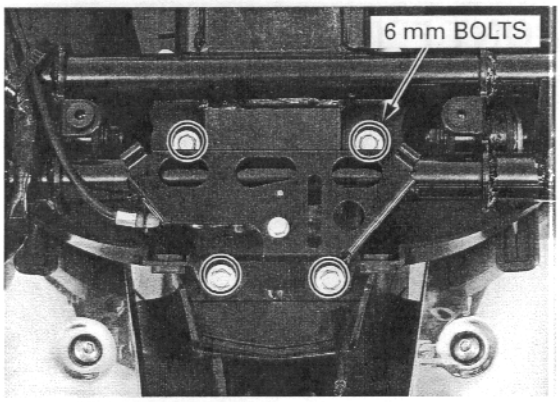

Remove the rear fender A mounting 8 mm bolts and rear fender A assembly.

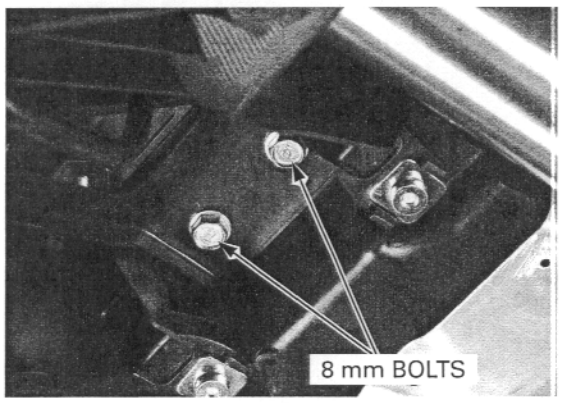

Remove the following:

- Muffler assembly (page 2-28)
- Battery (page 17-6)

Remove the seat release lock retainer from the lock.

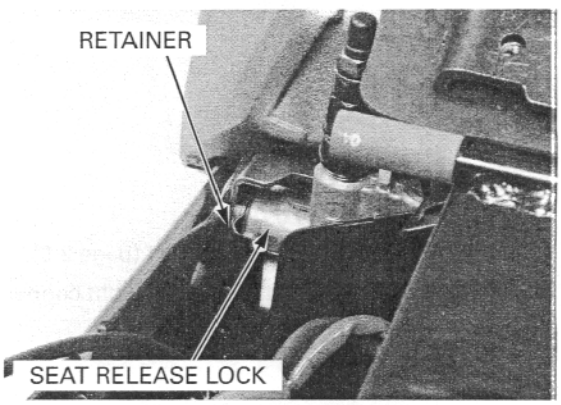

Disconnect the seat release cable from the lock and lock bracket, then remove the lock and lock bracket.

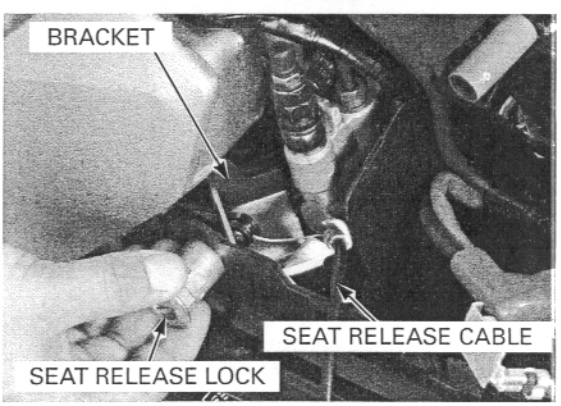

Remove the starter relay switch from the rear fender B boss.
Release the rear sub-harness and seat release cable from the wire clip and remove it from the rear fender B wire guide.

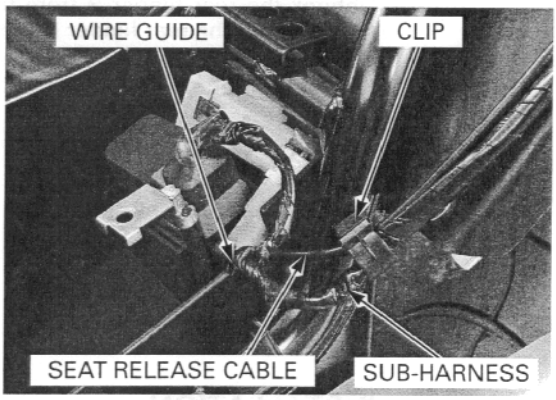

Remove the wire band, and then remove the seat release cable and rear sub-harness from the seat rail.

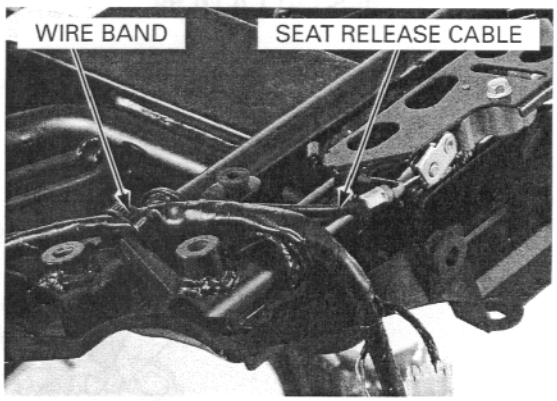

Remove the rear fender B rear mounting screws.

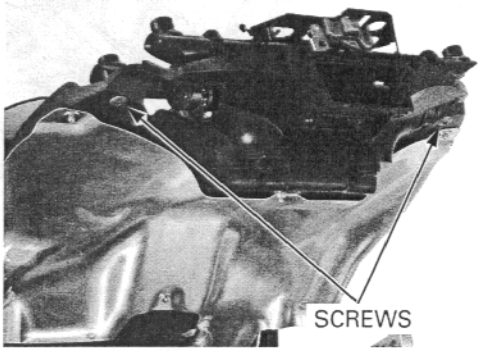

Remove the rear fender B front mounting bolts.

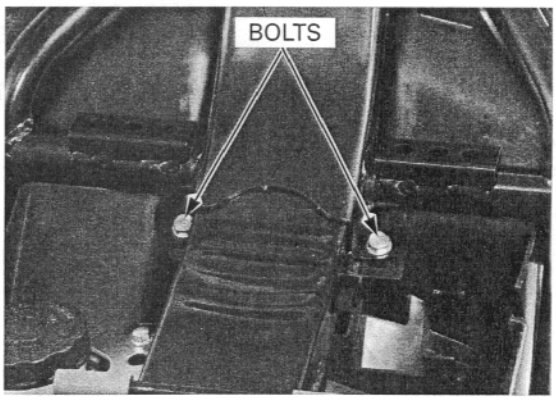

Unhook the rear fender B from the seat rail brace, then remove the rear fender B backward.

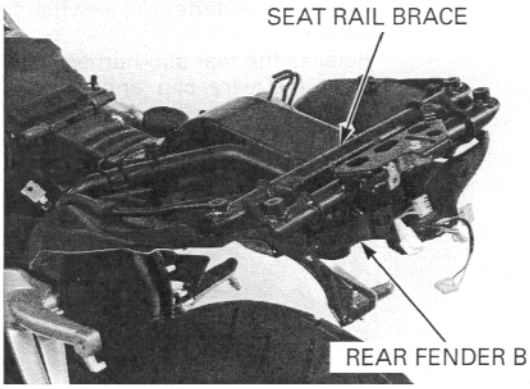

INSTALLATION

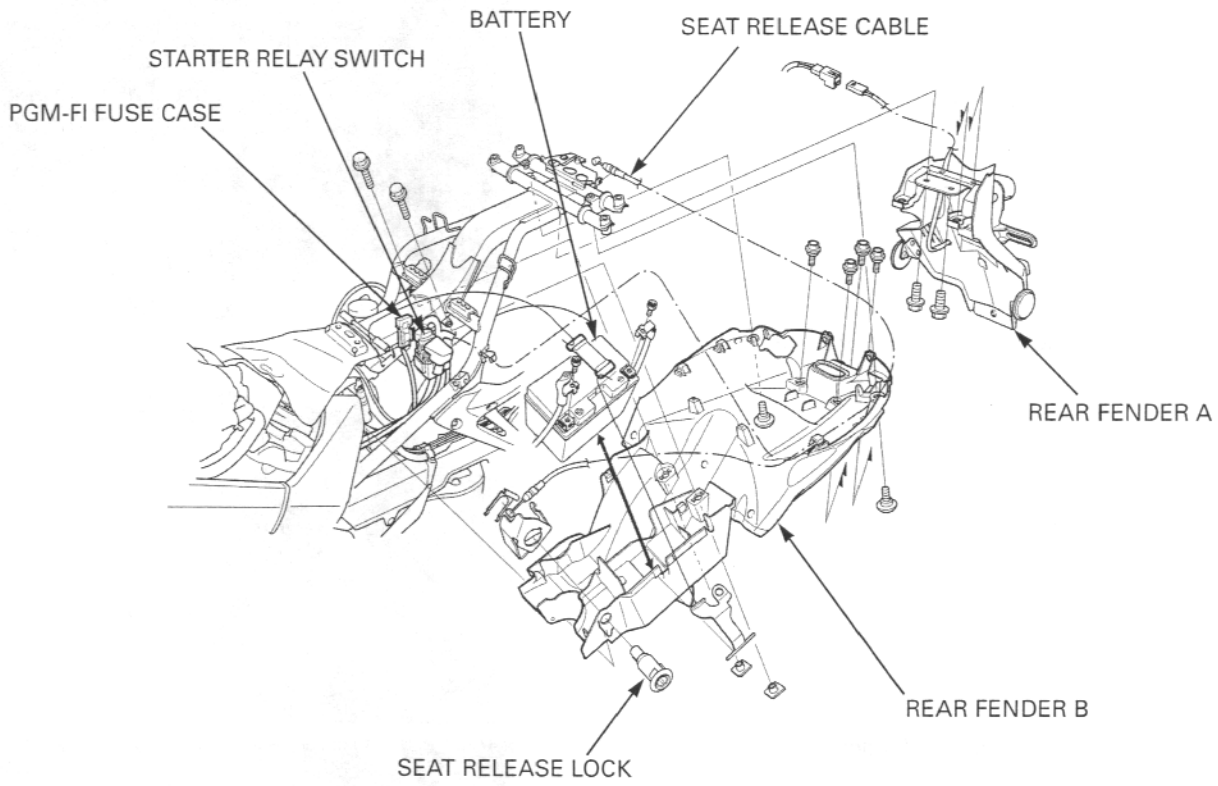

While installing the rear fender, route the wire harness properly (page 1-25).

Install the rear fender B aligning its front grooves with the seat rail pins.

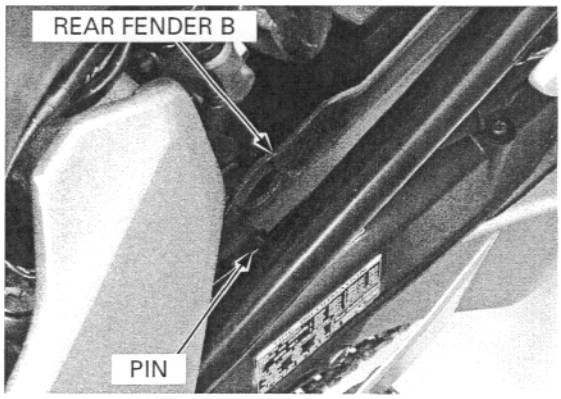

Hook the rear fender B to the seat rail brace.

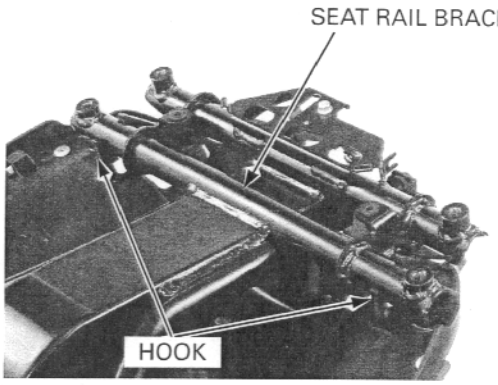

Install and tighten the rear mounting screws.

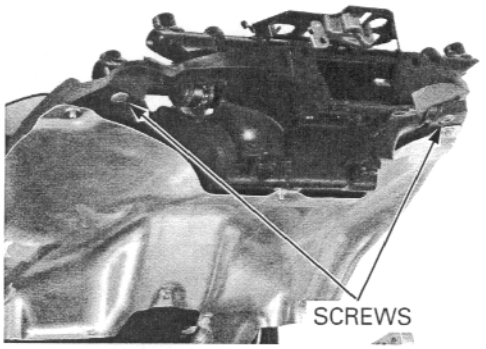

Install and tighten the front mounting bolts.

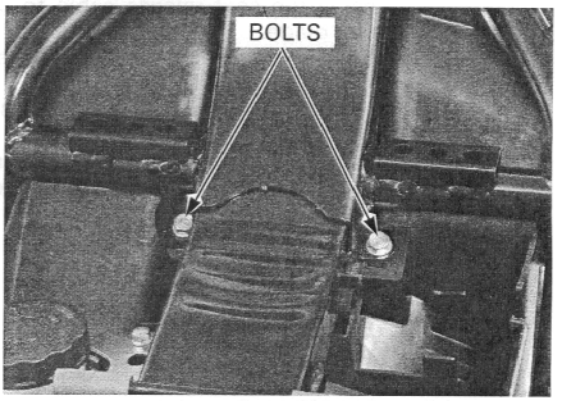

Install the seat release lock bracket into the rear fender B.

Temporarily install the seat release lock through the rear fender B and bracket holes.

Install the seat release cable end to the seat release lock, then hook the cable to the bracket.

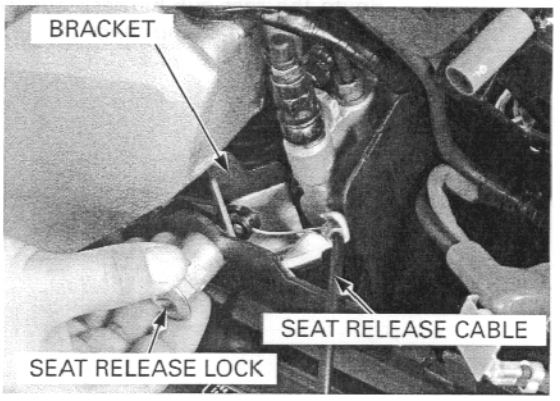

Fully install the seat release lock by aligning the rear fender B and bracket slits.

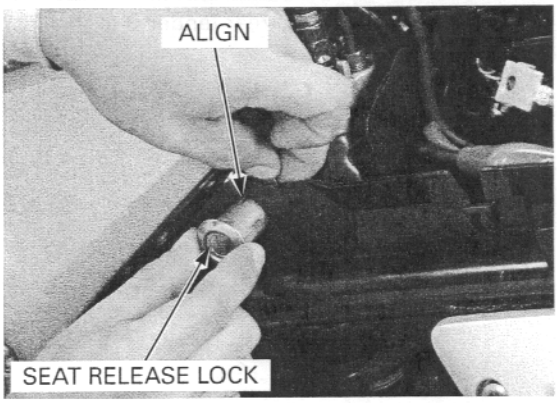

Secure the seat release lock with the retainer.

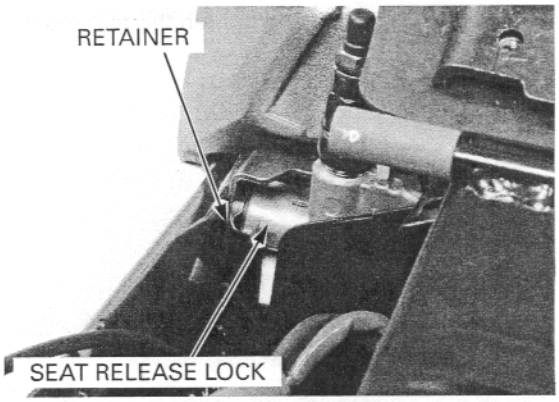

Install the seat release cable to the rear fender B wire guide.
Route the rear sub-harness properly and install it into the rear fender B wire guide.
Secure the rear sub-harness and seat release cable with the wire clip.
Install the PGM-FI fuse case to the rear fender B.
Install the starter relay to the rear fender B bosses.

Install the battery (page 17-6).

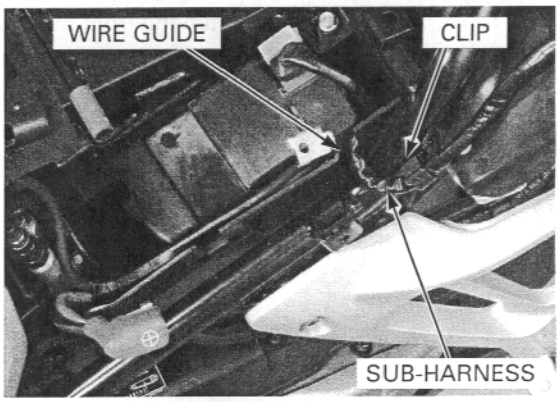

Route the rear sub-harness and seat release cable properly, then clamp them to the seat rail with the wire band.

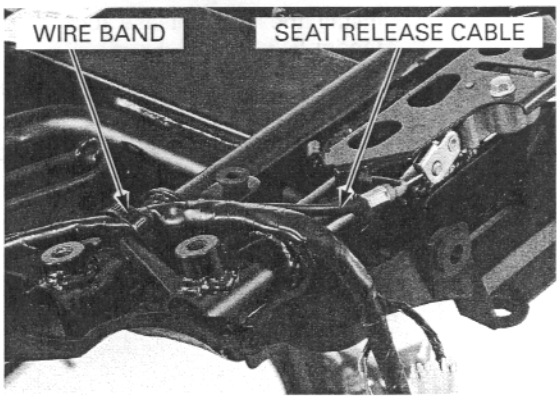

Install the muffler assembly (page 2-33).

Install the rear fender A assembly onto the rear fender B, then install the 6 mm bolts.

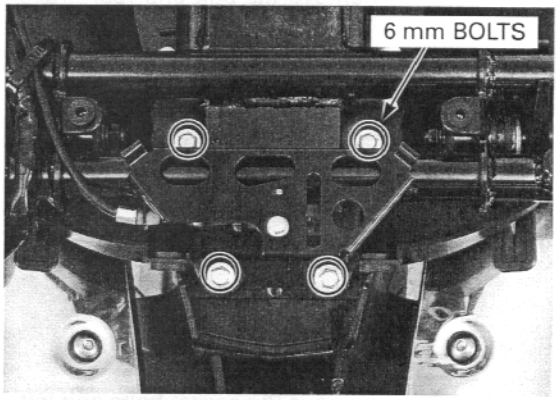

Install and tighten the 8 mm bolts, then tighten the 6 mm bolts.

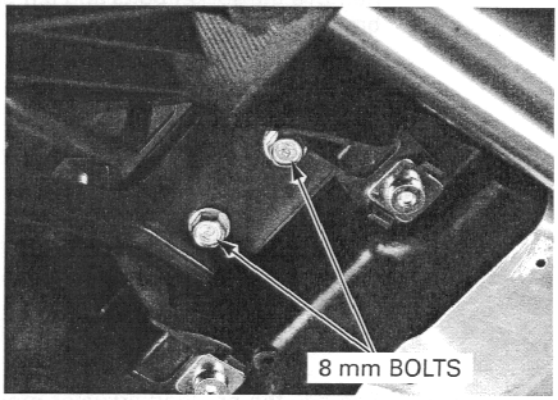

Connect the license light connector.

Install the rear cowl (page 2-7).

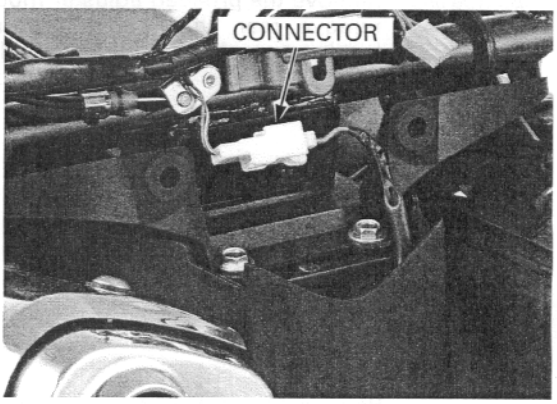

SEAT RAIL

REMOVAL

Remove the rear fender (page 2-17).
Remove the fuel tank (page 5-56).

Remove the pivot bolt/nut, then remove the seat rear brackets and rubber seat.

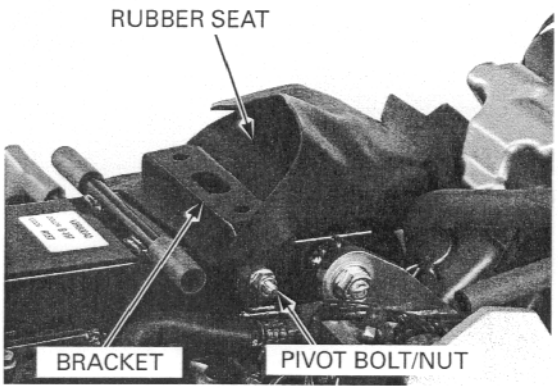

Remove the bolt and rear brake reservoir bracket from the seat rail.

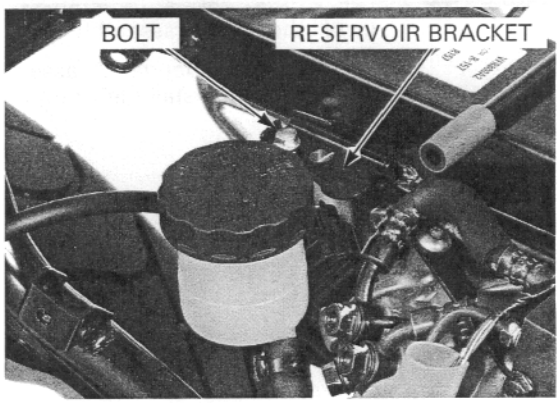

Remove the socket bolts and left passenger footpeg bracket.

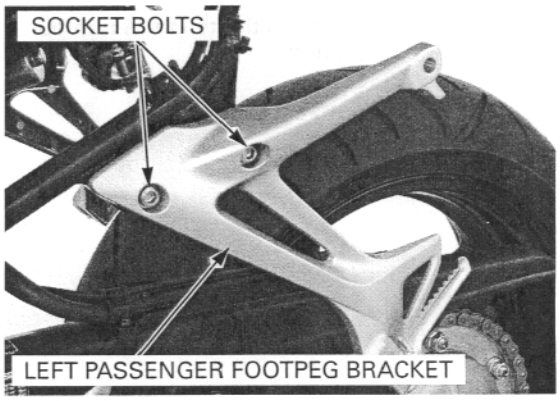

ABS type only: Remove the pre-load adjuster mounting bolts, then remove rear shock absorber pre-load adjuster/ bracket assembly from the right pillion footpeg.

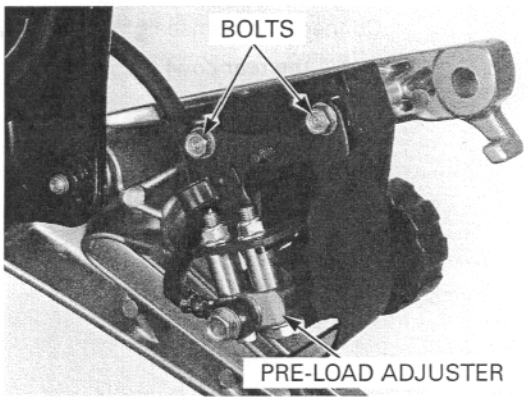

Remove the socket bolts and right passenger footpeg bracket.

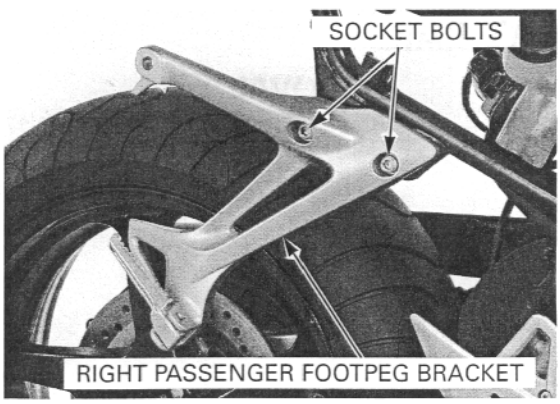

Remove the muffler heat guard mounting bolt.

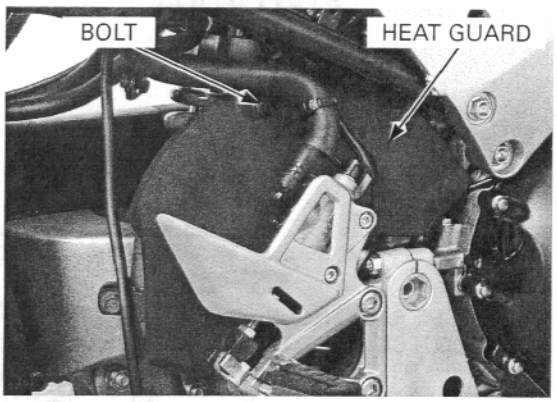

ABS type only: Remove the ABS modulator bracket mounting socket bolts.

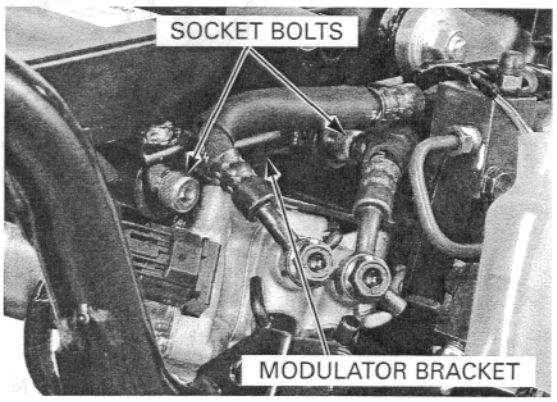

Remove the seat rail lower mounting bolts/flange nuts.

Remove the seat rail upper mounting bolt/nut and then remove the seat rail from the frame.

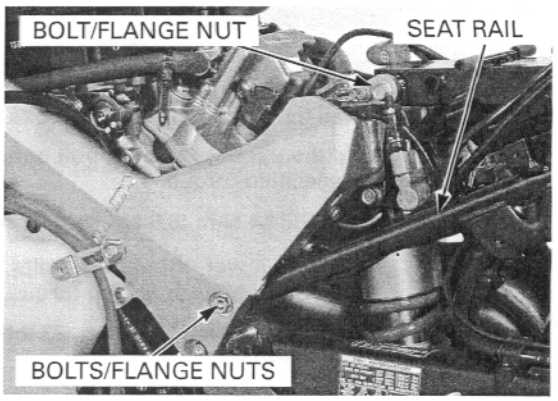

INSTALLATION

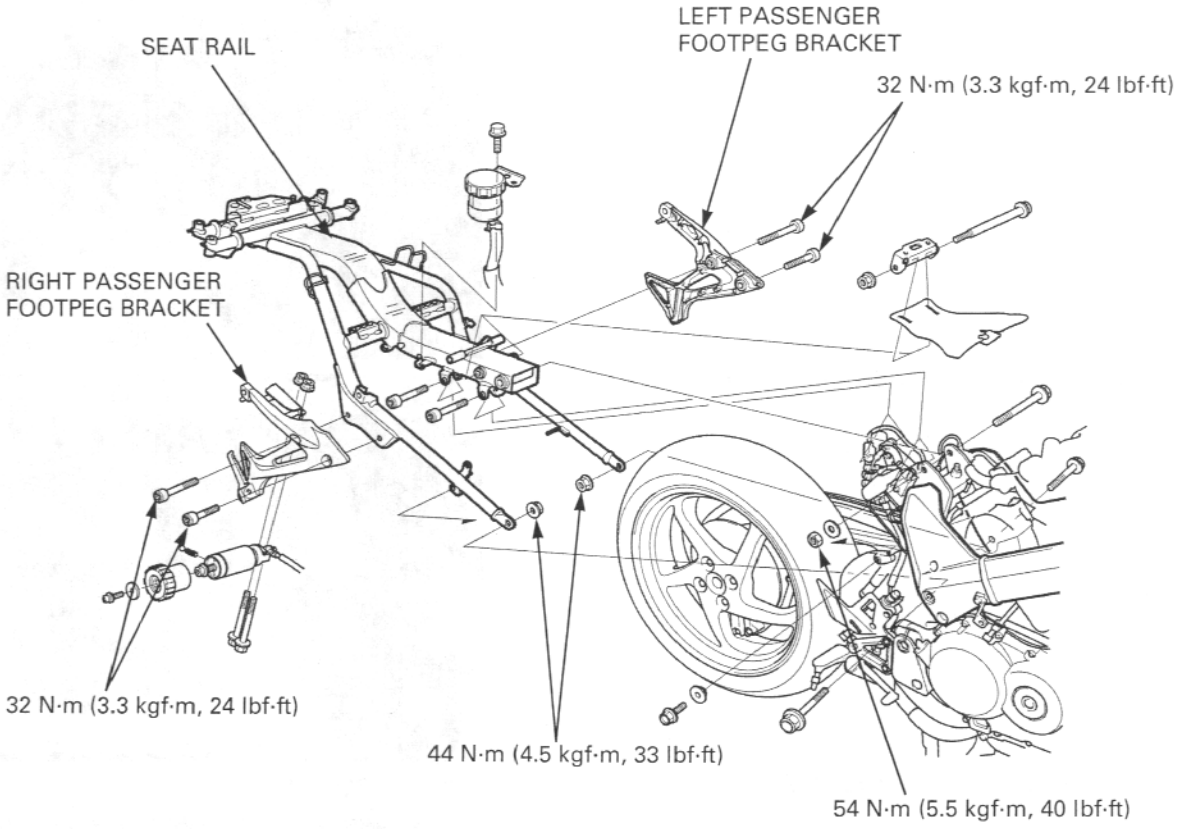

Install the seat rail to the frame.
Install the seat rail mounting bolts and nuts.

Hold the upper mounting bolt and tighten the nut to the specified torque.

TORQUE: 54 N·m (5.5 kgf·m, 40 lbf·ft)

Hold the lower mounting bolts and tighten the flange nuts to the specified torque.

TORQUE: 44 N·m (4.5 kgf·m, 33 lbf·ft)

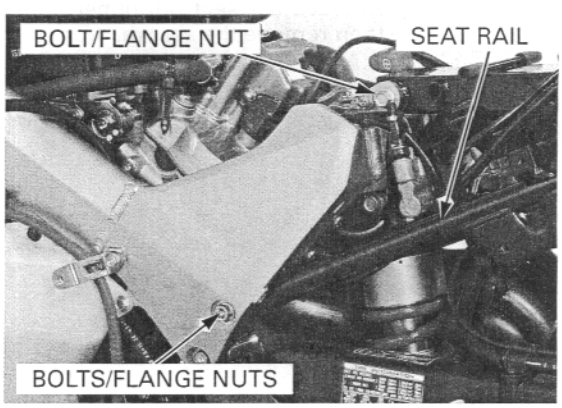

ABS type only: Install and tighten the ABS modulator bracket socket bolts.

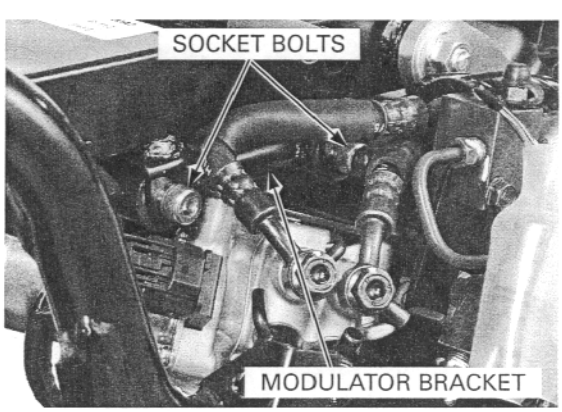

Install and tighten the heat guard plate mounting bolt.

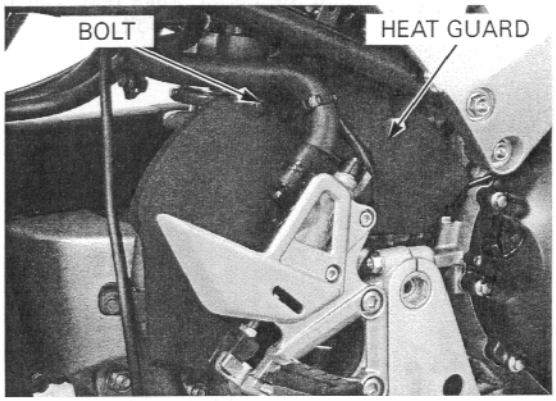

Install the right passenger footpeg bracket and tighten the bolts to the specified torque.

TORQUE: 32 N·m (3.3 kgf·m, 24 lbf·ft)

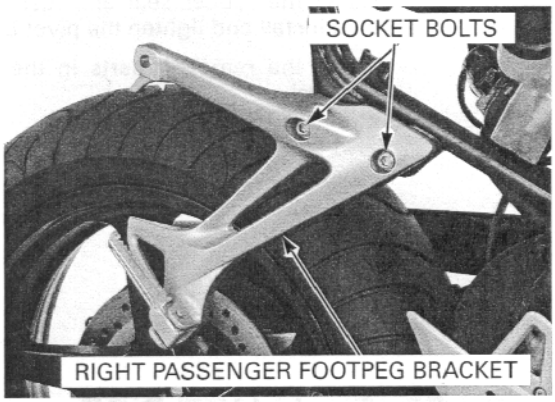

ABS type only: Route the shock absorber pre-load adjuster hose properly.
Install the pre-load adjuster/bracket assembly onto the right pillion footpeg bracket.
Install and tighten the bolts securely.

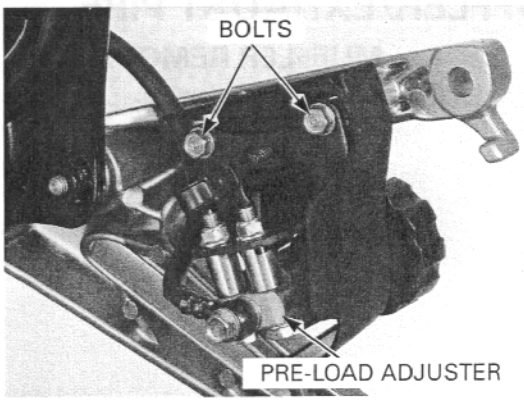

Install the left passenger footpeg bracket and tighten the bolts to the specified torque.

TORQUE: 32 N·m (3.3 kgf·m, 24 lbf·ft)

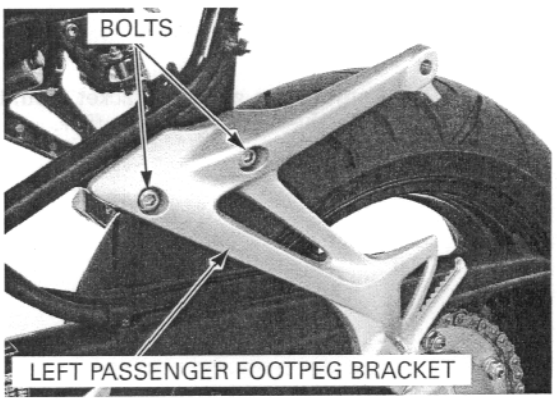

Install the pedal brake reservoir bracket to the seat rail and tighten the bolt.

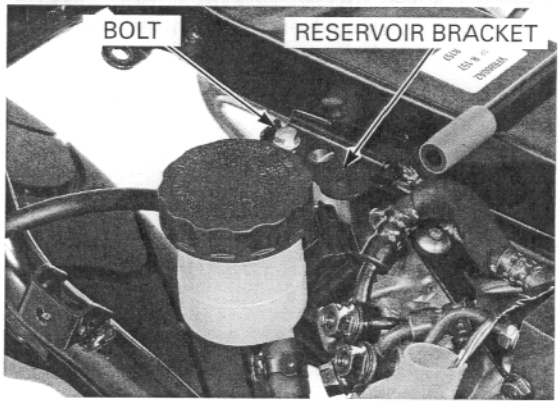

Install the rubber seat and fuel tank rear bracket, then install and tighten the pivot bolt/nut.

Install the removed parts in the reverse order of removal.

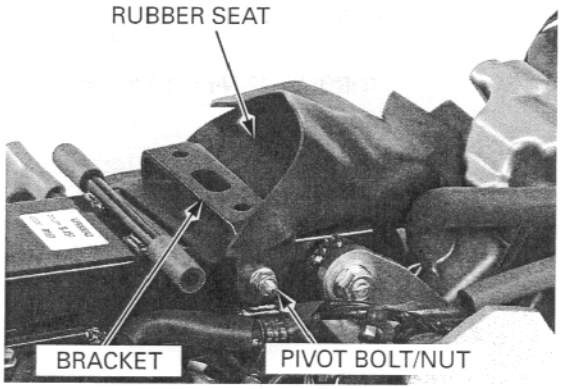

MUFFLER/EXHAUST PIPE

MUFFLER REMOVAL

Remove the following:

- Rear cowl (page 2-5)
- Rear fender A (page 2-17)
- Side cowl (page 2-8)

Loosen the exhaust pipe/muffler clamp bolts.

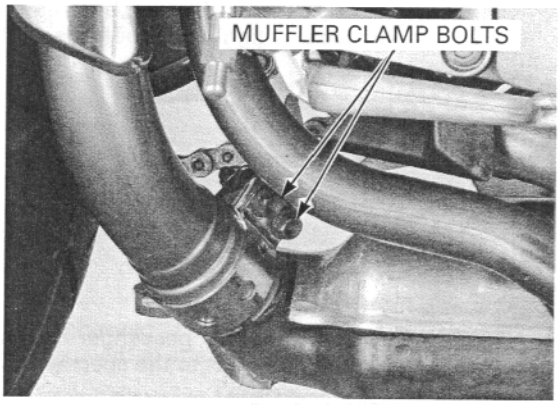

Remove the muffler bracket mounting socket bolts/nuts, then remove the muffler.

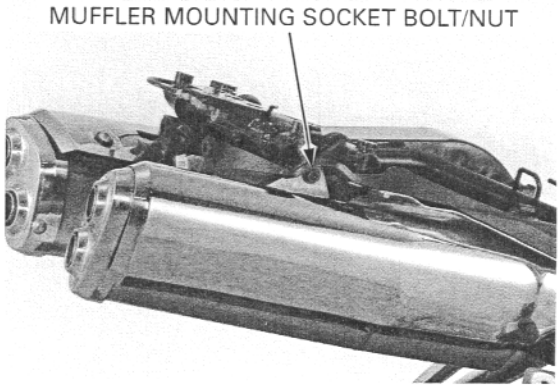

EXHAUST PIPE REMOVAL

Remove the right footpeg holder mounting bolts and muffler heat guard plate mounting bolt.

Remove the right footpeg holder and heat guard as an assembly.

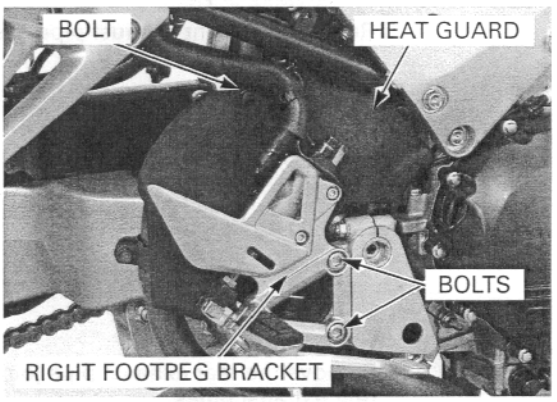

Disconnect the O_2 sensor 4P (Natural) and 4P (Black) connectors.

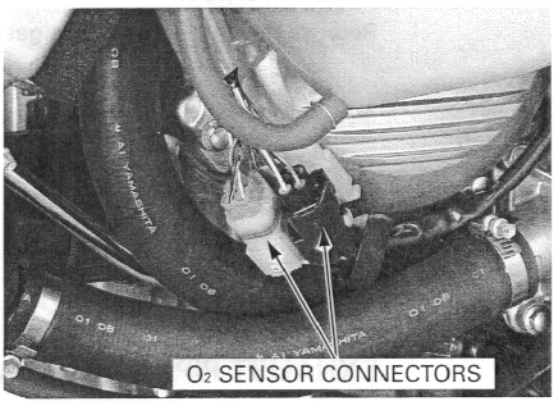

Loosen the rear exhaust pipe clamp bolts.

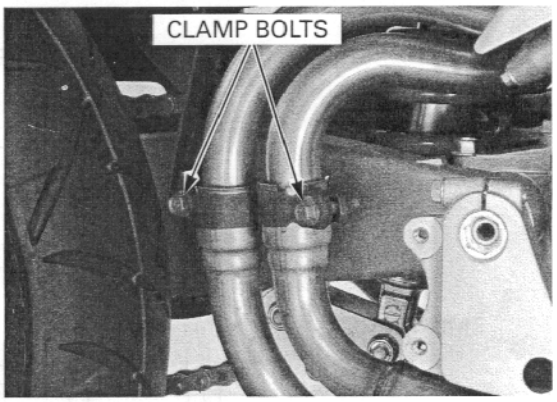

Remove the front exhaust pipe joint special nuts.

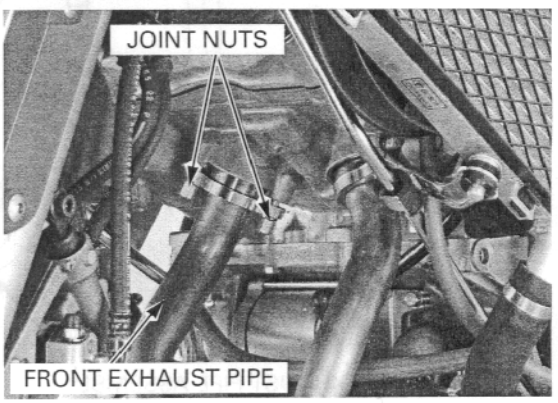

Remove the front exhaust pipe mounting bolt/nut and exhaust pipe.

Remove the front exhaust pipe gaskets.

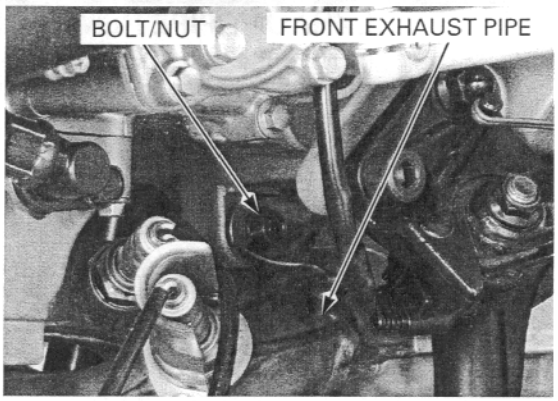

Remove the rear exhaust pipe joint special nuts and rear exhaust pipes.

Remove the rear exhaust pipe gaskets.

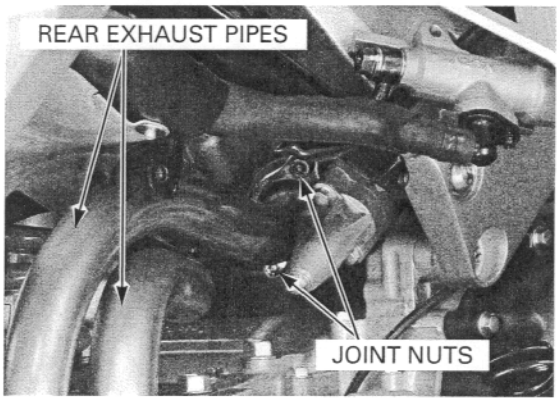

EXHAUST PIPE INSTALLATION

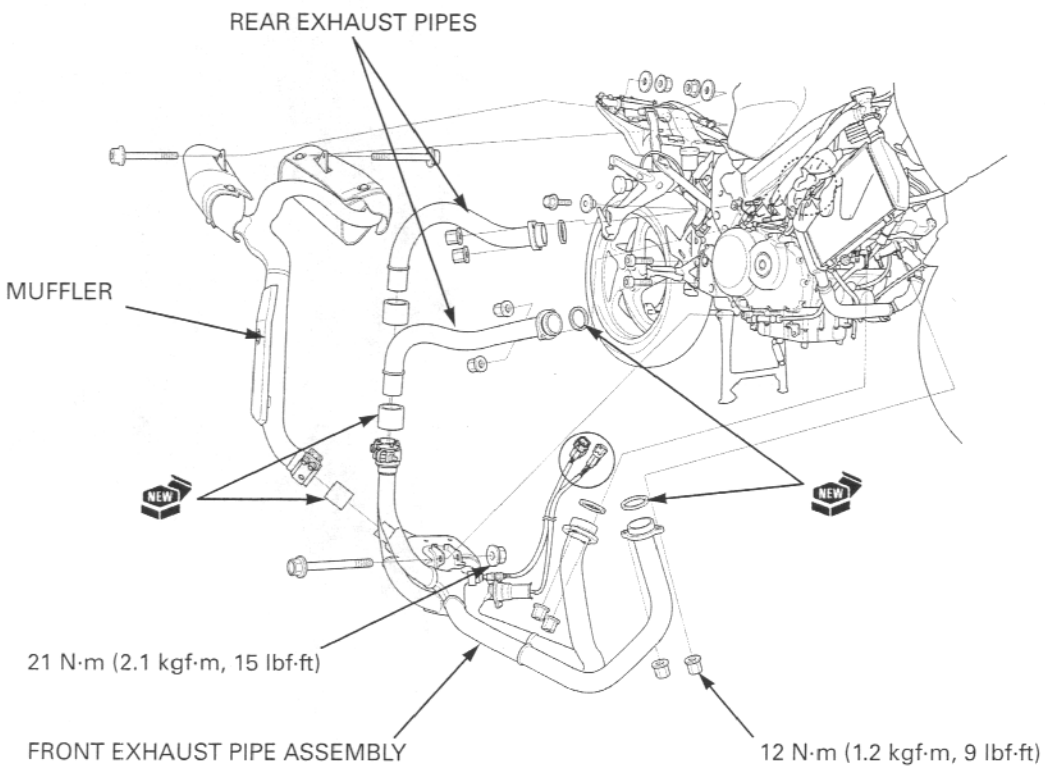

Always replace the exhaust pipe gaskets with new ones.

Install the new exhaust pipe gaskets onto the rear exhaust ports of the cylinder head.

Install the rear exhaust pipes, temporarily install the rear exhaust pipe joint special nuts but do not tighten them yet.

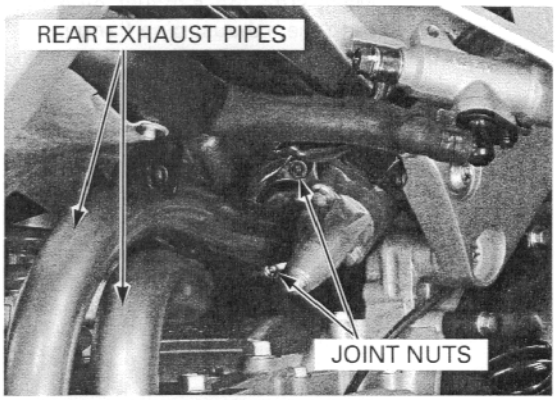

Always replace the exhaust pipe gaskets with new ones.

Install the new exhaust pipe gaskets onto the front exhaust ports of the cylinder head.

Route and install the front exhaust pipe into the center stand.
Temporarily install the front exhaust pipe joint special nuts but do not tighten them yet.

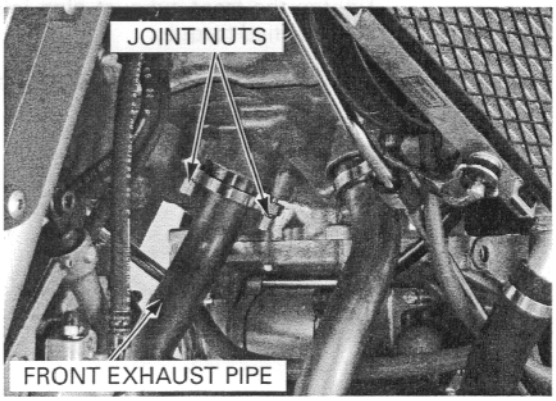

Install the mounting rubbers, insulated washers and collars into the exhaust pipe mounting bracket.

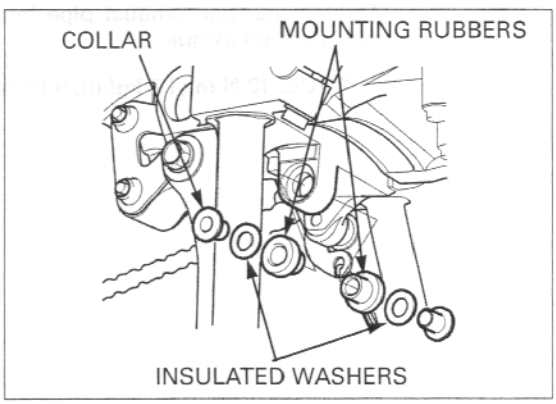

Set the front exhaust pipe onto the frame bracket and then install the mounting bolt and nut.

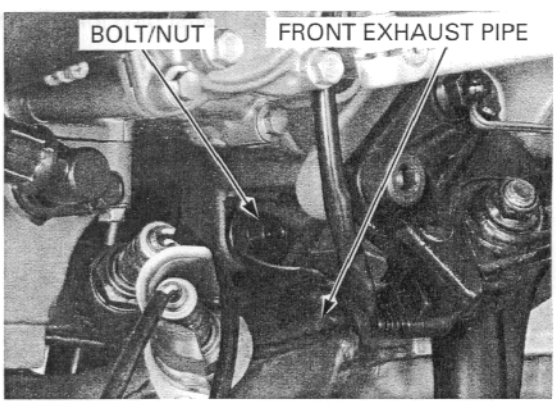

Make sure the exhaust pipe band tabs are seated onto the exhaust pipe flange.

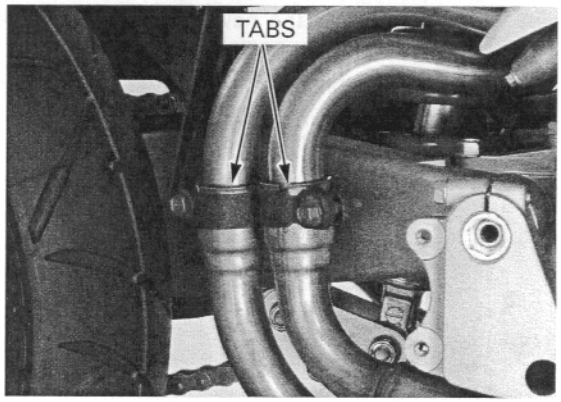

Tighten the front exhaust pipe joint special nuts to the specified torque.

TORQUE: 12 N·m (1.2 kgf·m, 9 lbf·ft)

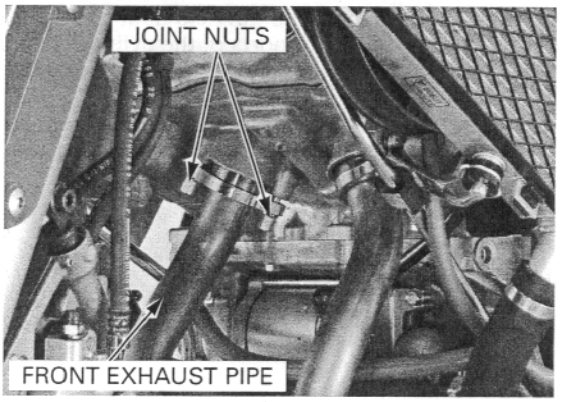

Tighten the rear exhaust pipe joint special nuts to the specified torque.

TORQUE: 12 N·m (1.2 kgf·m, 9 lbf·ft)

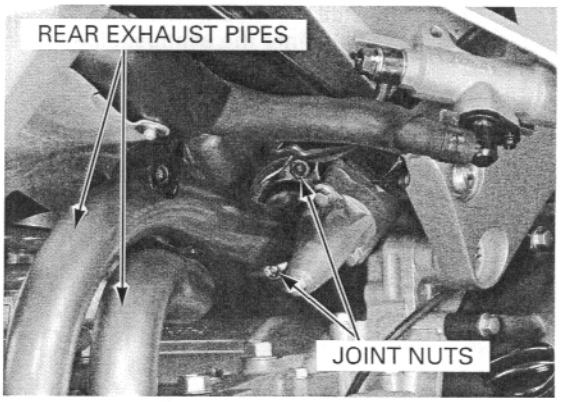

Tighten the exhaust pipe joint band bolts.

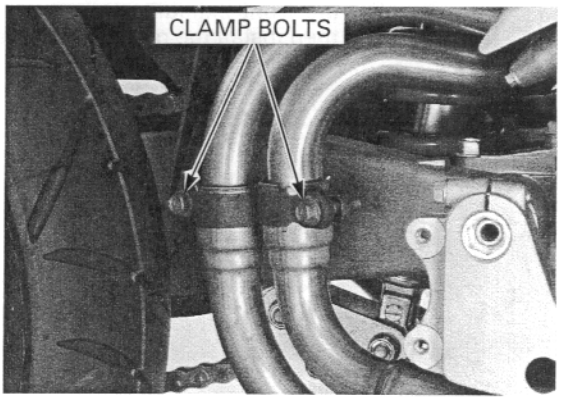

Tighten the front exhaust pipe flange nut to the specified torque.

TORQUE: 21 N·m (2.1 kgf·m, 15 lbf·ft)

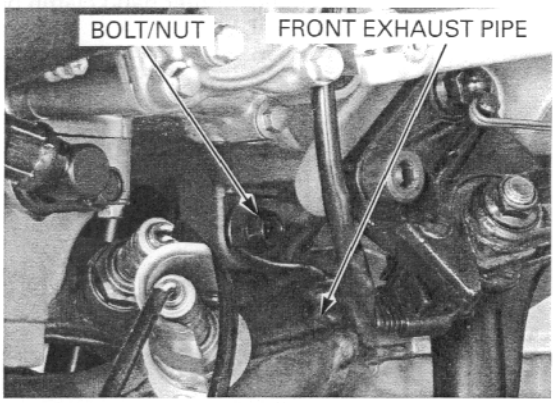

Install the muffler heat guard/right footpeg holder assembly onto the frame, install and tighten the footpeg mounting bolts and heat guard mounting bolt.

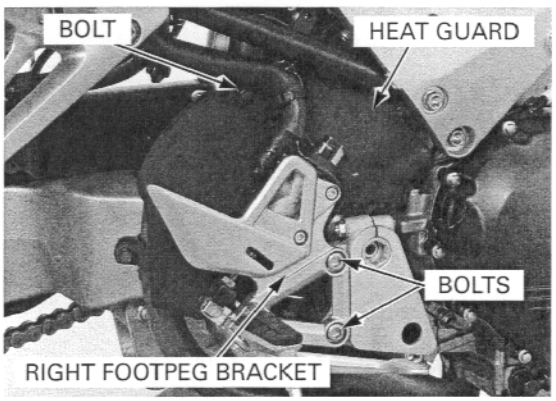

Route the O_2 sensor wires into the frame.
Connect the O_2 sensor 4P (Natural) and 4P (Black) connectors.

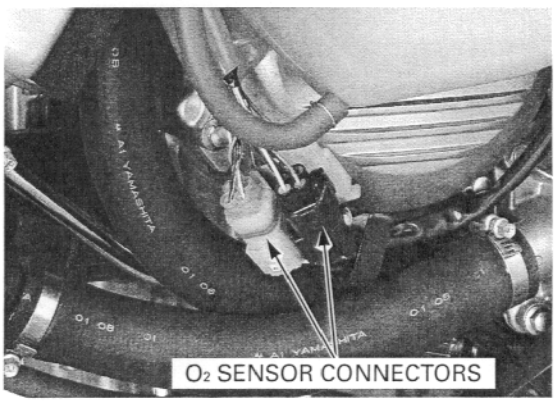

MUFFLER INSTALLTION

Install the new gasket onto the muffler joint.
Install the muffler into the front exhaust pipe.

Install the muffler mounting socket bolts and nuts.
Hold the socket bolts and tighten the nuts securely.

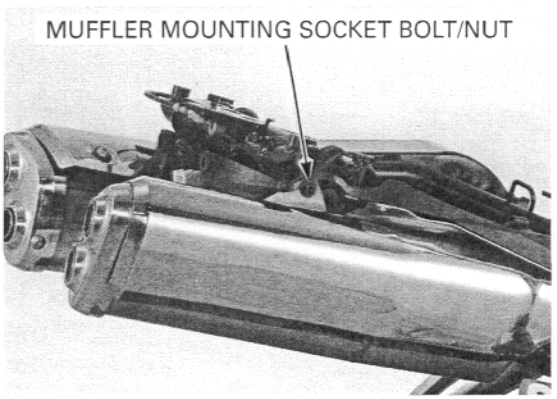

Tighten the muffler band clamp bolts securely.

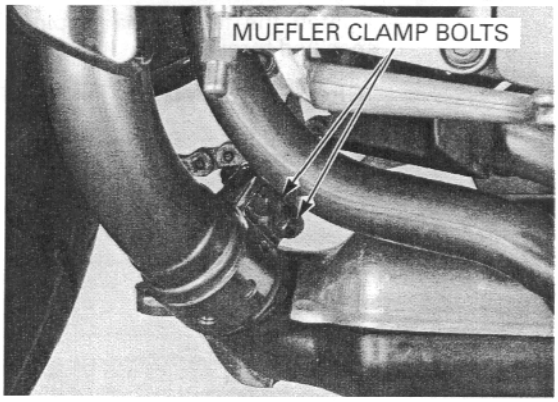

SERVICE INFORMATION 3-2
MAINTENANCE SCHEDULE 3-4
FUEL LINE 3-5
THROTTLE OPERATION 3-6
AIR CLEANER 3-6
SPARK PLUG 3-7
VALVE CLEARANCE 3-9
ENGINE OIL/OIL FILTER 3-14
ENGINE IDLE SPEED 3-17
RADIATOR COOLANT 3-17
COOLING SYSTEM 3-17
SECONDARY AIR SUPPLY SYSTEM 3-18
EVAPORATIVE EMISSION CONTROL SYSTEM (CALIFORNIA TYPE ONLY) 3-19
DRIVE CHAIN 3-19
BRAKE FLUID 3-25
BRAKE PAD WEAR 3-26
BRAKE SYSTEM 3-27
BRAKE LIGHT SWITCH 3-28
HEADLIGHT AIM 3-29
CLUTCH SYSTEM 3-29
CLUTCH FLUID 3-30
SIDE STAND 3-30
SUSPENSION 3-31
NUTS, BOLTS, FASTENERS 3-33
WHEELS/TIRES 3-34
STEERING HEAD BEARINGS 3-34

SERVICE INFORMATION

GENERAL

- Place the motorcycle on level ground before starting any work.
- Gasoline is extremely flammable and is explosive under certain conditions. Work in a well ventilated area. Smoking or allowing flames or sparks in the work area or where the gasoline is stored can cause a fire or explosion.
- The exhaust contains poisonous carbon monoxide gas that may cause loss of consciousness and may lead to death. Run the engine in an open area or with an exhaust evacuation system in and enclosed area.

SPECIFICATIONS

ITEM			SPECIFICATIONS
Throttle grip free play			2 – 6 mm (1/16 – 1/4 in)
Spark plug	NGK		IMR9B-9H
	DENSO		VNH27Z
Spark plug gap			0.80 – 0.90 mm (0.031 – 0.035 in)
Valve clearance	Normal side	IN	0.20 ± 0.03 mm (0.008 ± 0.001 in)
		EX	0.35 ± 0.03 mm (0.013 ± 0.001 in)
	VTEC side	IN	0.20 ± 0.08 mm (0.008 ± 0.003 in)
		EX	0.35 ± 0.08 mm (0.013 ± 0.003 in)
Engine oil capacity	After draining		2.9 liter (3.1 US qt, 2.6 Imp qt)
	After draining/oil filter change		3.1 liter (3.3 US qt, 2.7 Imp qt)
Recommended engine oil			HONDA GN4 or HP4 (Without Moly) 4-stroke oil (U.S.A. and Canada) or Honda 4-stroke oil (Canada only), or equivalent motor oil API service classification: SF, SG or Higher JASO 4T service classification: MA Viscosity: SAE 10W–40
Engine idle speed			1,200 ± 100 rpm
Drive chain slack			25 – 35 mm (1 – 1-3/8 in)
Recommended brake fluid			DOT 4
Tire size		Front	120/70 ZR 17 M/C (58W)
		Rear	180/55 ZR 17 M/C (73W)
Tire brand	Bridgestone	Front	BT020F BB
		Rear	BT020R BB
	Dunlop	Front	D204FK
		Rear	D204K
	Metzeler	Front	MEZ4A FRONT
		Rear	MEZ4A
Tire air pressure	Driver only	Front	250 kPa (2.50 kgf/cm^2, 36 psi)
		Rear	290 kPa (2.90 kgf/cm^2, 42 psi)
	Driver and passenger	Front	250 kPa (2.50 kgf/cm^2, 36 psi)
		Rear	290 kPa (2.90 kgf/cm^2, 42 psi)
Minimum tire tread depth		Front	1.5 mm (0.06 in)
		Rear	2.0 mm (0.08 in)

TORQUE VALUES

Timing hole cap	18 N·m (1.8 kgf·m, 13 lbf·ft)	Apply grease to the threads
Spark plug	12 N·m (1.2 kgf·m, 9 lbf·ft)	
Cylinder head cove bolt	10 N·m (1.0 kgf·m, 7 lbf·ft)	
Engine oil drain bolt	29 N·m (3.0 kgf·m, 22 lbf·ft)	
Engine oil filter cartridge	26 N·m (2.7 kgf·m, 20 lbf·ft)	Apply clean engine oil to the threads and flange surface
Rear axle bearing holder pinch bolt	74 N·m (7.5 kgf·m, 54 lbf·ft)	
Drive sprocket special bolt	51 N·m (5.2 kgf·m, 38 lbf·ft)	
Final driven sprocket nut	64 N·m (6.5 kgf·m, 47 lbf·ft)	
Rear master cylinder push rod joint nut	18 N·m (1.8 kgf·m, 13 lbf·ft)	

TOOLS

Oil filter wrench	07HAA-PJ70101
Slide pin stopper	07XMZ-MCE0100
Drive chain tool set	07HMH-MR10103

MAINTENANCE SCHEDULE

Perform the Pre-ride inspection in the Owner's Manual at each scheduled maintenance period.

I: Inspect and Clean, Adjust, Lubricate or Replace if necessary. C: Clean. R: Replace. A: Adjust. L: Lubricate.

The following items require some mechanical knowledge. Certain items (particularly those marked * and **) may require more technical information and tools. Consult their authorized HONDA dealer.

		ITEMS / FREQUENCY	NOTE ⇩	X1,000 mi	0.6	4	8	12	16	20	24	REFER TO PAGE
				X1,000 km	10	64	128	192	256	320	384	
EMSSION RELATED ITEMS	*	FUEL LINE					I		I		I	3-5
	*	THROTTLE OPERATION					I		I		I	3-6
		AIR CLEANER	NOTE2					R			R	3-6
		SPARK PLUG			EVERY 25,600 km (16,000 mi) I, EVERY 51,200 km (32,000 mi) R							3-7
	*	VALVE CLEARANCE							I			3-9
		ENGINE OIL			R		R		R		R	3-14
		ENGINE OIL FILTER			R		R		R		R	3-15
	*	ENGINE IDLE SPEED			I	I	I	I	I	I	I	3-17
		RADIATOR COOLANT	NOTE3				I		I		R	3-17
	*	COOLING SYSTEM					I		I		I	3-17
	*	SECONDARY AIR SUPPLY SYSTEM					I		I		I	3-18
	*	EVAPORATIVE EMISSION CONTROL SYSTEM	NOTE4					I			I	3-18
NON-EMSSION RELATED ITEMS		DRIVE CHAIN			EVERY 500 mi (800 km) I, L							3-19
		BRAKE FLUID	NOTE3			I	I	R	I	I	R	3-25
		BRAKE PAD WEAR				I	I	I	I	I	I	3-26
		BRAKE SYSTEM			I		I		I		I	3-27
	*	BRAKE LIGHT SWITCH					I		I		I	3-28
	*	HEADLIGHT AIM					I		I		I	3-29
		CLUTCH SYSTEM					I		I		I	3-29
		CLUTCH FLUID	NOTE 3			I	I	R	I	I	R	3-30
		SIDE STAND					I		I		I	3-30
	*	SUSPENSION					I		I		I	3-31
	*	NUT, BOLTS, FASTENERS			I		I		I		I	3-33
	**	WHEELS/TIRES					I		I		I	3-34
	**	STEERING HEAD BEARINGS			I		I		I		I	3-34

* Should be serviced by an authorized HONDA dealer, unless the owner has proper tools and service data and is mechanically qualified

** In the interest of safety, we recommended these items be serviced only by an authorized HONDA dealer

NOTES:

1. At higher odometer reading, repeat at the frequency interval established here.
2. Service more frequency if the motorcycle is ridden in unusually wet or dusty areas.
3. Replace every 2 years, or at indicated odometer interval, whichever comes first. Replacement requires mechanical skill.
4. California type only.

FUEL LINE

Remove the seat (page 2-5).

Remove the two fuel tank front mounting bolts, washers and collars.

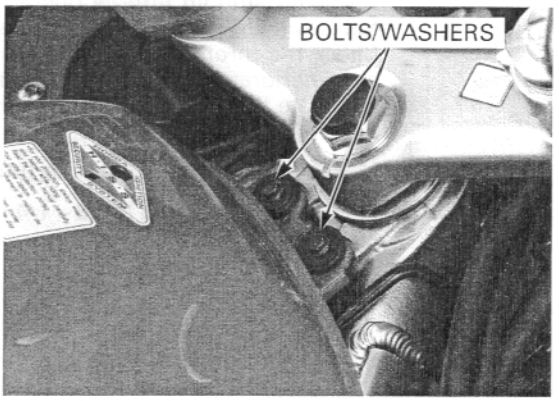

Lift the fuel tank and temporarily install the either of the mounting bolts.
Open and support the fuel tank using the equipped tools (pin spanner and extension) as shown.

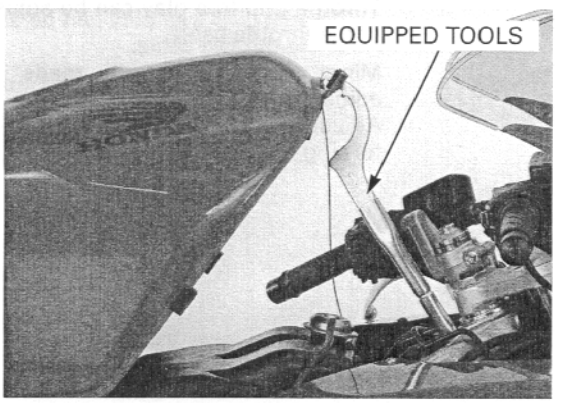

Check the fuel lines for deterioration, damage or leakage. Replace the fuel line if necessary.
Also check the fuel line fittings for leakage.

Be careful not to pinch the air vent and overflow hoses.

Remove the support tools and bolt, then close the fuel tank.

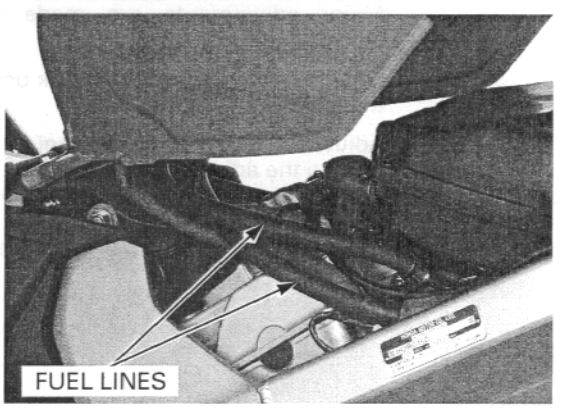

Install the fuel tank mounting collars, bolts and washers.
Tighten the bolts securely.

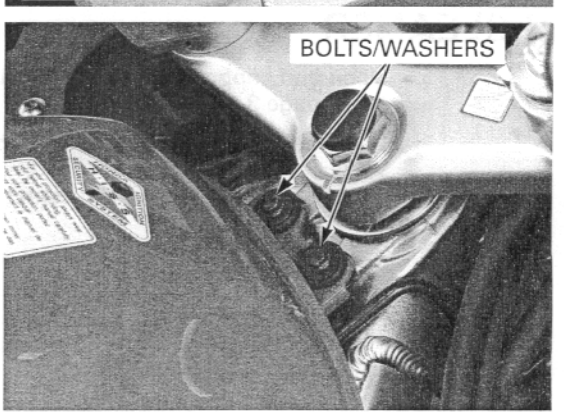

THROTTLE OPERATION

Check for smooth throttle operation and automatic full closing in all steering positions.
Check the throttle cables and replace them if they are deteriorated, kinked or damaged.
Lubricate the throttle cables, if throttle operation is not smooth.

Measure the free play at the throttle grip flange.

FREE PLAY: 2 – 6 mm (1/16 – 1/4 in)

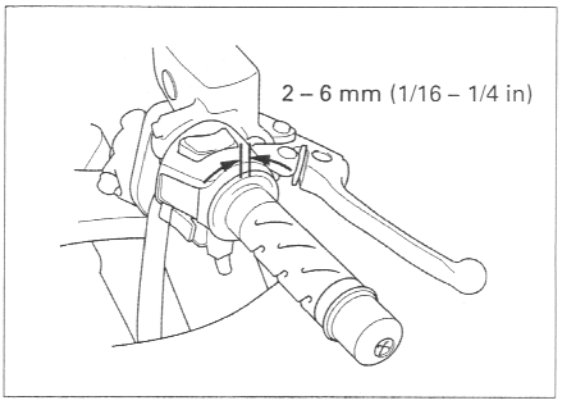

Throttle grip free play can be adjusted at either end of the throttle cable.

Minor adjustments are made with the upper adjuster.
Adjust the free play by loosening the lock nut and turning the adjuster.

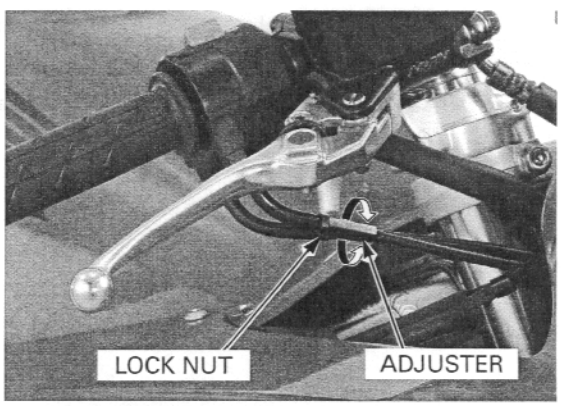

Major adjustments are made with the lower adjuster on the throttle body.

Open and support the fuel tank using the equipped tools (page 3-5).

Adjust the free play by loosening the lock nut and turning the adjuster.
After adjustment, tighten the lock nut securely.
Recheck the throttle operation.
Replace any damaged parts, if necessary.

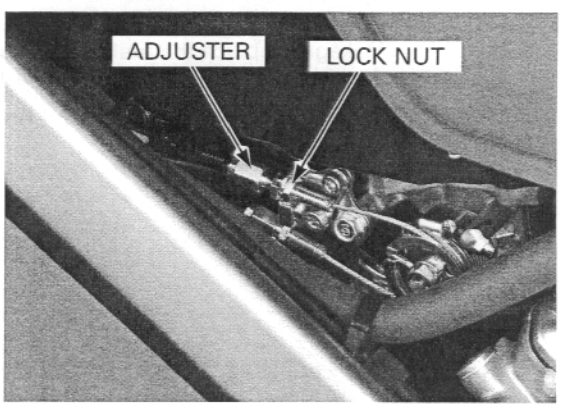

AIR CLEANER

Open and support the fuel tank using the equipped tools (page 3-5).

Disconnect the vacuum hose from the air intake valve.
Remove the screws and air cleaner housing cover.

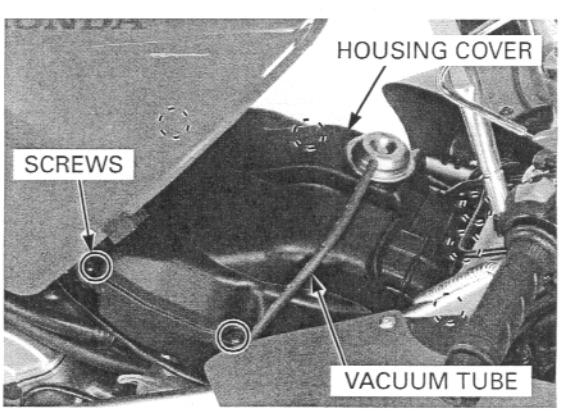

Remove and discard the air cleaner element in accordance with the maintenance schedule (page 3-4).
Also replace the air cleaner element any time it is excessively dirty or damage.

Install the removed parts in the reverse order of removal.

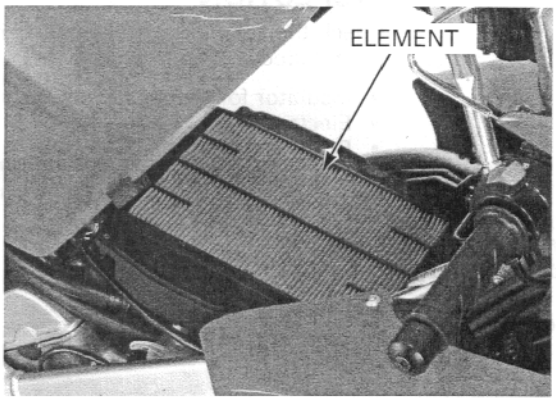

SPARK PLUG

REMOVAL

Front cylinder:

Remove the side cowls (page 2-8).

Clean around the spark plug bases with compressed air before removing, and be sure that no debris is allowed to enter the combustion chamber.

Disconnect the direct ignition coil connectors.

Remove the bolts and direct ignition coils from the spark plug.

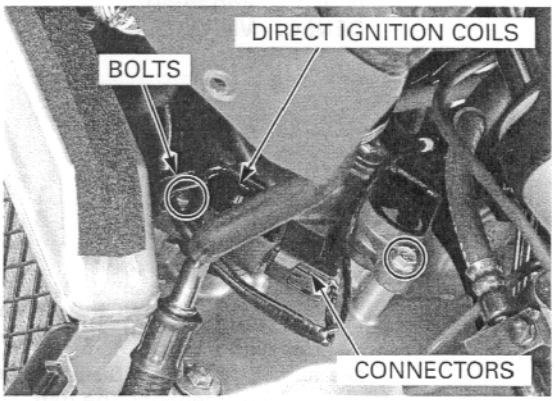

Rear cylinder:

Open and support the fuel tank using the equipped tools (page 3-5).

Clean around the spark plug bases with compressed air before removing, and be sure that no debris is allowed to enter the combustion chamber.

Disconnect the direct ignition coil connectors.
Remove the bolts and direct ignition coils from the spark plug.

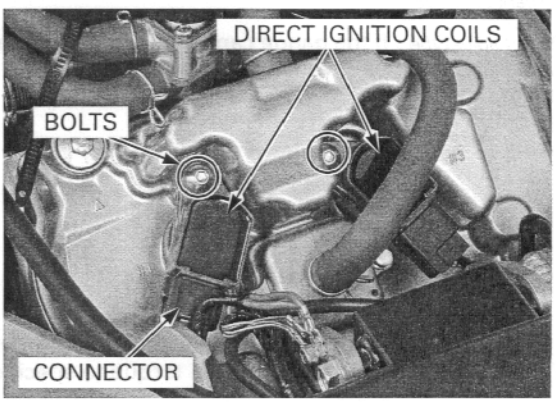

Front and rear cylinder:

Remove the spark plugs using the equipped spark plug wrench or an equivalent.

Inspect or replace as described in the maintenance schedule (page 3-4).

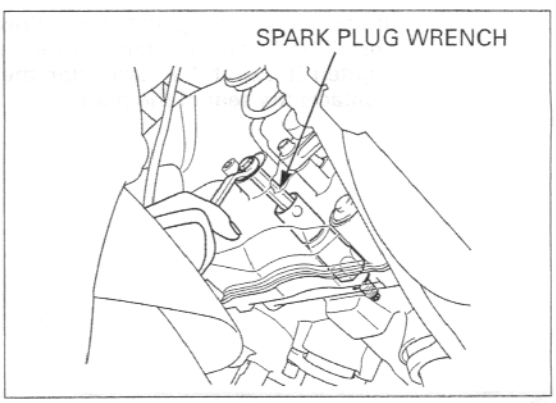

INSPECTION

Check the following and replace if necessary (recommended spark plug: page 3-2)

- Insulator for damage
- Electrodes for wear
- Burning condition, coloration

If the electrodes is contaminated with accumulated objects or dirt, replace the spark plug.

This motorcycle's spark plug has an iridium center electrode. Replace the spark plug if the electrode is contaminated.

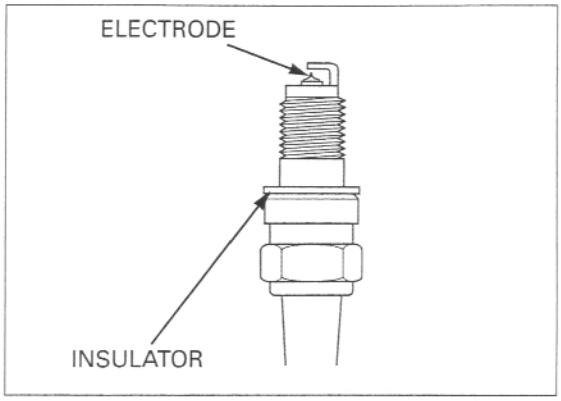

Replace the plug if the center electrode is rounded as shown in the illustration.

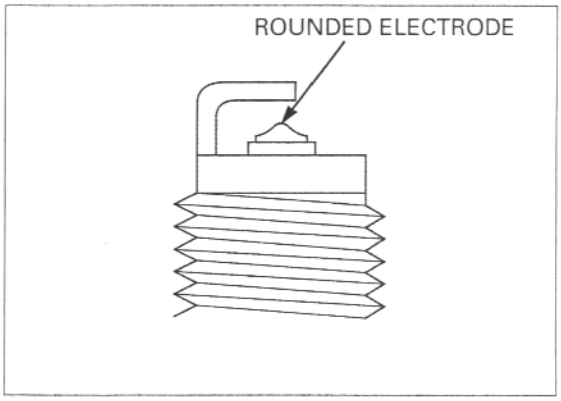

Always use specified spark plugs on this motorcycle.

SPECIFIED SPARK PLUG:
NGK: IMR9B-9H
DENSO: VNH27Z

To prevent damaging the iridium center electrode, use a wire type feeler gauge to check the spark plug gap.

Check the gap between the center and side electrodes with a wire type feeler gauge.

Make sure that the ϕ 1.0 mm (0.04 in) plug gauge does not insert between the gap.

Do not adjust the spark plug gap. If the gap is out of specification, replace it with a new one.

If the gauge can be inserted into the gap, replace the plug with a new one.

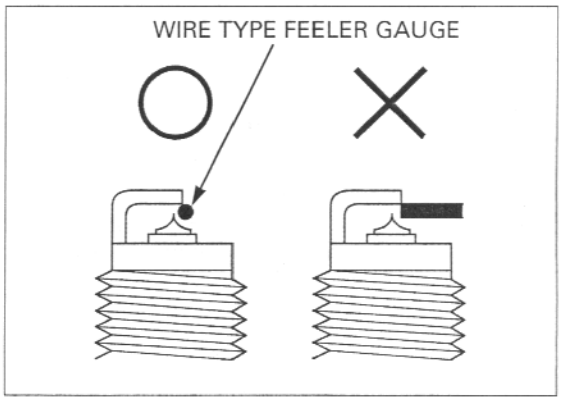

INSTALLATION

Front and rear cylinder:

Reinstall the spark plug in the cylinder head and hand tighten, then torque to specification.

TORQUE: 12 N·m (1.2 kgf·m, 9 lbf·ft)

If using a new plug, install as follows:
Install and hand tighten the new spark plug, then tighten it about 1/2 turn after the sealing washer contacts the seat of the plug hole.

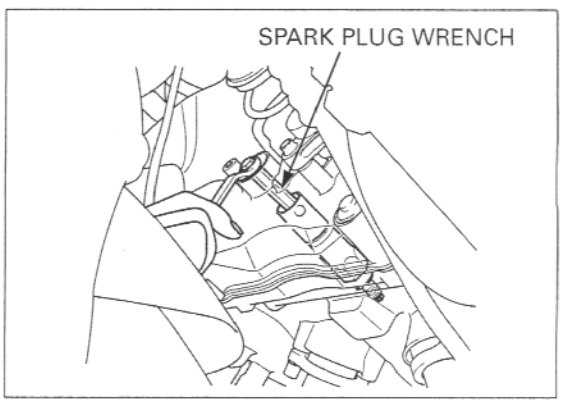

Rear cylinder:

Install the direct ignition coils and tighten the bolts securely.
Connect the connectors to each direct ignition coil.

Close the fuel tank (page 3-5).

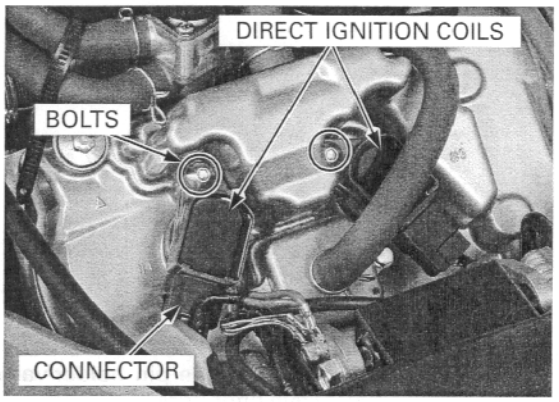

Front cylinder:

Install the direct ignition coils and tighten the bolts securely.
Connect the connectors to each direct ignition coil.

Install the side cowls (page 2-10).

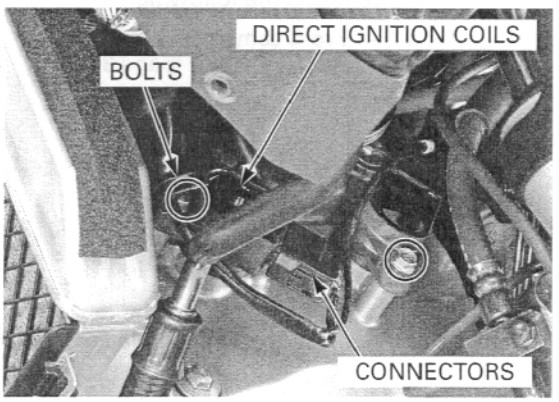

VALVE CLEARANCE

Inspect and adjust the valve clearance while the engine is cold (below 35°C/95°F)

INSPECTION

Remove the following:

- Front camshaft (page 8-11)
- Rear camshaft (page 8-14)

Remove the valve lifters and slide pin holders from the VTEC valve lifter bore.

Remove the VTEC slide pin holder from the valve lifter.

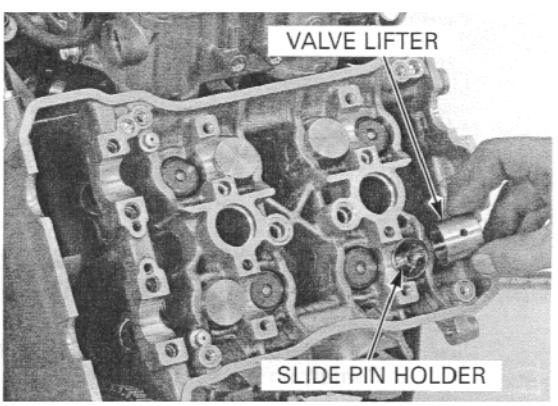

Install the slide pin stopper into the slide pin hole.

TOOL:

Slide pin stopper	**07XMZ-MCE0100**

While pushing the slide pin stopper into the slide pin hole, install the slide pin holder into the valve lifter and lock the slide pin holder.

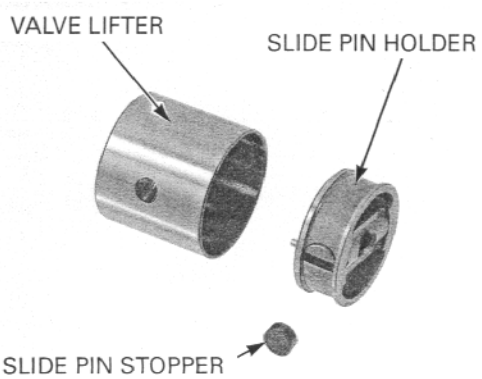

Remove the VTEC side outer valve springs.

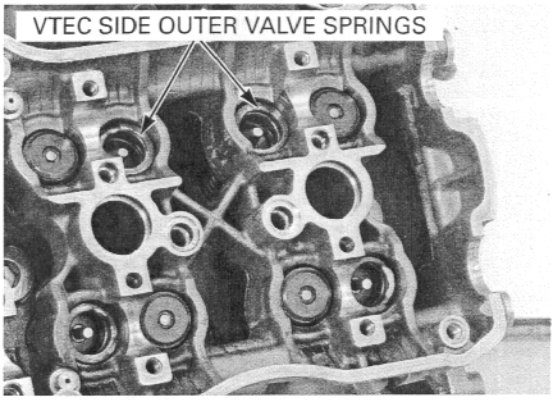

Reinstall the slide pin holder/valve lifter into VTEC side valve lifter bore.

Reinstall the following:

- Front camshaft (page 8-37)
- Rear camshaft (page 8-42)

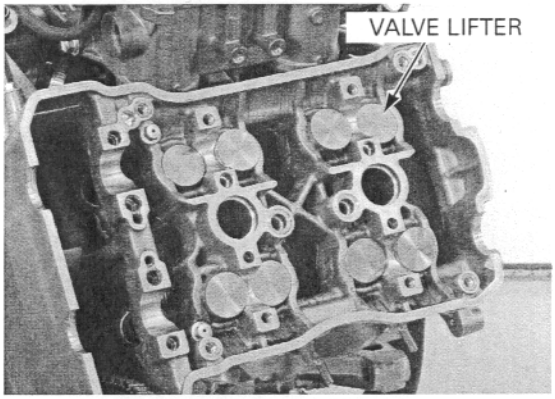

Remove the timing hole cap and O-ring.

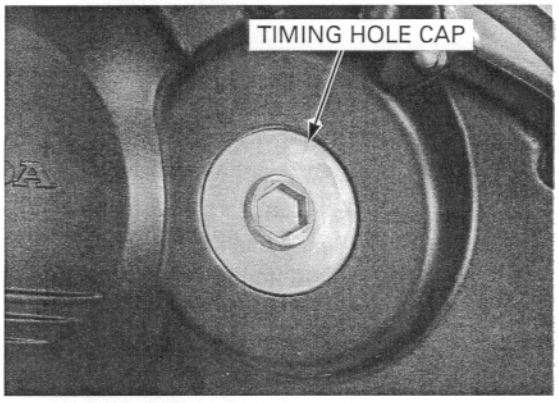

Turn the crankshaft clockwise, align the "1T" mark on the ignition pulse generator rotor with the index mark on the right crankcase cover.

Make sure that the No.1 piston is at TDC (Top Dead Center) on the compression stroke.

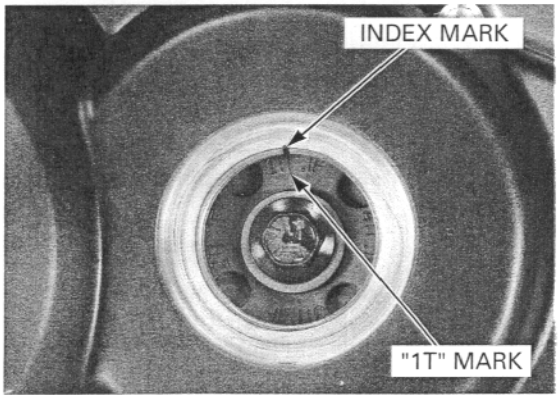

Insert the feeler gauge between the valve lifter and the cam lobe.

Record the clearance for each valve for reference in shim selection if adjustment is required.

Check the valve clearance for the No.1 cylinder intake and exhaust valves using a feeler gauge.

VALVE CLEARANCE:
Normal side:
IN: 0.20 ± 0.03 mm (0.008 ± 0.001 in)
EX: 0.35 ± 0.03 mm (0.013 ± 0.001 in)
VTEC side:
IN: 0.20 ± 0.08 mm (0.008 ± 0.003 in)
EX: 0.35 ± 0.08 mm (0.013 ± 0.003 in)

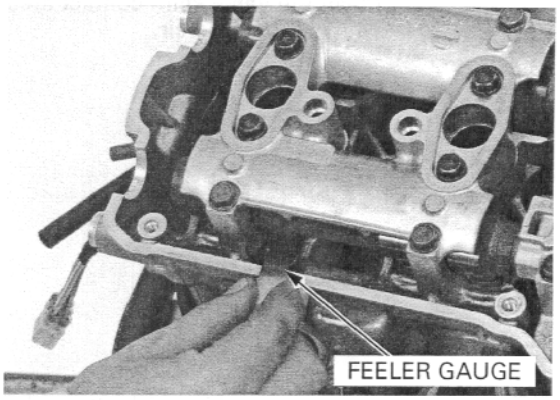

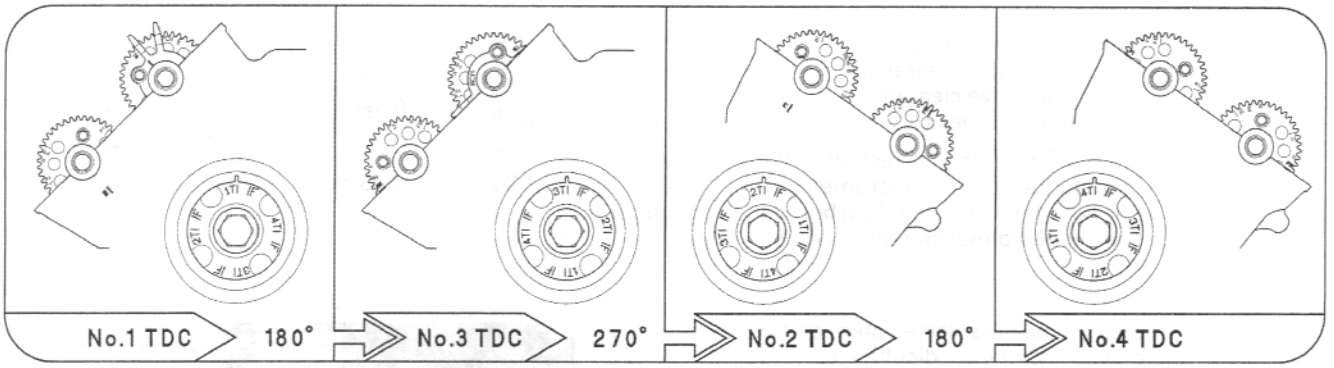

Turn the crankshaft clockwise 1/2 turn (180°), align the "3T" mark on the ignition pulse generator rotor with the index mark on the right crankcase cover. Check the valve clearance for the No.3 cylinder.

Turn the crankshaft clockwise 3/4 turn (270°), align the "2T" mark on the ignition pulse generator rotor with the index mark on the right crankcase cover. Check the valve clearance for the No.2 cylinder.

Turn the crankshaft clockwise 1/2 turn (180°), align the "4T" mark on the ignition pulse generator rotor with the index mark on the right crankcase cover. Check the valve clearance for the No.4 cylinder.

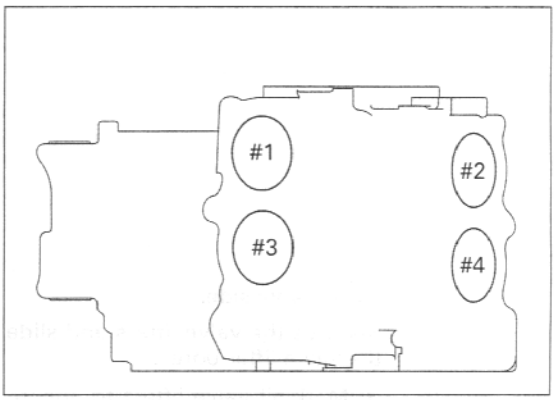

ADJUSTMENT

Normal valve side:

Remove the front camshaft (page 8-11) and rear camshaft (page 8-14).

Remove the valve lifters and shims from the normal side valve lifter bores.

- Shim may stick to the inside of the valve lifter. Do not allow the shims to fall into the crankcase.
- Mark all valve lifters and shims to ensure correct reassembly in their original locations.
- The valve lifter can be easily removed with a valve lapping tool or magnet.
- The shims can be easily removed with tweezers or a magnet.

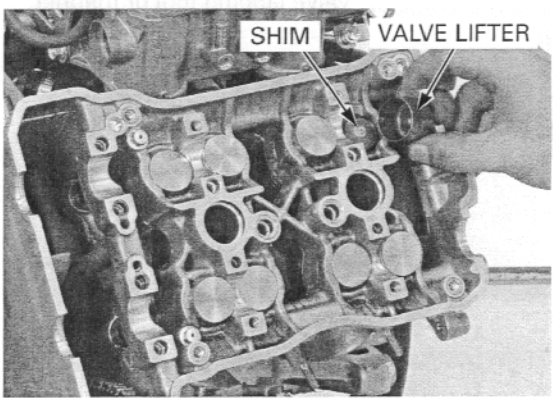

Clean the valve shim contact area in the valve lifter with compressed air.

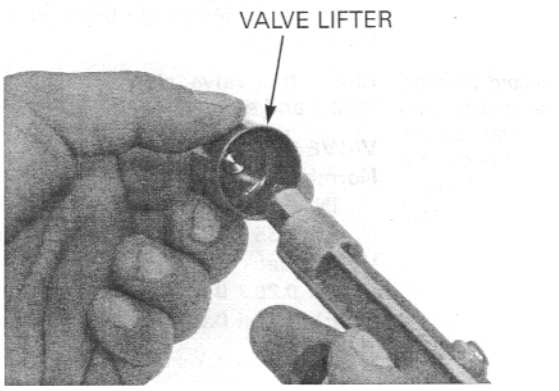

Sixty-five different thickness shims are available from the 1.200 mm to 2.800 mm in increments of 0.025 mm.

Measure the shim thickness and record it.

Calculate the new shim thickness using the equation below.
A = (B – C) + D
A: New shim thickness
B: Recorded valve clearance
C: Specified valve clearance
D: Old shim thickness

- Make sure of the correct shim thickness by measuring the shim by micrometer.
- Reface the valve seat if carbon deposit result in a calculated dimension of over 2.800 mm.

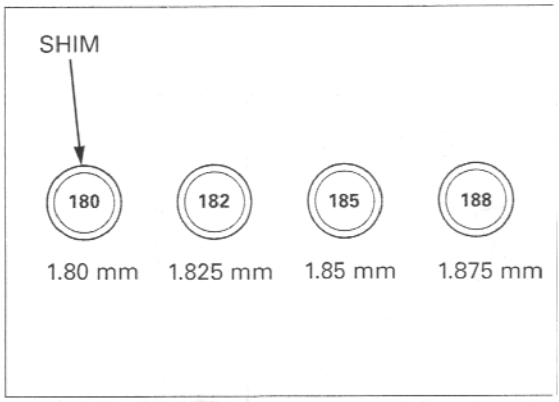

Install the shims and valve lifters in their original locations

Install the newly selected shim on the valve retainer.
Apply molybdenum disulfide oil to the valve lifters.
Install the valve lifters into the valve lifter holes.

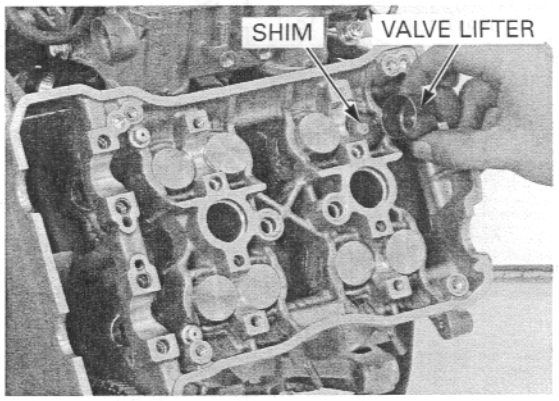

VTEC valve side:

Remove the valve lifters and slide pin holders from the valve lifter bores.

- Mark all valve lifters to ensure correct reassembly in their original locations.
- The valve lifter can be easily removed with a valve lapping tool or magnet.

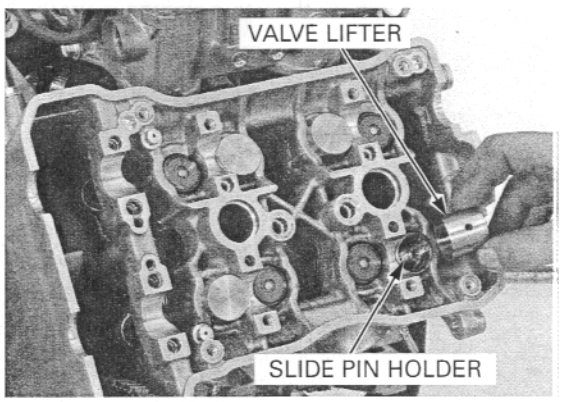

Clean the valve contact area in the slide pin holder with compressed air.

Clean the slide pin holder contact area in the valve lifter with compressed air.

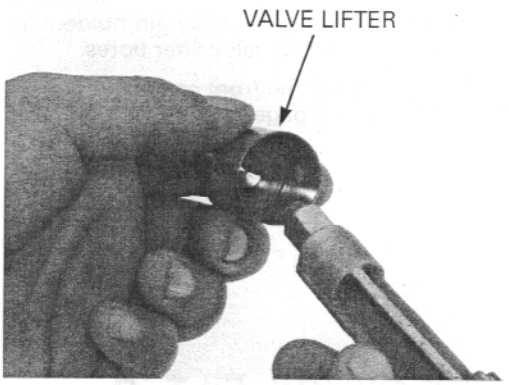

Sixty-five different valve lifter thicknesses ers are available from the 1.200 mm to 2.800 mm in increments of 0.025 mm.

Measure the valve lifter thickness and record it.

Calculate the new valve lifter thickness using the equation below.
A = (B – C) + D
A: New valve lifter thickness
B: Recorded valve clearance
C: Specified valve clearance
D: Old valve lifter thickness

- Make sure of the correct valve lifter thickness by measuring the valve lifter by micrometer.
- Reface the valve seat if carbon deposits result in a calculated dimension of over 2.800 mm.

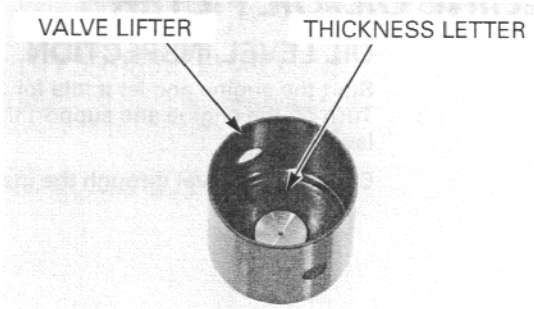

Install the newly selected valve lifter on the valve retainer.

Install the valve lifters in their original locations

Install the slide pin holder into the newly selected valve lifter.

Apply molybdenum disulfide oil to the valve lifters.

Install the valve lifters into the valve lifter holes.

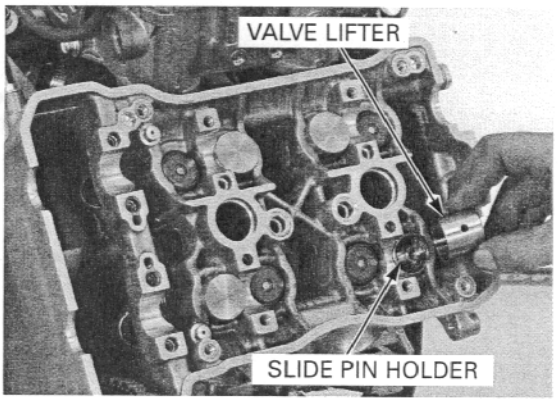

Install the front camshaft (page 8-37) and rear camshaft (page 8-42).

Rotate the camshafts by rotating the crankshaft clockwise several times.
Recheck the valve clearance.

Remove the front camshaft (page 8-11) and rear camshaft (page 8-14).

Remove the VTEC side valve lifter and slide pin holders.

Remove the slide pin stoppers from the slide pin holders.

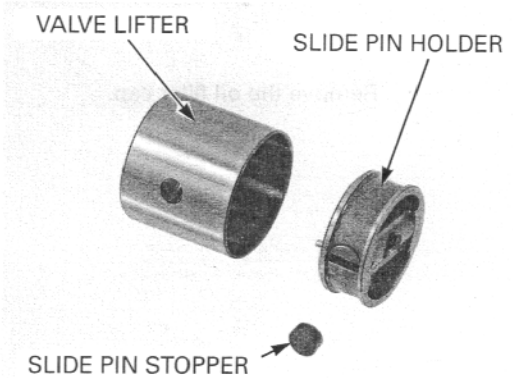

Install the VTEC side outer valve springs.

Make sure to remove the slide pin stoppers from the VTEC valve lifters.

Reinstall the slide pin holders and valve lifters into the VTEC valve lifter bores.

Install the front camshaft (page 8-37) and rear camshaft (page 8-42).

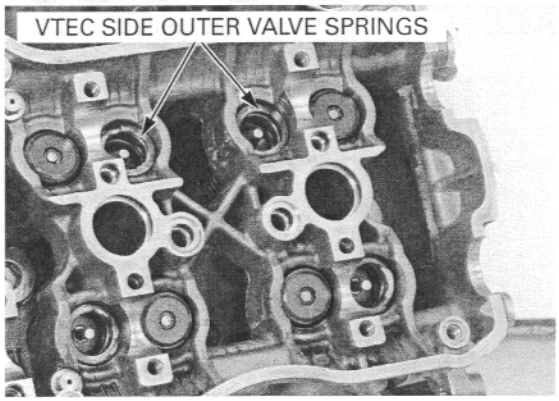

ENGINE OIL/OIL FILTER

OIL LEVEL INSPECTION

Start the engine and let it idle for 2 – 3 minutes. Turn off the engine and support the motorcycle on a level surface.

Check the oil level through the inspection window.

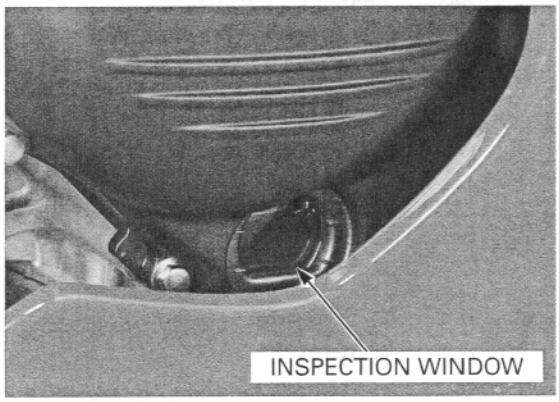

If the level is below the lower line, remove the oil filler cap and fill the crankcase with recommended oil up to the upper level line.

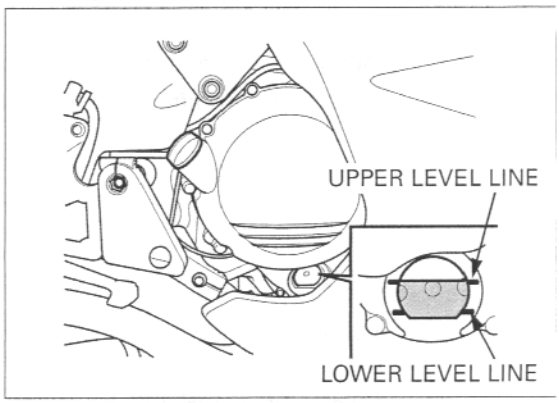

Remove the oil filler cap.

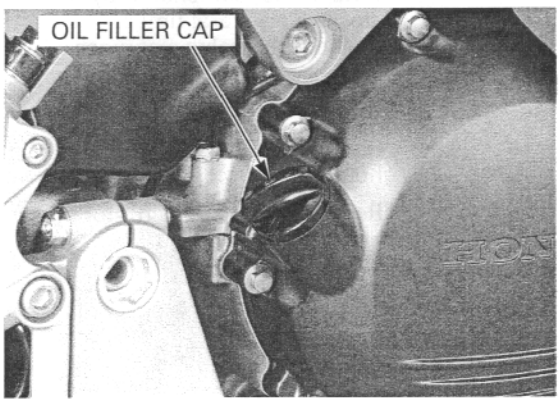

Fill the recommended engine oil up to the upper level line.

Other viscosities shown in the chart may be used when the average temperature in your riding area is within the indicated range.

RECOMMENDED ENGINE OIL:
HONDA GN-4 or HP4 (Without Moly) 4-stroke oil (U.S.A. and Canada) or Honda 4-stroke oil (Canada only) or equivalent motor oil
API service classification: SF, SG or Higher
JASO 4T service classification: MA
Viscosity: SAE 10W–40

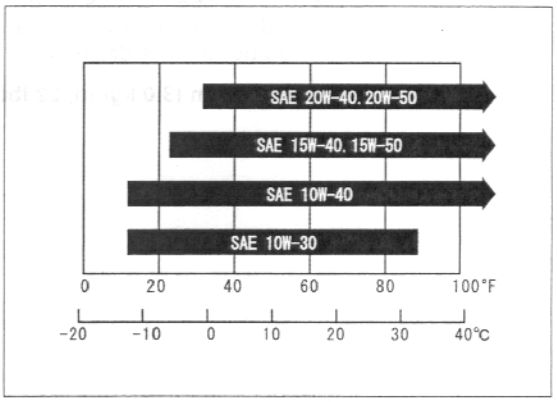

Reinstall the filler cap.

ENGINE OIL & FILTER CHANGE

Warm up the engine.
Remove the side cowl and inner half cowl (page 2-8).

Change the engine oil when the engine is warm and the motorcycle is on level ground to assure complete draining

Stop the engine and remove the oil filler cap.

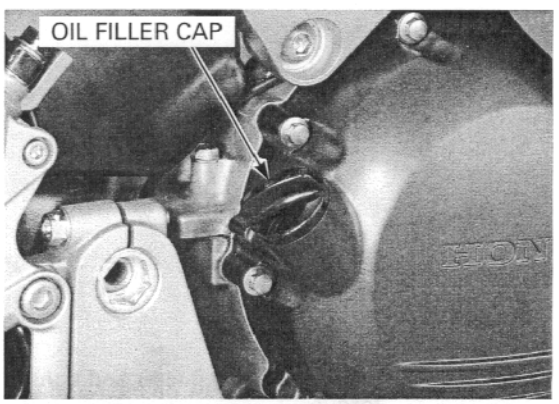

Remove the drain bolt, drain the oil completely.

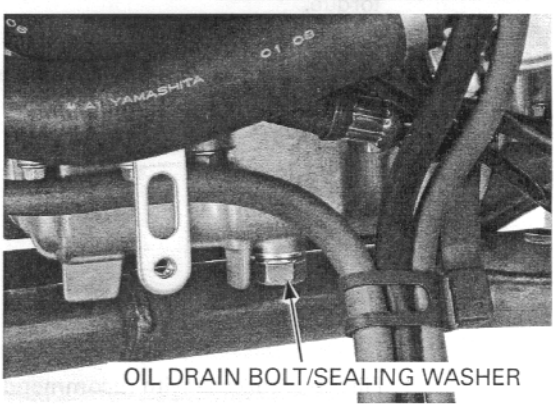

Remove and discard the oil filter cartridge using the special tool.

TOOL:
Oil filter wrench **07HAA-PJ70100**

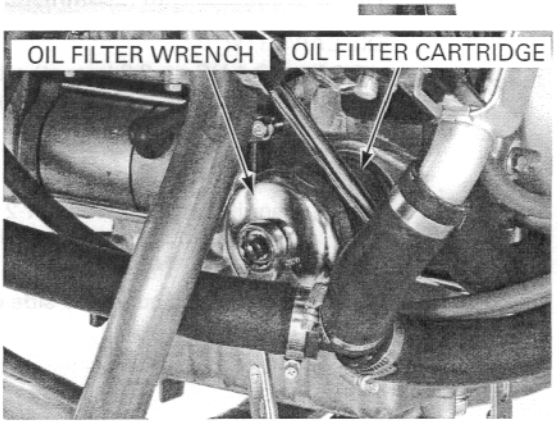

Check that the sealing washer on the drain bolt is in good condition, and replace if necessary.
Install and tighten the drain bolt.

TORQUE: 29 N·m (3.0 kgf·m, 22 lbf·ft)

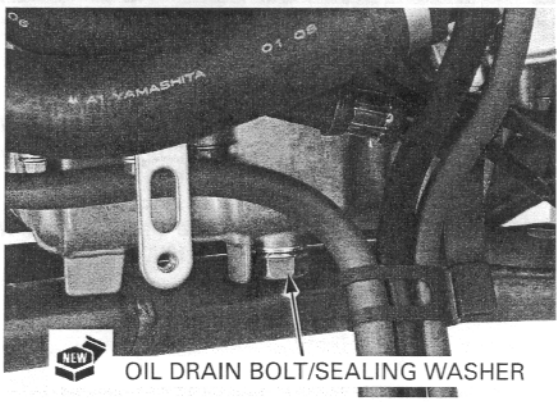

Apply clean engine oil to the new oil filter O-ring.

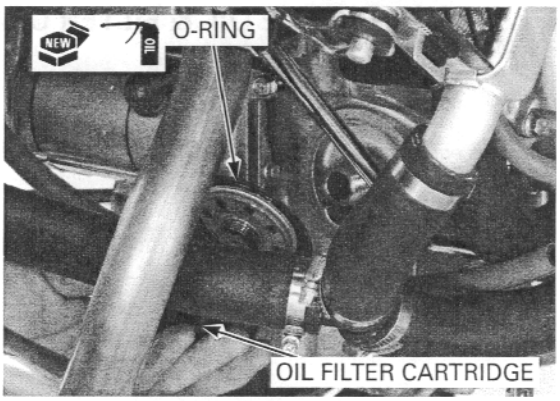

Install the new oil filter and tighten it to the specified torque.

TOOL:
Oil filter wrench **07HAA-PJ70100**

TORQUE: 26 N·m (2.7 kgf·m, 20 lbf·ft)

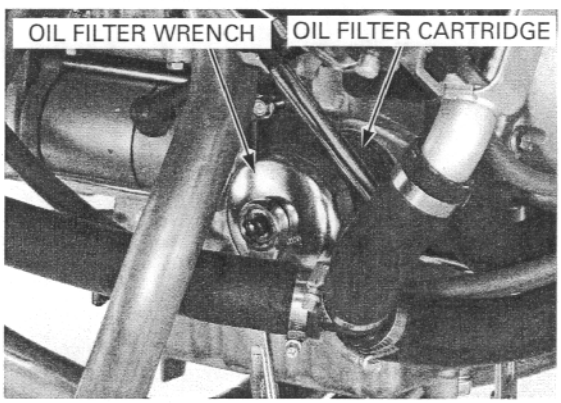

Fill the crankcase with recommended engine oil.

OIL CAPACITY:
2.9 liter (3.1 US qt, 2.6 Imp qt) after draining
3.1 liter (3.3 US qt, 2.7 Imp qt) after draining/filter change

Install the oil filler cap.

Start the engine and let it idle for 2 to 3 minutes.
Stop the engine and recheck the oil level.
Make sure there are no oil leaks.

Install the inner half cowl and side cowl (page 2-10).

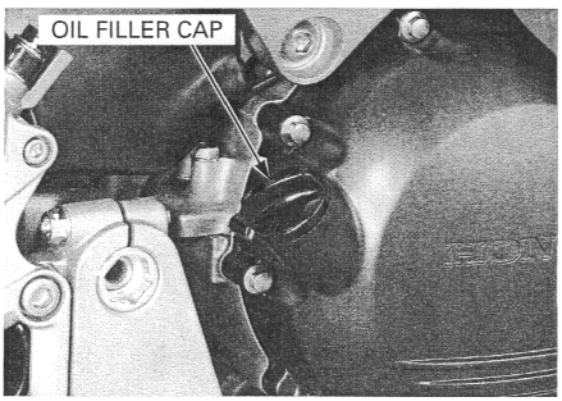

ENGINE IDLE SPEED

- Inspect and adjust the idle speed after all other engine maintenance items have been performed and are within specifications.
- The engine must be warm for accurate idle speed inspection and adjustment.

Warm up the engine for about ten minutes.

Turn the throttle stop screw as required to obtain the specified idle speed.

IDLE SPEED: 1,200 ± 100 rpm

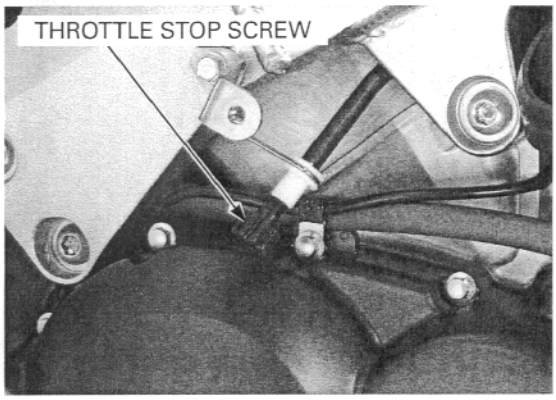

RADIATOR COOLANT

Check the coolant level of the reserve tank with the engine running at normal operating temperature.

The level should be between the "UPPER" and "LOWER" level lines.

If necessary, add recommended coolant.

RECOMMENDED ANTIFREEZE:
High quality ethylene glycol antifreeze containing corrosion protection inhibitors.

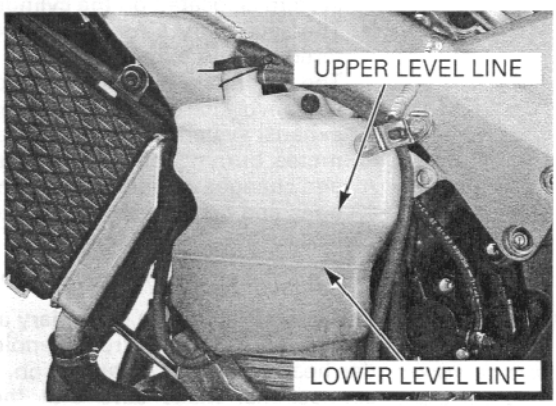

Remove the reserve tank filler cap and fill to the "UPPER" level line with 50/50 mixture of distilled water and antifreeze.

Reinstall the filler cap.

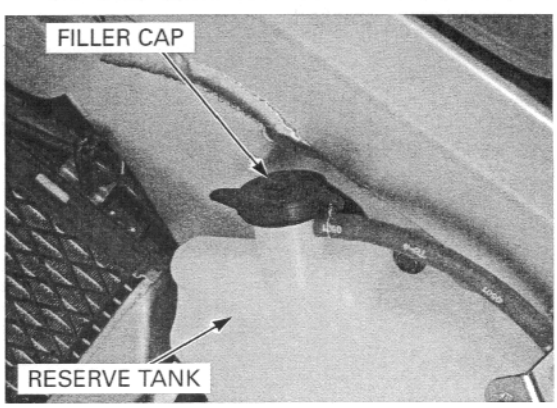

COOLING SYSTEM

Remove the side cowl and inner half cowl (page 2-8).

Check the radiator air passages for clogging or damage.
Straighten bent fins, and remove insects, mud or other obstructions with compressed air or low water pressure.
Replace the radiator if the air flow is restricted over more than 20% of the radiating surface.

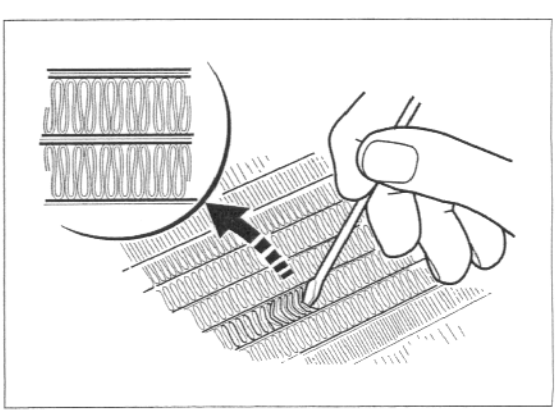

Inspect the radiator hoses for cracks or deterioration, and replace if necessary.
Check the tightness of all hose clamps and fasteners.

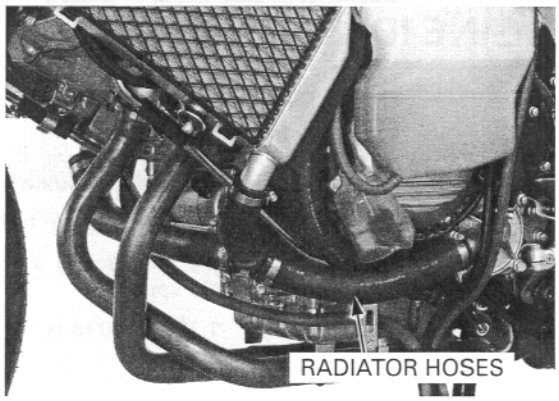

SECONDARY AIR SUPPLY SYSTEM

- This model is equipped built-in secondary air supply system. The pulse secondary air supply system is located on the cylinder head cover.
- The secondary air supply system introduces filtered air into exhaust gases in the exhaust port. The secondary air is drawn into the exhaust port whenever there is negative pressure pulse in the exhaust system. This charged secondary air promotes burning of the unburned exhaust gases and changes a considerable amount of hydrocarbons and carbon monoxide into relatively harmless carbon dioxide and water.

Remove the air cleaner housing (page 5-60).

If the hoses show any signs of heat damage, inspect the PAIR check valve in the PAIR reed valve cover for damage.

Check the PAIR (pulse secondary air injection) tubes between the PAIR control solenoid valve and cylinder head cover for deterioration, damage or loose connections. Make sure that the hoses are not cracked.

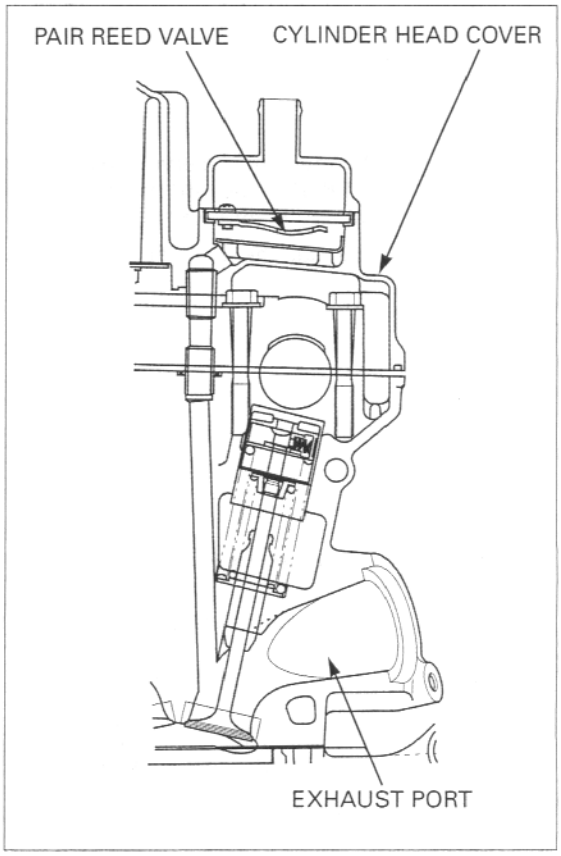

Check the air suction hose between the air cleaner housing and PAIR control solenoid valve for deterioration, damage or loose connections.
Make sure that the hoses are not kinked, pinched or cracked.

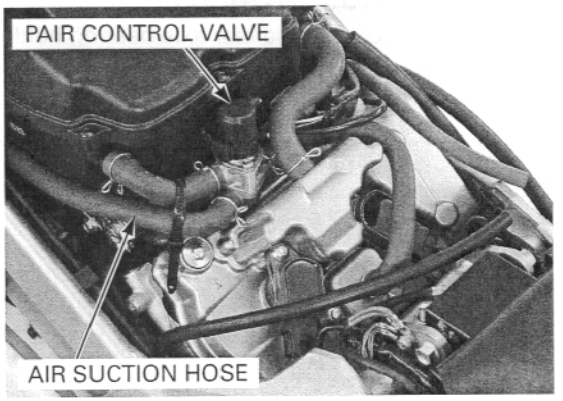

EVAPORATIVE EMISSION CONTROL SYSTEM (CALIFORNIA TYPE ONLY)

Check the hoses between the fuel tank, EVAP canister, EVAP purge control solenoid valve for deterioration, damage or loose connections.

Check the EVAP canister for cracks or other damage.

Refer to the Vacuum Hose Routing Diagram Label (page 1-45) and Cable & Harness Routing (page 1-25) for hose connections.

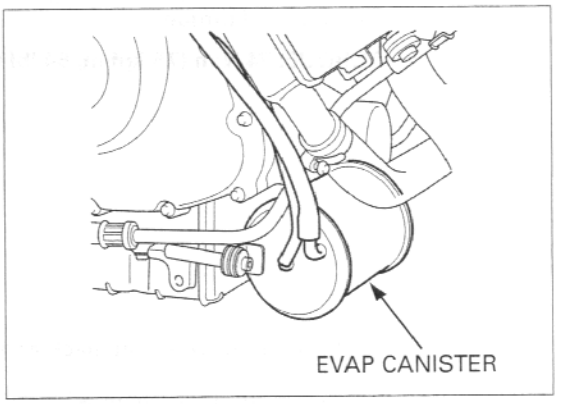

DRIVE CHAIN

Never inspect and adjust the drive chain while the engine is running.

DRIVE CHAIN SLACK INSPECTION

Turn the ignition switch OFF, place the motorcycle on its centerstand and shift the transmission into neutral.

Check the slack in the drive chain lower run midway between the sprockets.

CHAIN SLACK: 25 – 35 mm (1 – 1-3/8 in)

NOTICE

Excessive chain slack, 50 mm (2.0 in) or more, may damage the frame.

Lubricate the drive chain with #80 – 90 gear oil or Pro Honda chain lube designed specifically for use with O-ring chains. Wipe off the excess oil or chain lubricant.

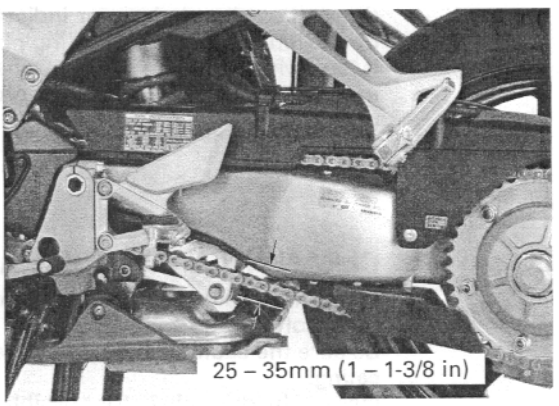

ADJUSTMENT

Loosen the rear axle bearing holder pinch bolt.

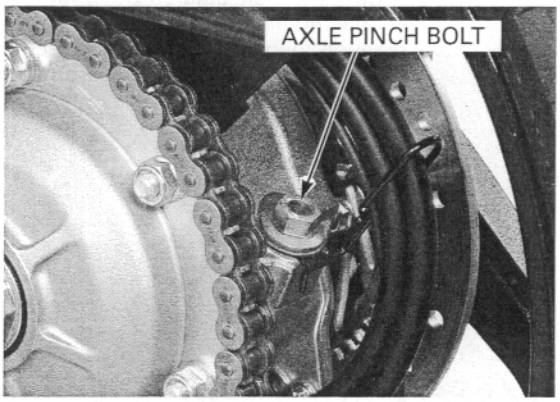

Turn the axle bearing holder using the equipped tool until the correct drive chain slack is obtained.
Tighten the rear axle bearing holder pinch bolt to the specified torque.

TORQUE: 74 N·m (7.5 kgf·m, 54 lbf·ft)

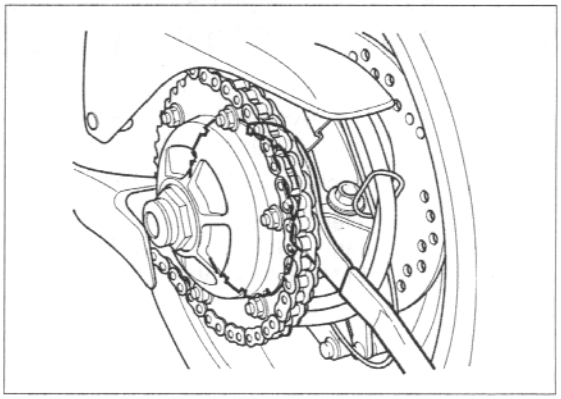

Recheck the drive chain slack and free wheel rotation.
Lubricate the drive chain with #80 – 90 gear oil or Pro Honda chain lube designed specifically for use with O-ring chains. Wipe off the excess oil or chain lubricant.
Check the drive chain wear indicator label attached on the left drive chain adjusting plate.
If the swingarm index mark reaches red zone of the indicator label, replace the drive chain with a new one (page 3-22).

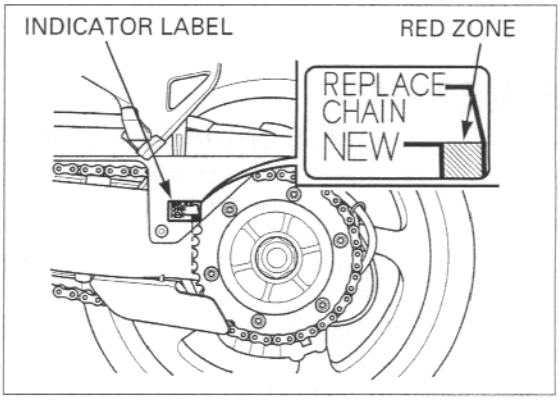

CLEANING AND LUBRICATION

Clean the chain with non-flammable or high flash point solvent and wipe it dry.
Be sure the chain has dried completely before lubricating.
Inspect the drive chain for possible damage or wear.
Replace any chain that has damaged rollers, loose fitting links, or otherwise appears unserviceable.
Installing a new chain on badly worn sprockets will cause the new chain to wear quickly.
Inspect and replace the sprockets as necessary.

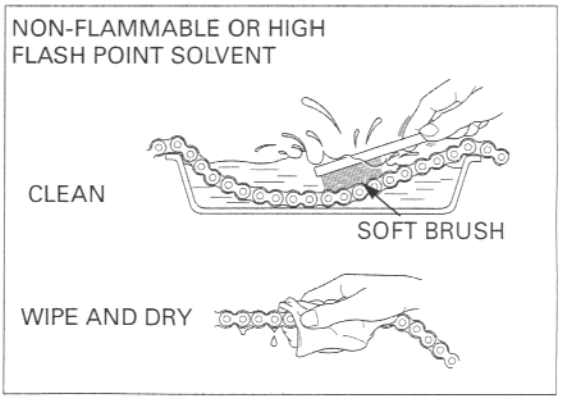

Lubricate the drive chain with #80 – 90 gear oil or Pro Honda chain lube designed specifically for use with O-ring chains. Wipe off the excess oil or chain lubricant.

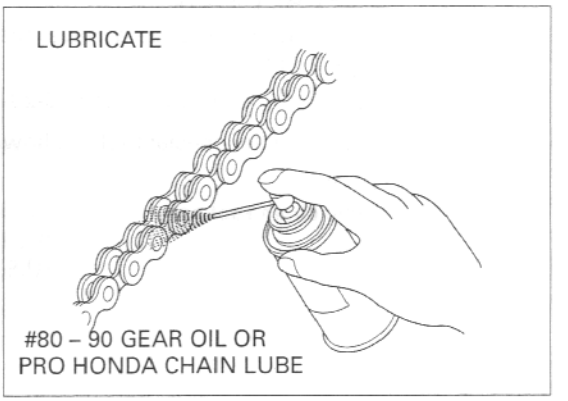

SPROCKETS INSPECTION

Inspect the drive and driven sprocket teeth for wear or damage, replace if necessary.
Never use a new drive chain on worn sprockets.
Both chain and sprockets must be in good condition, or the new replacement chain will wear rapidly.

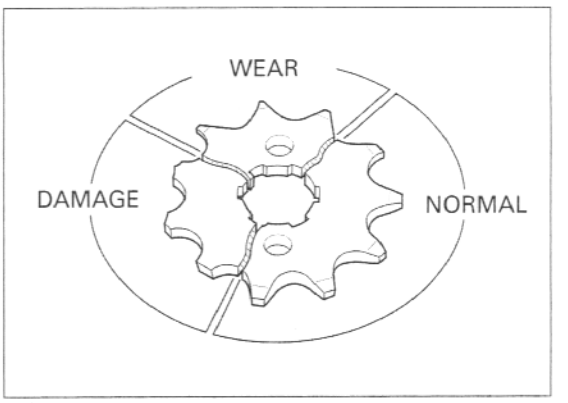

Check the attaching bolts and nuts on the drive and driven sprockets.
If any are loose, torque them.

TORQUE:
Drive sprocket bolt: 51 N·m (5.2 kg··m, 38 lbf·ft)
Driven sprocket nut: 64 N·m (6.5 kgf·m, 47 lbf·ft)

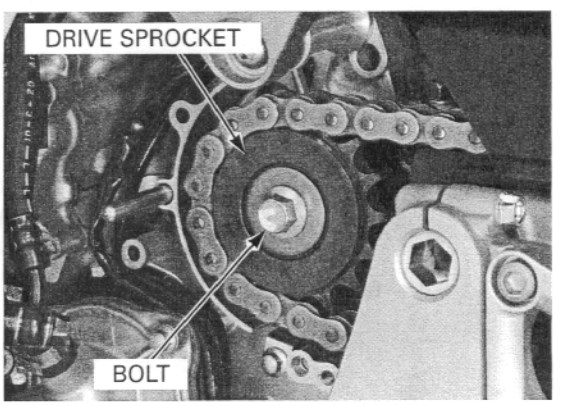

REPLACEMENT

This motorcycle uses a drive chain with a staked master link.

Loosen the drive chain (page 3-20).

When using the special tool, follow the manufacturer's instruction.

Assemble the special tool as shown.

TOOL:

Drive chain tool set	**07HMH-MR10103 or 07HMH-MR1010B (U.S.A. only)**

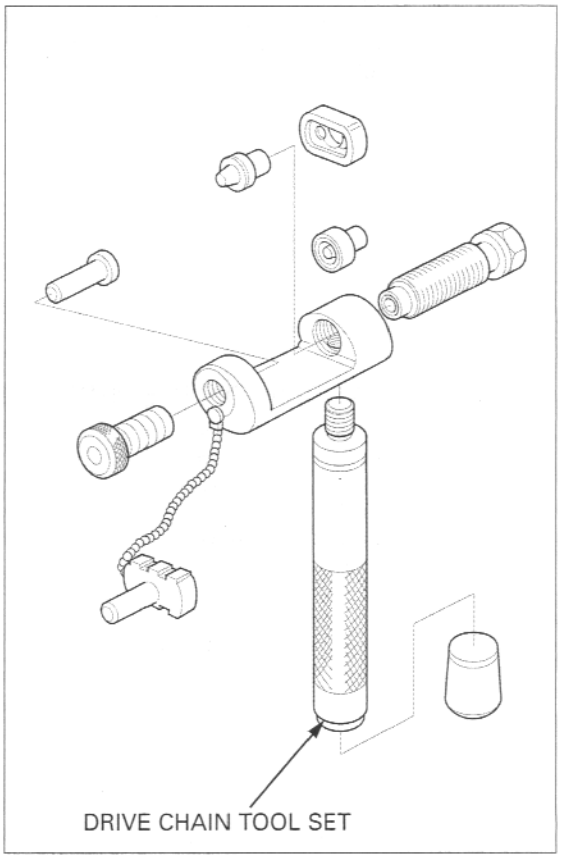

Locate the crimped pin ends of the master link from the outside of the chain, and remove the link with the drive chain tool set.

TOOL:

Drive chain tool set	**07HMH-MR10103 or 07HMH-MR1010B (U.S.A. only)**

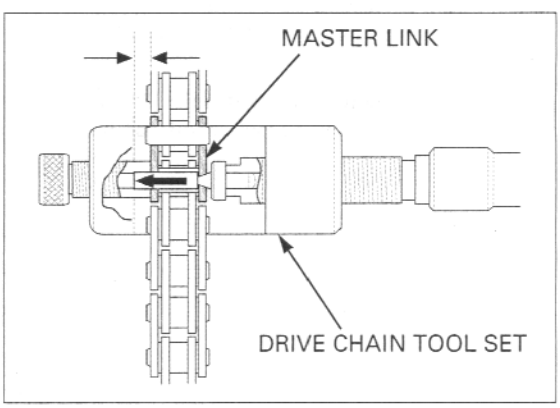

Remove the drive chain.

Include the master link when you count the drive chain links.

Remove the excess drive chain links from the new drive chain with the drive chain tool set.

STANDARD LINKS: 110 LINKS

REPLACEMENT CHAIN
DID: DID50VA8-110LE
RK: RK50HFOZ5-110LE

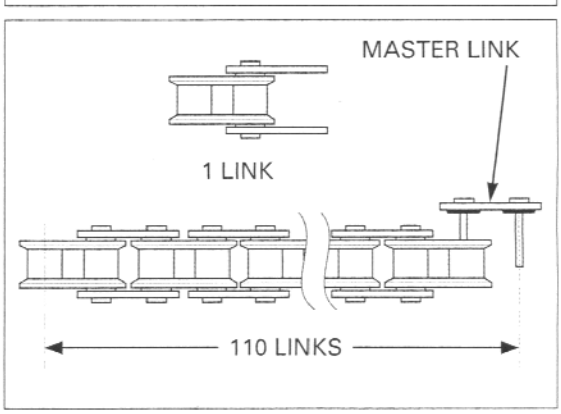

Insert the master link from the inside of the drive chain, and install the plate with the identification mark facing the outside.

Assemble the new master link, O-rings and plate.

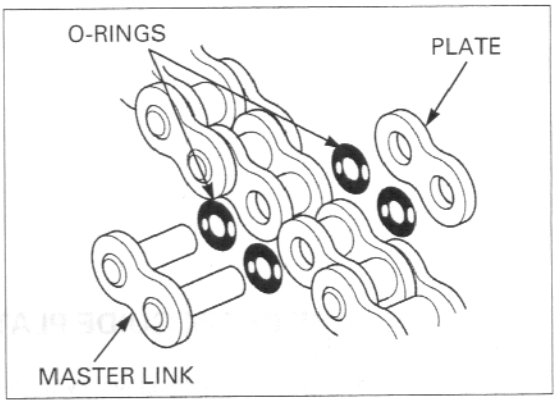

Never reuse the old drive chain, master link, master link plate and O-rings.

Assemble and set the drive chain tool set.

TOOL:

Drive chain tool set	**07HMH-MR10103 or 07HMH-MR1010B (U.S.A. only)**

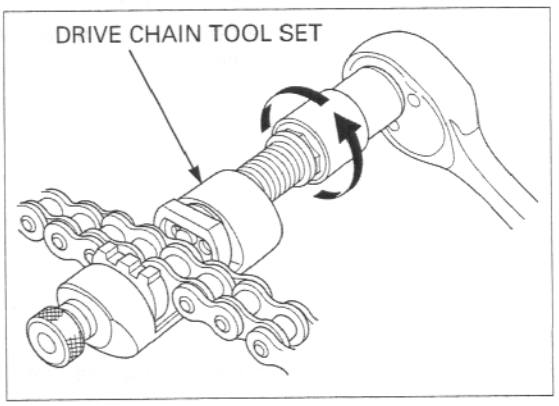

Make sure that the master link pins are installed properly.
Measure the master link pin length projected from the plate.

STANDARD LENGTH::
DID: 1.3 – 1.5 mm (0.05 – 0.06 in)
RK: 1.2 – 1.4 mm (0.05 – 0.06 in)

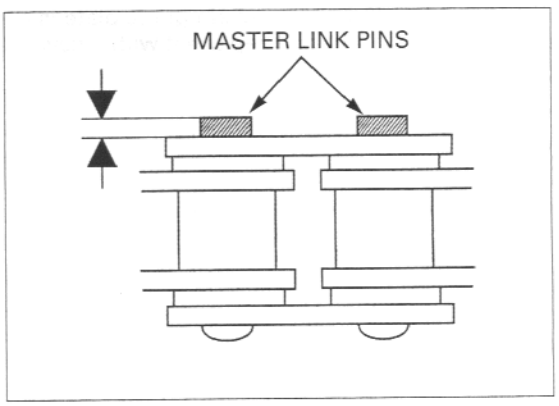

Stake the master link pins.

Make sure that the pins are staked properly by measuring the diameter of the staked area using a slide caliper.

DIAMETER OF THE STAKED AREA:
DID: 5.50 – 5.80 mm (0.217– 0.228 in)
RK: 5.50 – 5.95 mm (0.217 – 0.234 in)

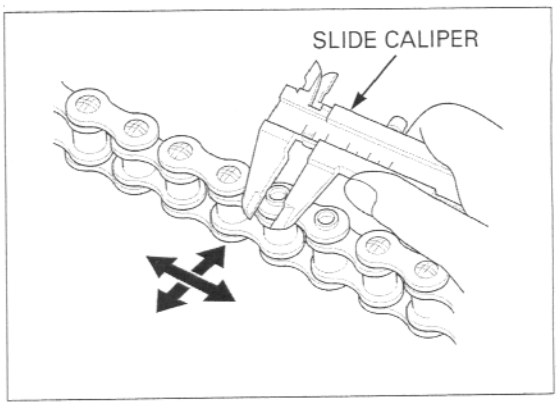

A drive chain with a clip-type master link must not be used.

After staking, check the staked area of the master link for cracks.
If there is any cracking, replace the master link, O-rings and plate.

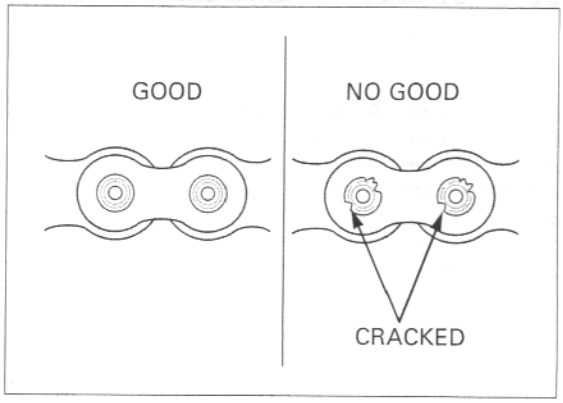

DRIVE CHAIN GUIDE PLATE INSPECTION

Remove the clutch slave cylinder without disconnecting the hose (page 9-11).

Remove the bolts, driven sprocket cover and drive chain guide plate.

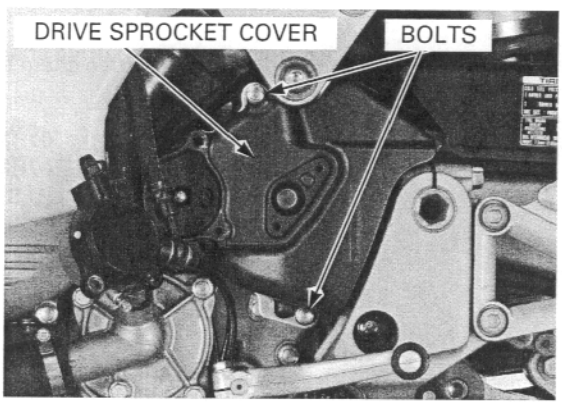

Avoid damaging the crankcase, periodically inspect the drive chain guide plate, replace if necessary.

Check the drive chain guide plate for wear or damage.
If the drive chain guide plate is excessively worn or damaged, replace it with a new one.

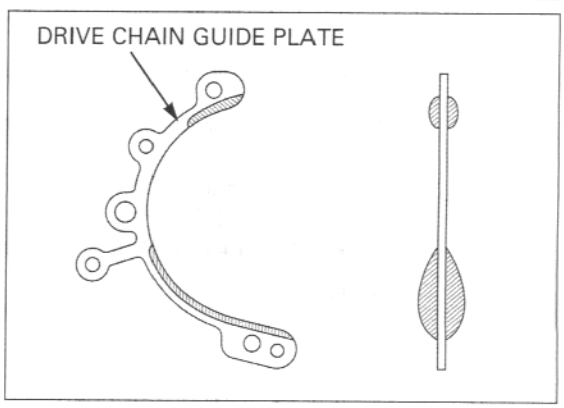

BRAKE FLUID

NOTICE

- *Do not mix different types of fluid, as they are not compatible with each other.*
- *Do not allow foreign material to enter the system when filling the reservoir.*
- *Avoid spilling fluid on painted, plastic or rubber parts. Place a shop towel over these parts whenever the system is serviced.*

When the fluid level is low, check the brake pads for wear (page 3-26). A low fluid level may be due to wear of the brake pads. If the brake pads are worn, the caliper piston is pushed out, and this accounts for a low reservoir level. If the brake pads are not worn and the fluid level is low, check entire system for leaks (page 3-26).

FRONT BRAKE

Turn the handlebar so that the reservoir is level and check the front brake fluid reservoir level.
If the level is near the lower level line, check the brake pad wear (page 3-26).

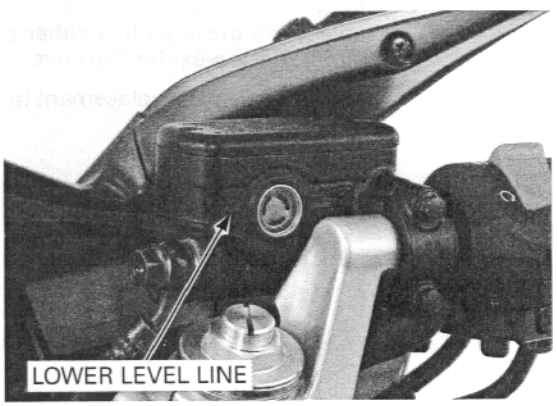

REAR BRAKE

Place the motorcycle on a level surface, and support it in an upright position.
Remove the seat (page 2-5).
Check the rear brake fluid reservoir level.
If the level is near the lower level line, check the brake pad wear (page 3-26).

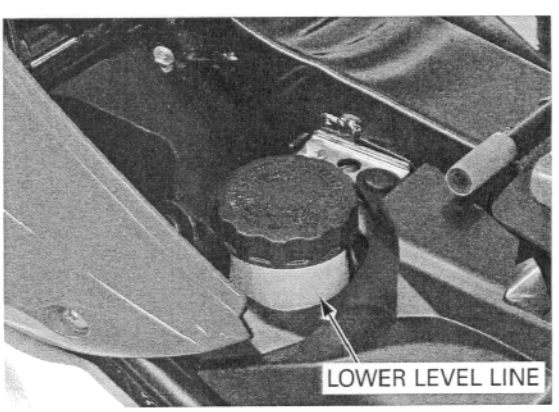

BRAKE PAD WEAR

FRONT BRAKE PADS

Check the brake pad for wear.
Replace the brake pads if either pad is worn to the bottom of the wear limit groove.

Refer to brake pad replacement (page 15-17).

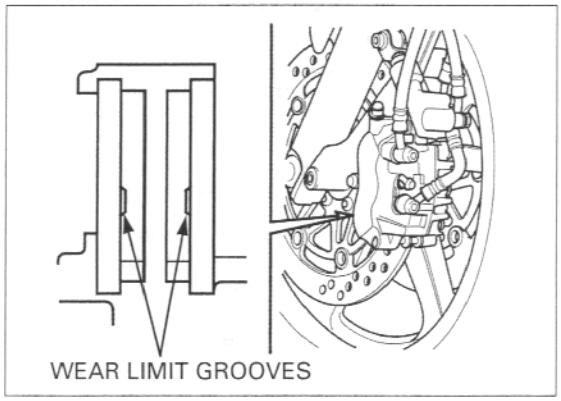

REAR BRAKE PADS

Check the brake pad for wear.
Replace the brake pads if either pad is worn to the bottom of the wear limit groove.

Refer to brake pad replacement (page 15-18).

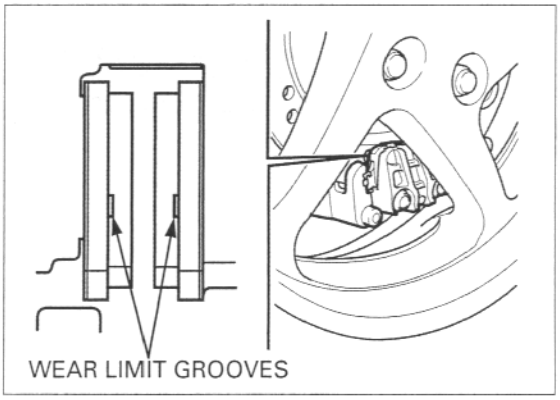

BRAKE SYSTEM

INSPECTION

This model is equipped with a Linked Brake System. Check the front and rear brake operation as follows: Place the motorcycle on its centerstand and shift the transmission into neutral.

Push the left front brake caliper upward by hand. Make sure the rear wheel does not turn while the left front brake caliper is pushed.

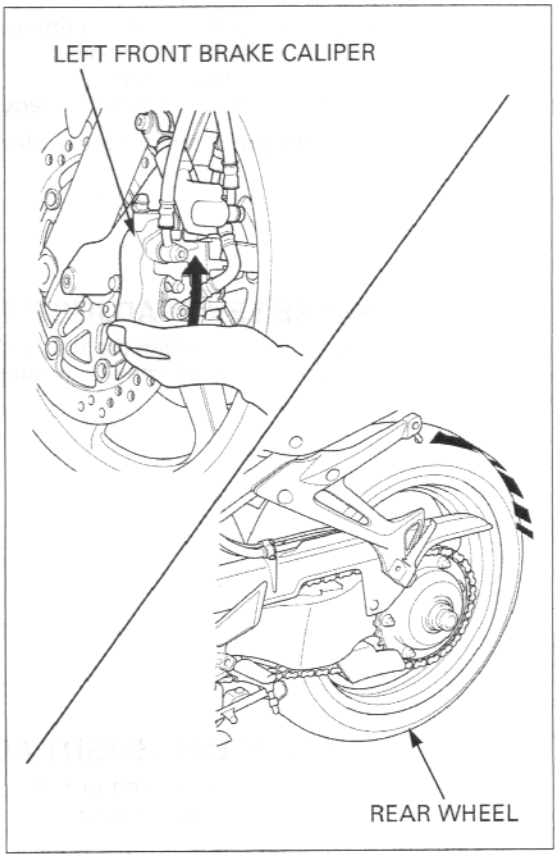

Do not use the oil filter as a jack point.

Jack-up the motorcycle to raise the front wheel off the ground.

Apply the rear brake pedal.
Make sure the front wheel does not turn while the rear brake pedal is applied.

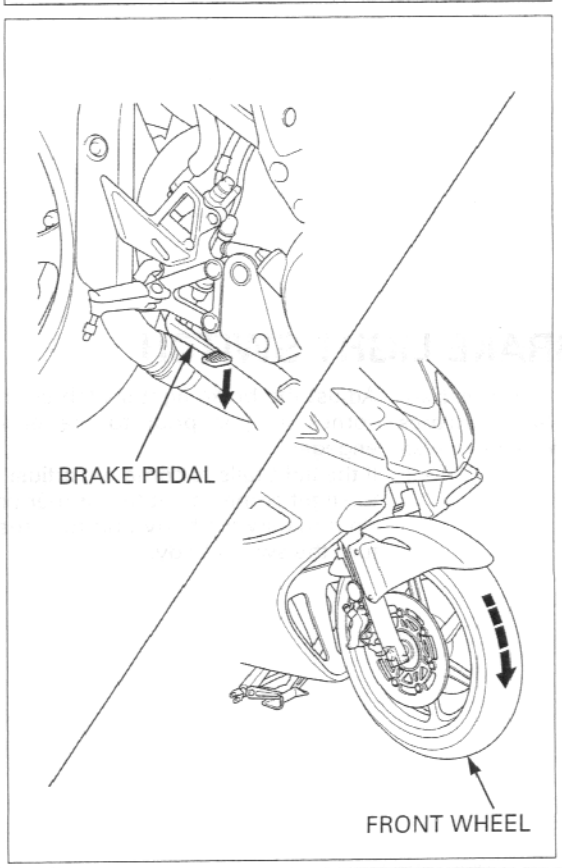

Firmly apply the brake lever or pedal, and check that no air has entered the system.
If the lever or pedal feels soft or spongy when operated, bleed the air from the system.

Inspect the brake hose and fittings for deterioration, cracks and signs of leakage.
Tighten any loose fittings.
Replace hoses and fittings as required.

Refer the procedure for brake bleeding (page 15-7).

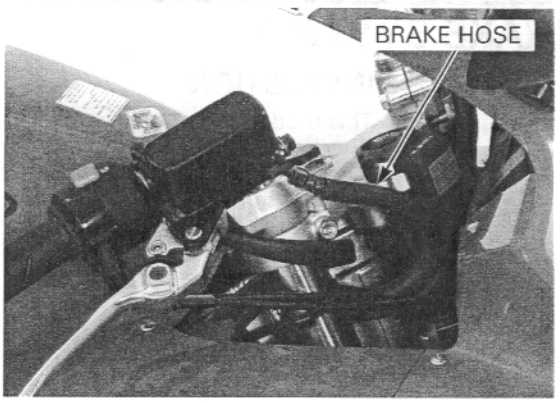

BRAKE LEVER ADJUSTMENT

Align the arrow on the brake lever with the index notch on the adjuster.

The distance between the top of the brake lever and the grip can be adjusted by turning the adjuster.

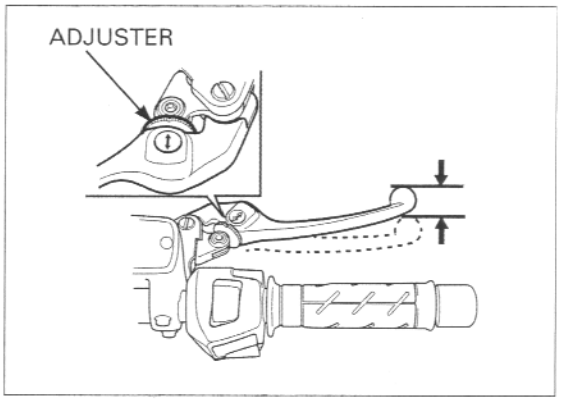

BRAKE PEDAL HEIGHT ADJUSTMENT

Loosen the lock nut and turn the push rod until the correct pedal height is obtained.

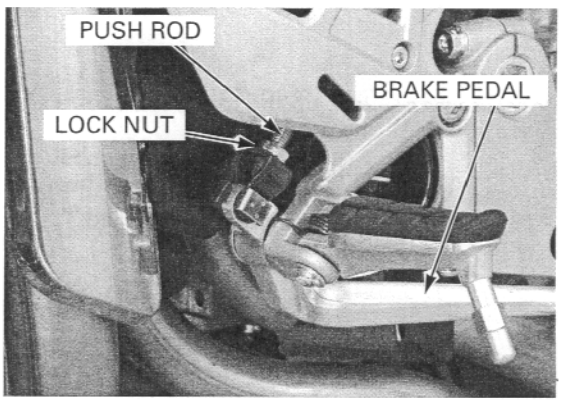

BRAKE LIGHT SWITCH

The front brake light switch does not require adjustment.

Adjust the brake light switch so that the brake light comes on just prior to the brake actually being engaged.
If the light fails to come on, adjust the switch so that the light comes on at the proper time.
Hold the switch body and turn the adjuster. Do not turn the switch body.

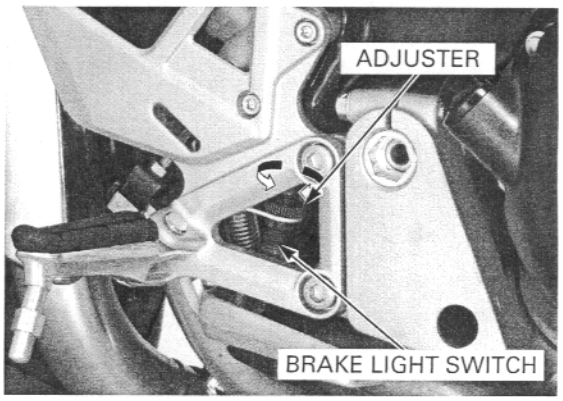

HEADLIGHT AIM

Remove the right and left meter panels (page 2-12).
Place the motorcycle on a level surface.

Adjust the headlight beam as specified by local laws and regulations.

Adjust the headlight beam vertically by turning the vertical beam adjusting screw.
A clockwise rotation moves the beam up and counterclockwise rotation moves the beam down.

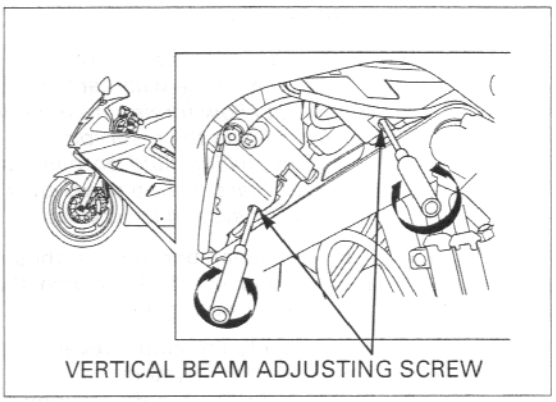

Adjust the headlight beam horizontally by turning the horizontal beam adjusting screw.
A clockwise rotation moves the beam toward the right side of the rider.

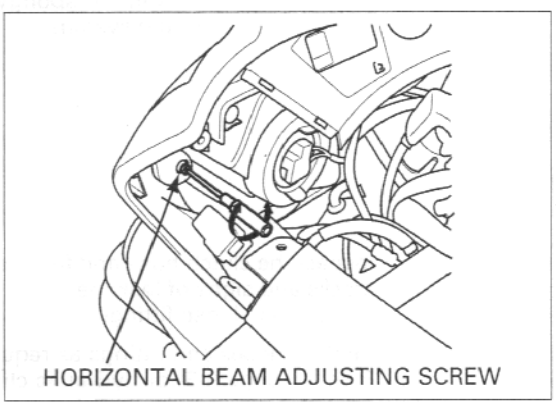

CLUTCH SYSTEM

CLUTCH LEVER ADJUSTMENT

Align the arrow on the brake lever with the index notch on the adjuster.

The distance between the top of the clutch lever and the grip can be adjusted by turning the adjuster.

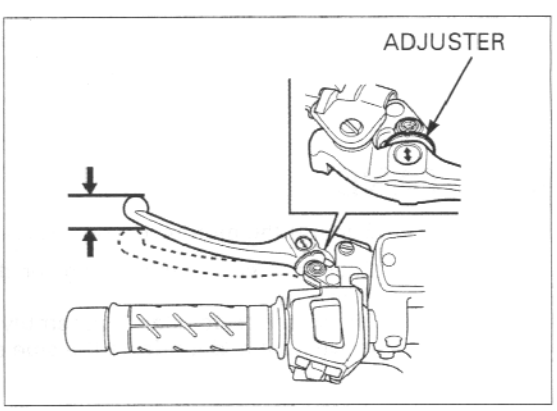

CLUTCH FLUID

NOTICE

- *Do not mix different types of fluid, as they are not compatible with each other.*
- *Do not allow foreign material to enter the system when filling the reservoir.*
- *Avoid spilling fluid on painted, plastic or rubber parts. Place a shop towel over these parts whenever the system is serviced.*

When the fluid level is low, check entire system for leaks.

Turn the handlebar to the right so that the reservoir is level and check the clutch fluid reservoir level through the sight glass.

Firmly apply the clutch lever, and check that no air has entered the system.
If the lever feels soft or spongy when operated, bleed the air from the system.

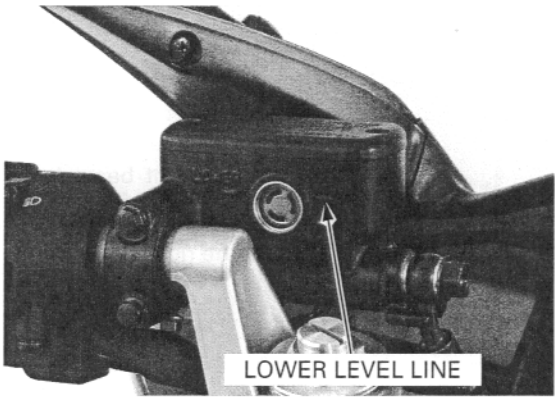

Inspect the clutch hose and fittings for deterioration, cracks and signs of leakage.
Tighten any loose fittings.

Replace hoses and fittings as required.
Refer to page 9-6 for hydraulic clutch bleeding procedures.

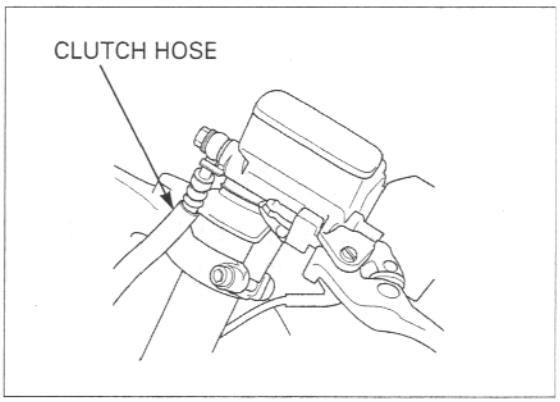

SIDE STAND

Support the motorcycle on a level surface.

Check the side stand spring for damage or loss of tension.
Check the side stand assembly for freedom of movement and lubricate the side stand pivot if necessary.

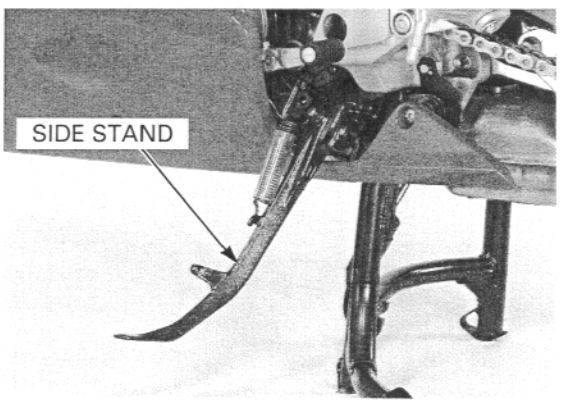

Check the side stand ignition cut-off system:

- Sit astride the motorcycle and raise the side stand.
- Start the engine with the transmission in neutral, then shift the transmission into gear, with the clutch lever squeezed.
- Move the side stand full down.
- The engine should stop as the side stand is lowered.

If there is a problem with the system, check the side stand switch (page 20-25).

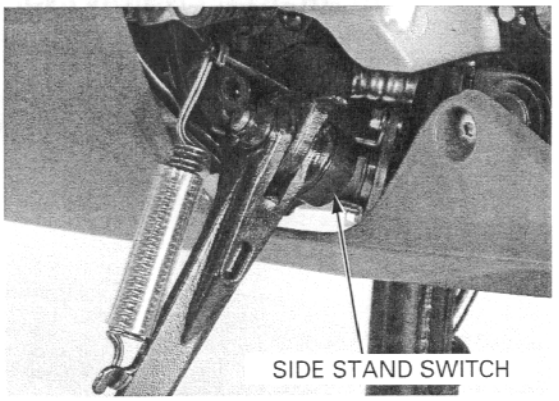

SUSPENSION

FRONT SUSPENSION INSPECTION

Check the action of the forks by operating the front brakes and compressing the front suspension several times.
Check the entire assembly for signs of leaks, damage or loose fasteners.

Loose, worn or damaged suspension parts impair motorcycles stability and control.

Replace damaged components which cannot be repaired.
Tighten all nuts and bolts.
Refer to the fork service (page 13-18).

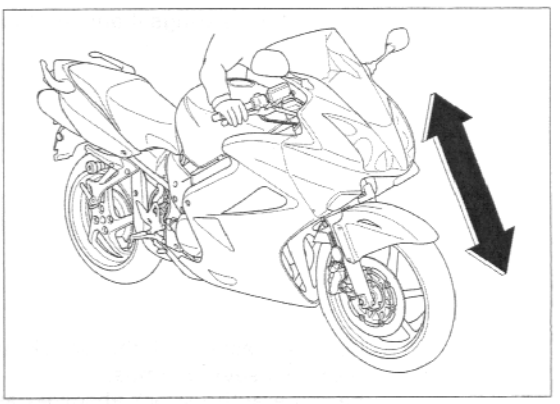

FRONT SUSPENSION ADJUSTMENT

SPRING PRE-LOAD ADJUSTER

Spring pre-load can be adjusted by turning the adjuster.

TURN CLOCKWISE:
Increase the spring pre-load
TURN COUNTERCLOCKWISE:
Decrease the spring pre-load

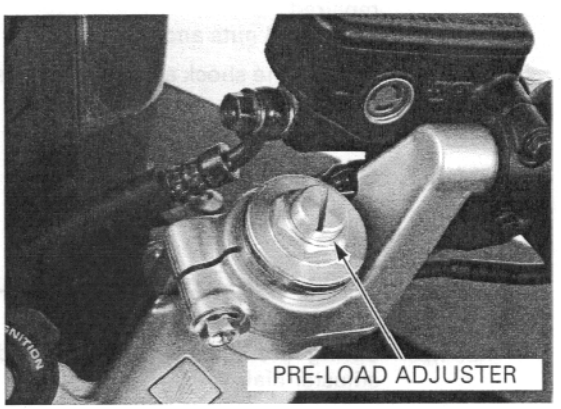

PRE-LOAD ADJUSTER ADJUSTABLE RANGE:
0 – 15 mm (0 – 0.6 in) from top of fork bolt
PRE-LOAD ADJUSTER STANDARD POSITION:
6 mm (0.2 in)/2nd groove from top of fork bolt

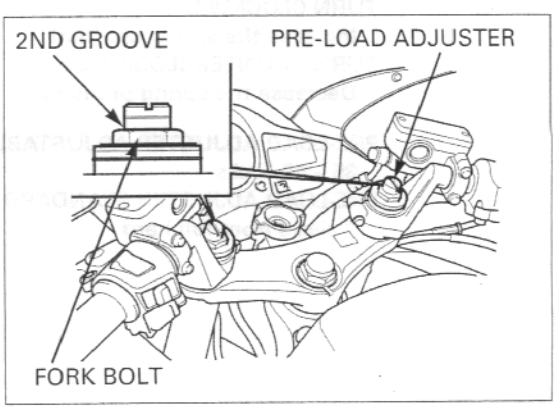

REAR SUSPENSION INSPECTION

Support the motorcycle securely and raise the rear wheel off the ground.

Hold the swingarm and move the rear wheel sideways with force to see if the axle bearings are worn.

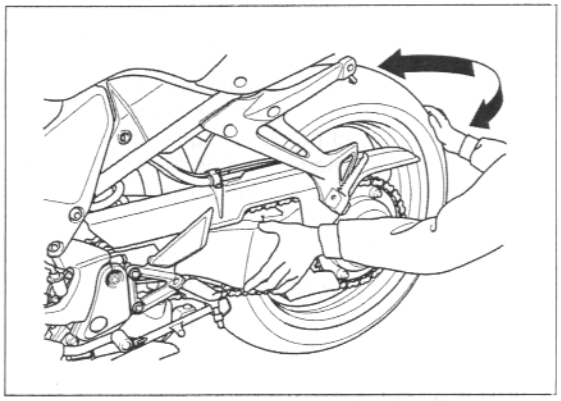

Check for worn swingarm bearings by grabbing the rear swingarm and attempting to move the swingarm side to side.
Replace the bearings if any are looseness is noted.

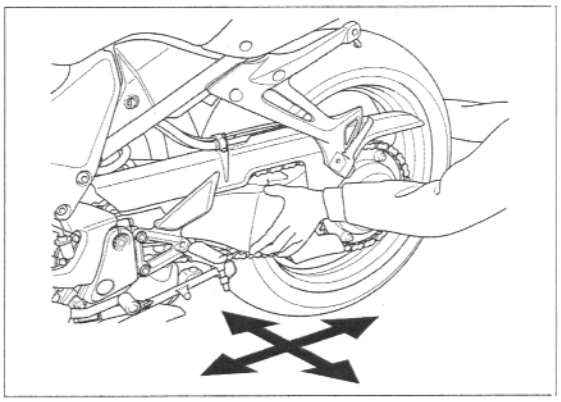

Check the action of the shock absorber by compressing it several times.
Check the entire shock absorber assembly for signs of leaks, damage or loose fasteners.
Replace damaged components which cannot be repaired.
Tighten all nuts and bolts.

Refer to the shock absorber service (page 14-26).

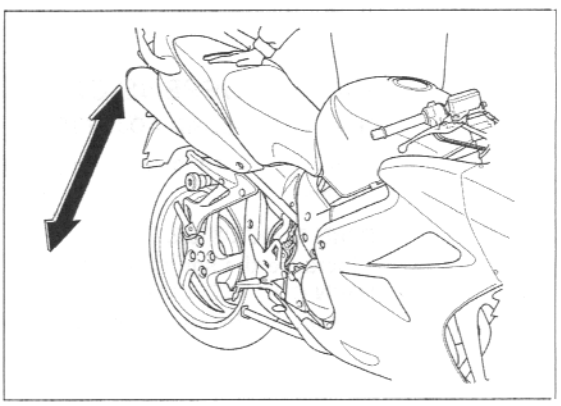

REAR SUSPENSION ADJUSTMENT

SPRING PRE-LOAD ADJUSTER

ABS type: Spring pre-load can be adjusted by turning the adjuster dial.

TURN CLOCKWISE:
Increase the spring pre-load
TURN COUNTERCLOCKWISE:
Decrease the spring pre-load

PRE-LOAD ADJUSTER ADJUSTABLE RANGE:
35 – 40 clicks
PRE-LOAD ADJUSTER STANDARD POSITION:
7 clicks from full hard

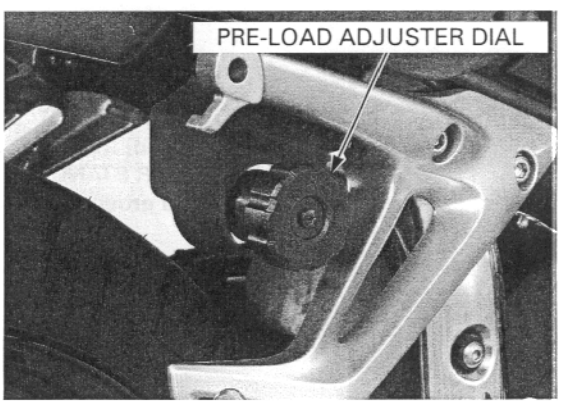

Standard type: Spring pre-load can be adjusted by turning the adjuster cam.

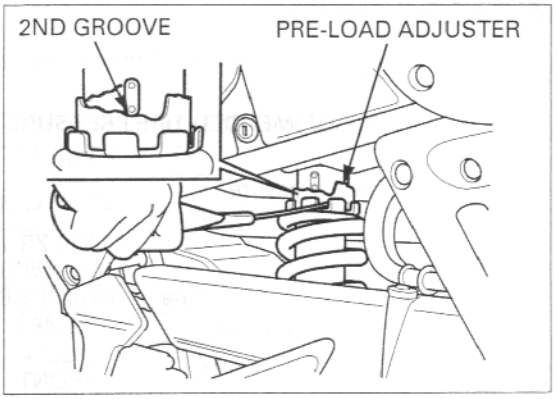

TURN CLOCKWISE:
Decrease the spring pre-load
TURN COUNTERCLOCKWISE:
Increase the spring pre-load

PRE-LOAD ADJUSTER STANDARD POSITION:
2nd groove

REBOUND DAMPING ADJUSTERS

NOTICE

- *Always start on full hard when adjusting the damping.*
- *Do not turn the adjuster screws more than the given positions or the adjusters may be damaged.*

The rebound damping can be adjusted by turning the adjusters.

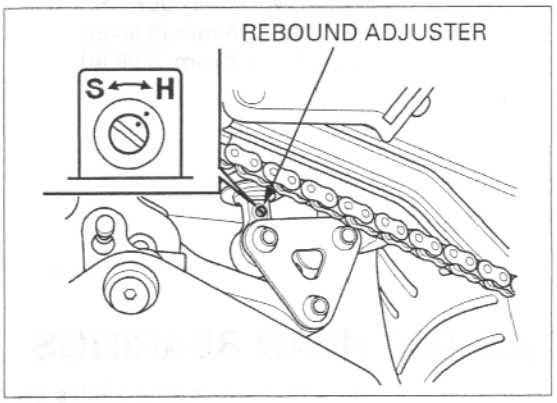

DIRECTION H: Increase the damping force
DIRECTION S: Decrease the damping force

Turn the rebound adjuster clockwise until it stops, then turn the adjuster counterclockwise.

REBOUND ADJUSTER STANDARD POSITION:
1 – 1/4 turns out from full hard

NUTS, BOLTS, FASTENERS

Check that all chassis nuts and bolts are tightened to their correct torque values (page 1-12).
Check that all safety clips, hose clamps and cable stays are in place and properly secured.

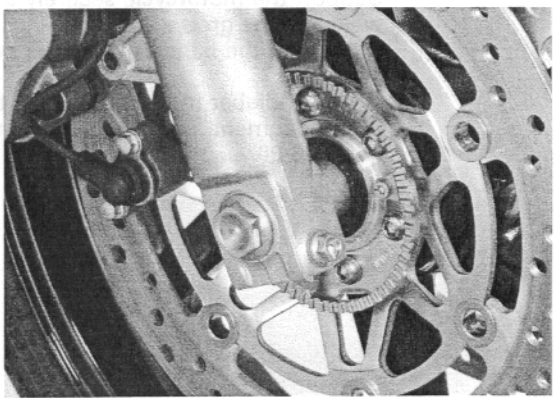

WHEELS/TIRES

Tire pressure should be checked when the tires are COLD.

RECOMMENDED TIRE PRESSURE AND TIRE SIZE:

		FRONT	REAR
Tire pressure kPa (kgf/cm², psi)		250 (2.50, 36)	290 (2.90, 42)
Tire size		120/70 ZR 17 M/C (58W)	180/55 ZR 17 M/C (73W)
Tire bland	Bridgestone	BT020F BB	BT020R BB
	Dunlop	D204FK	D204K
	Metzeler	MEZ4A FRONT	MEZ4A

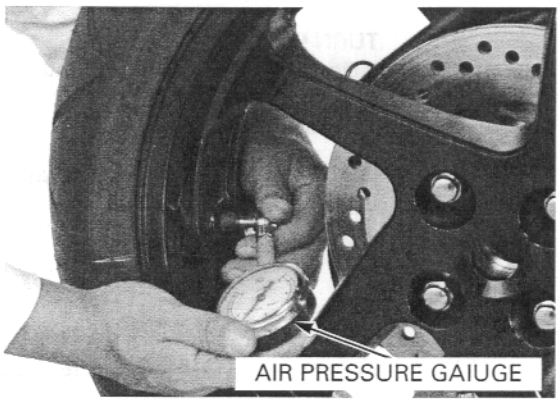

Check the tires for cuts, embedded nails, or other damage.
Check the front wheel (page 13-11) and rear wheel (page 14-5) for trueness.

Measure the tread depth at the center of the tires.
Replace the tires when the tread depth reaches the following limits.

MINIMUM TREAD DEPTH:
FRONT: 1.5 mm (0.06 in)
REAR: 2.0 mm (0.08 in)

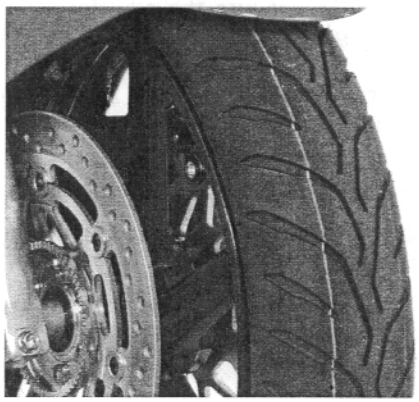

STEERING HEAD BEARINGS

Check that the control cables do not interfere with handlebar rotation.

Support the motorcycle securely and raise the front wheel off the ground.
Check that the handlebar moves freely from side to side.
If the handlebar moves unevenly, binds, or has vertical movement, inspect the steering head bearings (page 13-30).

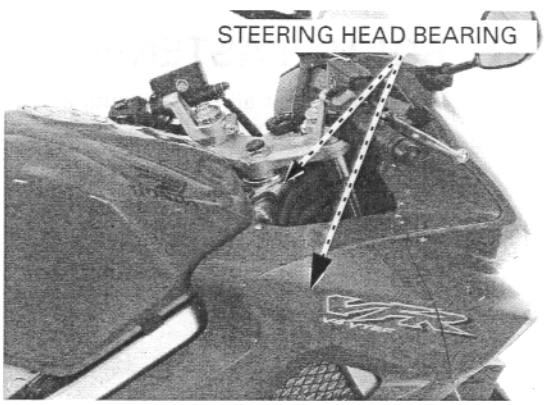

4. LUBRICATION SYSTEM

LUBRICATION SYSTEM DIAGRAM 4-2
SERVICE INFORMATION 4-3
TROUBLESHOOTING 4-4
OIL PRESSURE INSPECTION 4-5
OIL STRAINER/PRESSURE RELIEF VALVE ..4-6
OIL PUMP 4-8
OIL COOLER 4-14

LUBRICATION SYSTEM DIAGRAM

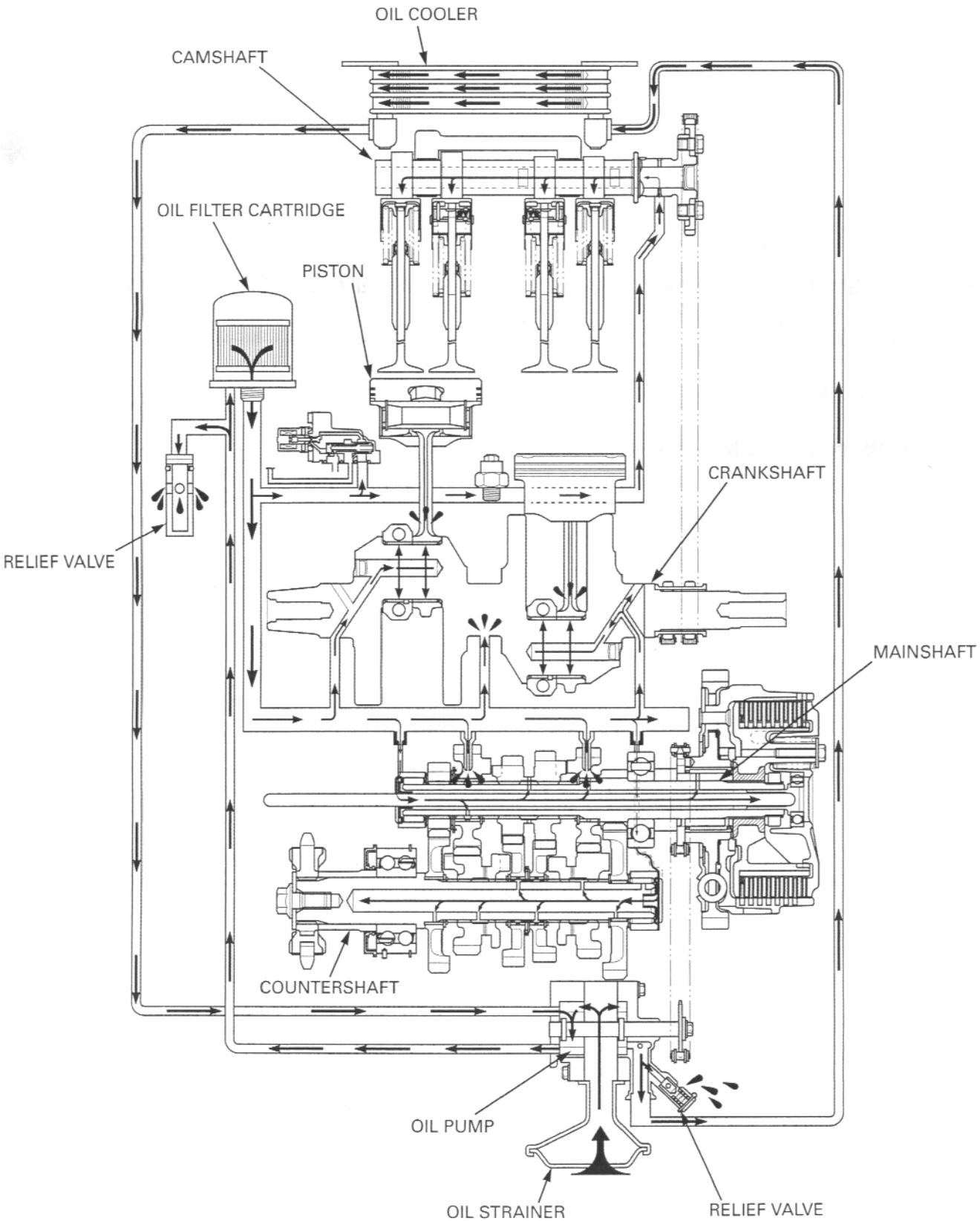

SERVICE INFORMATION

GENERAL

⚠CAUTION

Used engine oil may cause skin cancer if repeatedly left in contact with the skin for prolonged periods. Although this is unlikely unless you handle used oil on a daily basis, it is still advisable to thoroughly wash your hands with soap and water as soon as possible after handling used oil.

- The oil pump can be serviced with the engine installed in the frame.
- The service procedures in this section must be performed with the engine oil drained.
- When removing and installing the oil pump, use care not to allow dust or dirt to enter the engine.
- If any portion of the oil pump is worn beyond the specified service limits, replace the oil pump as an assembly.
- After the oil pump has been installed, check that there are no oil leaks and that oil pressure is correct.

SPECIFICATIONS

Unit: mm (in)

ITEM			STANDARD	SERVICE LIMIT
Engine oil capacity	After draining		2.9 liter (3.1 US qt, 2.6 Imp qt)	–
	After draining/filter change		3.1 liter (3.3 US qt, 2.7 Imp qt)	–
	After disassembly		3.8 liter (4.0 US qt, 3.3 Imp qt)	–
Recommended engine oil			HONDA GN4 or HP4 (Without Moly) 4-stroke oil (U.S.A. and Canada) or Honda 4-stroke oil (Canada only), or equivalent motor oil API service classification SF, SG or Higher JASO 4T service classification: MA Viscosity: SAE 10W-40	–
Oil pressure at oil pressure switch			490 kPa (5.0 kgf/cm², 71 psi) at 6,000 rpm/(80°C/176°F)	–
Oil pump rotor	Feed pump	Tip clearance	0.15 (0.006)	0.20 (0.008)
		Body clearance	0.15 – 0.21 (0.006 – 0.008)	0.35 (0.014)
		Side clearance	0.02 – 0.09 (0.001 – 0.004)	0.10 (0.004)
	Cooler pump	Tip clearance	0.15 (0.006)	0.20 (0.008)
		Body clearance	0.15 – 0.22 (0.006 – 0.009)	0.35 (0.014)
		Side clearance	0.020 – 0.075 (0.0008 – 0.0295)	0.10 (0.004)

TORQUE VALUES

Oil cooler boss	See page 1-15	
Oil pump assembly bolt	12 N·m (1.2 kgf·m, 9 lbf·ft)	CT bolt
Oil pump driven sprocket bolt/washer	18 N·m (1.8 kgf·m, 13 lbf·ft)	Apply a locking agent to the threads
Oil pressure switch	12 N·m (1.2 kgf·m, 9 lbf·ft)	Apply sealant to the threads
Engine oil filter cartridge	26 N·m (2.7 kgf·m, 20 lbf·ft)	Apply clean engine oil to the O-ring
Engine oil drain bolt	29 N·m (3.0 kgf·m, 22 lbf·ft)	

TOOLS

Oil pressure gauge set	07506-3000001	Equivalent commercially available in U.S.A.
Oil pressure gauge attachment	07406-0030001	Equivalent commercially available in U.S.A.
Gauge joint adaptor	07RMK-MW40100	Equivalent commercially available in U.S.A.
Oil filter wrench	07HAA-PJ70101	

TROUBLESHOOTING

Oil level too low
- Oil consumption
- External oil leak
- Worn piston rings
- Improperly installed piston rings
- Worn cylinders
- Worn stem seals
- Worn valve guide

Low oil pressure
- Oil level low
- Clogged oil strainer
- Internal oil leak
- Incorrect oil being used

No oil pressure
- Oil level too low
- Oil pressure relief valve stuck open
- Broken oil pump drive chain
- Broken oil pump drive or driven sprocket
- Damaged oil pump
- Internal oil leak

High oil pressure
- Oil pressure relief valve stuck closed
- Clogged oil filter, gallery or metering orifice
- Incorrect oil being used

Oil contamination
- Oil or filter not changed often enough
- Worn piston rings

Oil emulsification
- Blown cylinder head gasket
- Leaky coolant passage
- Entry of water

OIL PRESSURE INSPECTION

If the oil pressure indicator light remains on a few seconds, check the indicator system before checking the oil pressure.

Remove the side cowl (page 2-8).

Remove the oil filter cartridge using the special tool.

TOOL:
Oil filter wrench **07HAA-PJ70101**

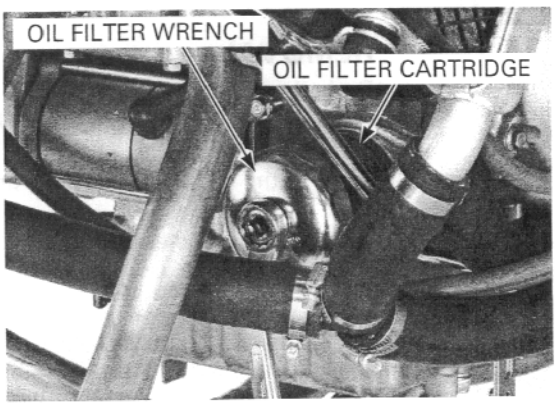

Apply oil to the oil pressure gauge joint attachment O-ring.

Install the oil pressure gauge joint attachment to the engine block, then tighten the nut.

TOOL:
Gauge joint attachment **07RMK-MW40100**

Reinstall the oil filter cartridge.

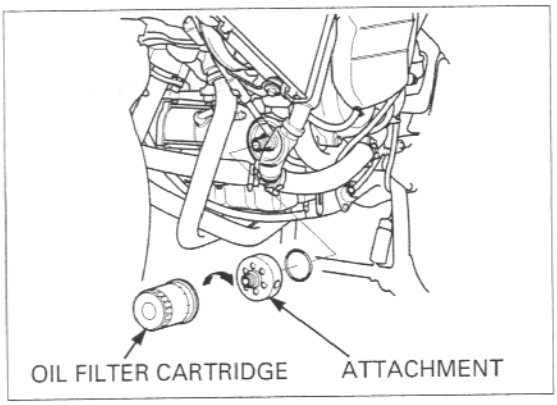

Install the oil pressure gauge attachment and oil pressure gauge to the gauge joint attachment.

TOOLS:
Oil pressure gauge **07506-300001**
Equivalent commercially available in U.S.A.
Oil pressure gauge attachment **07406-00300001**
Equivalent commercially available in U.S.A.

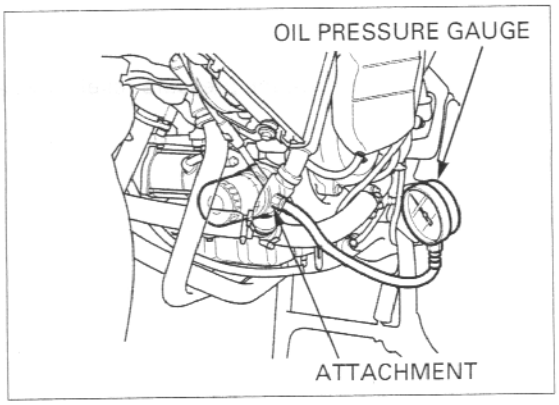

Check the oil level.

Warm up the engine to normal operating temperature (approximately 80°C/176°F) and increase the rpm to 6,000 min^{-1} (rpm) and read the oil pressure.

OIL PRESSURE:
490 kPa (5.0 kgf/cm^2, 71 psi) at 6,000 rpm/ (80°C/176°F)

OIL STRAINER/PRESSURE RELIEF VALVE

REMOVAL

Drain the engine oil (page 3-15).
Remove the oil cooler hose joint (page 4-14).
Remove the exhaust pipe (page 2-29).

Remove the oil pan flange bolts and oil pan.

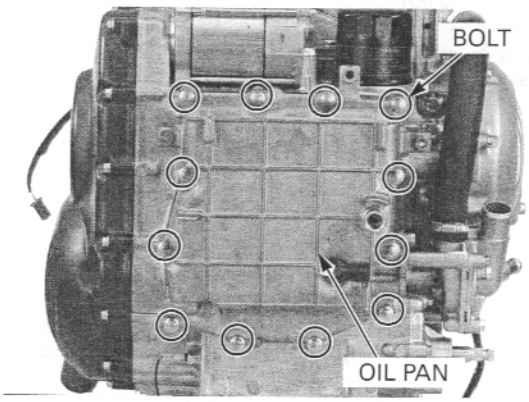

Remove the 15 mm dowel pins and O-rings.

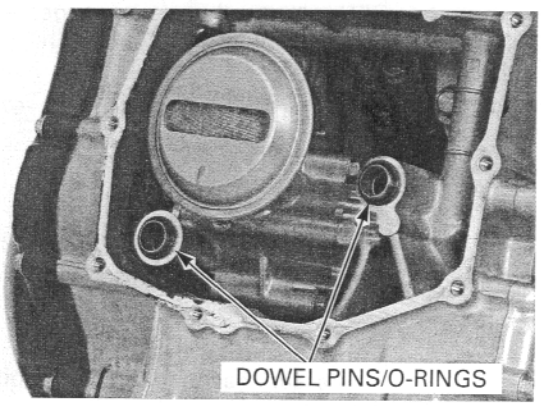

Remove the pressure relief valve and O-ring.

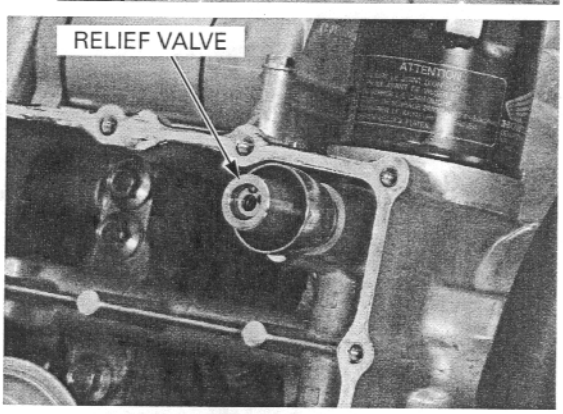

Remove the oil strainer and packing.

Clean the oil strainer screen.

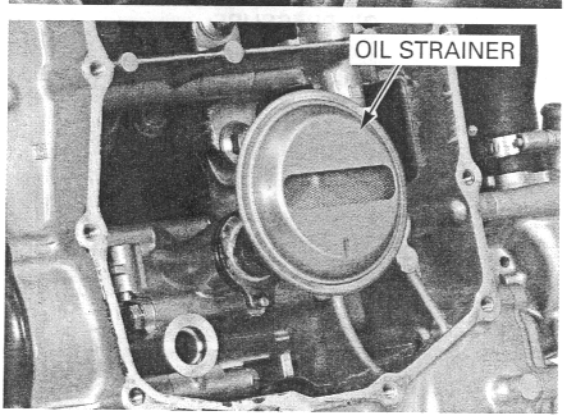

INSPECTION

Check the operation of the pressure relief valve by pushing on the piston.
Disassemble the relief valve by removing the snap ring.

Inspect the piston for wear, sticking or damage.
Inspect the spring for weakness or damage.

Assemble the relief valve in the reverse order of disassembly.

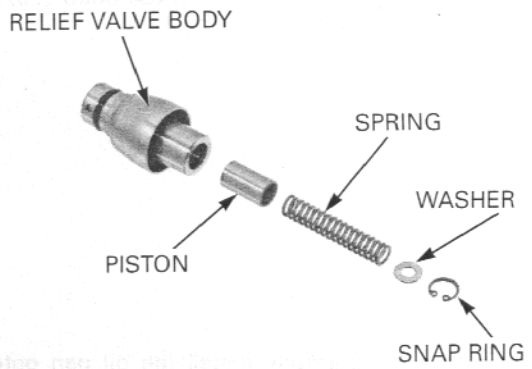

INSTALLATION

Apply oil to the new packing and install it onto the oil strainer.

Install the oil strainer into the crankcase while aligning its grooves with the boss on the oil pump body.

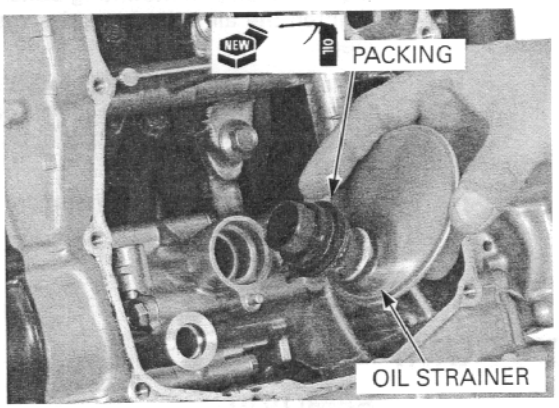

Apply oil to the new O-ring and install it onto the relief valve.
Install the relief valve into the crankcase.

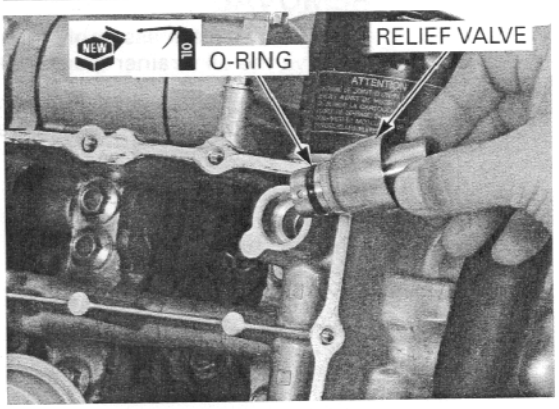

Install the 15 mm dowel pins and new O-rings.

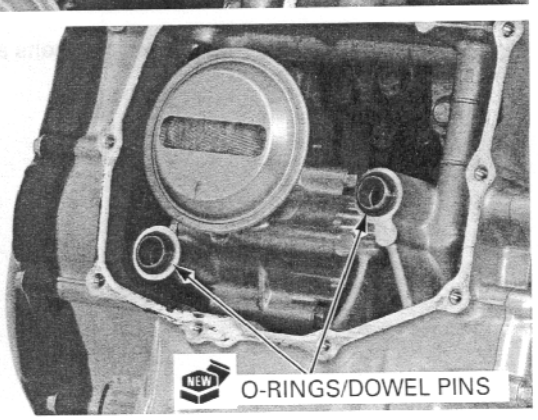

Clean the oil pan mating surface thoroughly.

Do not apply sealant more than necessary.

Apply sealant (Three Bond 1207B or an equivalent) to the mating surface.

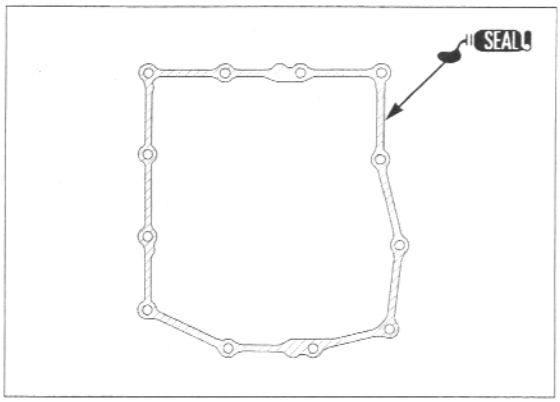

Carefully install the oil pan onto the lower crankcase.
Install the oil pan mounting bolts.
Tighten the all bolts in a crisscross pattern in 2 – 3 steps.

Install the exhaust pipe (page 2-30).
Install the oil cooler hose joints (page 4-16).
Fill the crankcase with recommended oil (page 3-14).

After installation, check that there are no oil leaks.

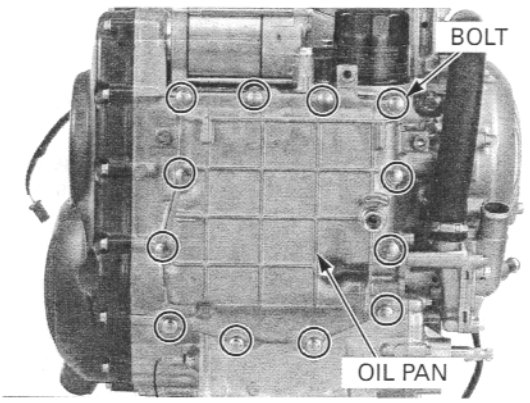

OIL PUMP

REMOVAL

Remove the clutch assembly (page 9-15).
Remove the oil strainer (page 4-6).

Remove the bolt/washer, then remove the oil pump drive/driven sprocket, clutch outer guide and drive chain as an assembly.

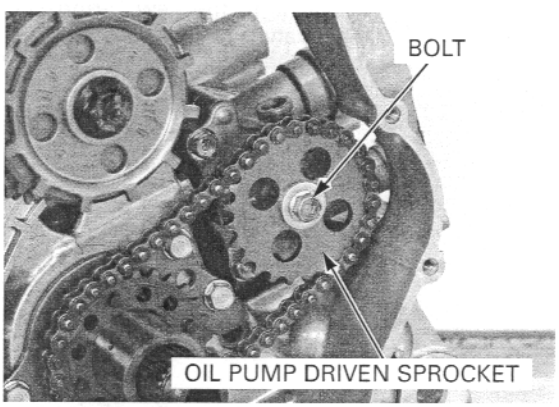

Remove the three flange bolts and oil pump assembly.

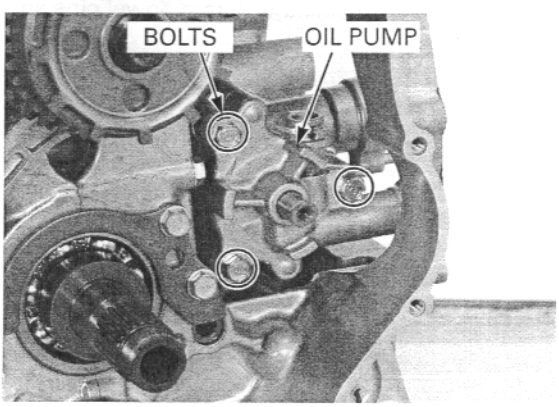

Remove the dowel pins.

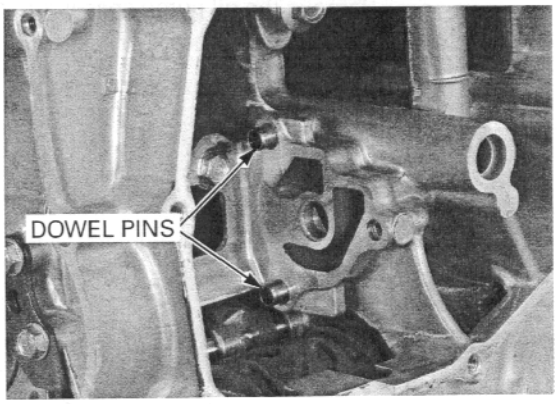

DISASSEMBLY

Straighten and remove the cotter pin.
Remove the spring seat, spring and pressure relief valve.

Check the pressure relief valve for wear or damage.

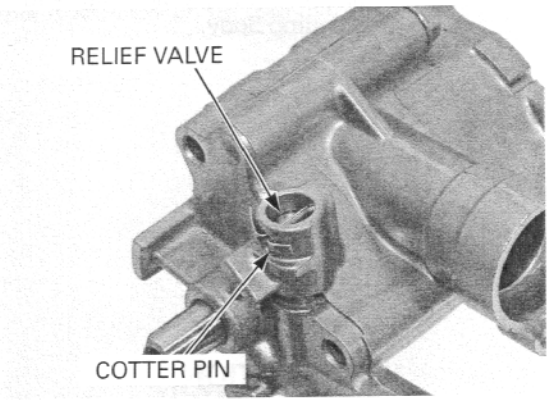

Remove the oil pump assembly bolts.

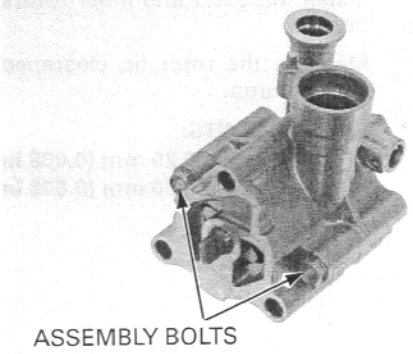

Remove the oil pump cover and dowel pins.

Remove the cooler pump outer rotor and inner rotor.
Remove the drive pin.

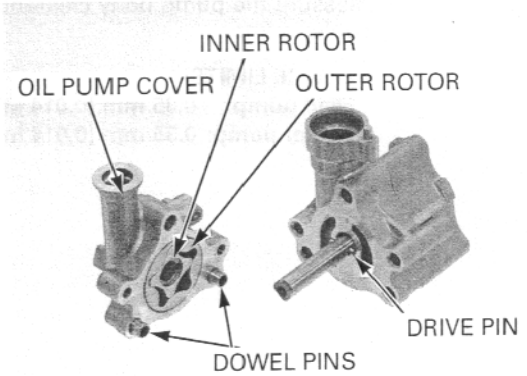

Remove the oil pump spacer and dowel pins.

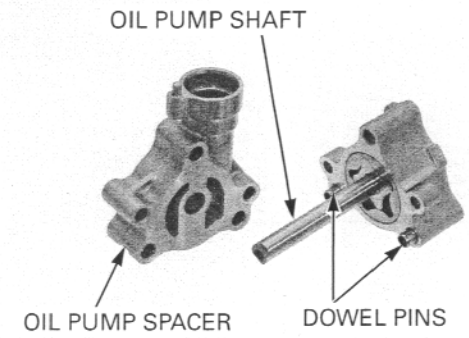

Remove the oil pump shaft, thrust washer, drive pin, feed pump outer rotor and inner rotor from the oil pump body.

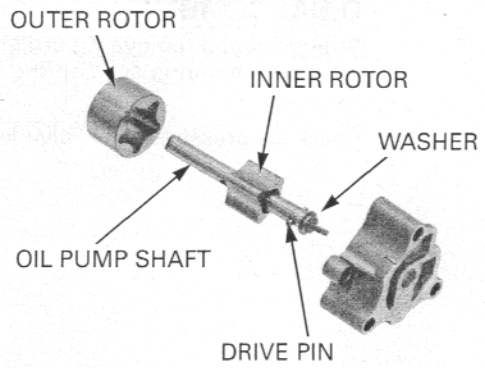

INSPECTION

If any portion of the oil pump is worn beyond the service limit, replace the oil pump as an assembly.

Temporarily install the oil pump shaft.
Install the outer and inner rotors into the oil pump body.

Measure the rotor tip clearance for the feed and cooler pump.

SERVICE LIMITS:
Feed pump: 0.20 mm (0.008 in)
Cooler pump: 0.20 mm (0.008 in)

TIP CLEARANCE:

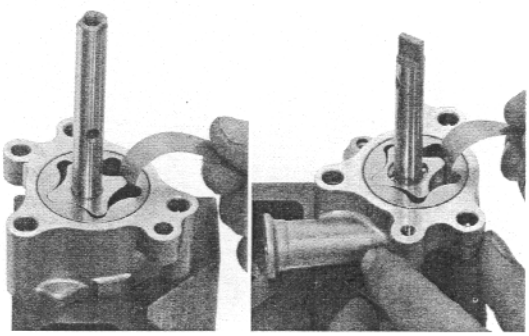

Measure the pump body clearance for the feed and cooler pump.

SERVICE LIMITS:
Feed pump: 0.35 mm (0.014 in)
Cooler pump: 0.35 mm (0.014 in)

BODY CLEARANCE:

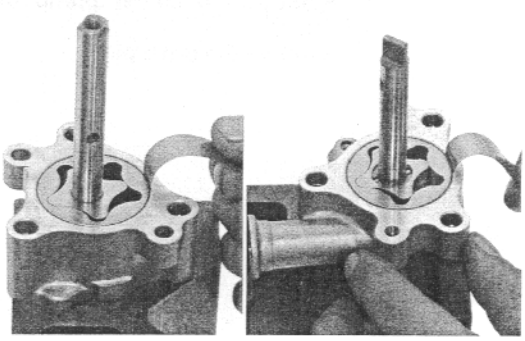

Measure the side clearance for the feed and cooler pump using a straight edge and feeler gauge.

SERVICE LIMITS:
Feed pump: 0.10 mm (0.004 in)
Cooler pump: 0.10 mm (0.004 in)

SIDE CLEARANCE:

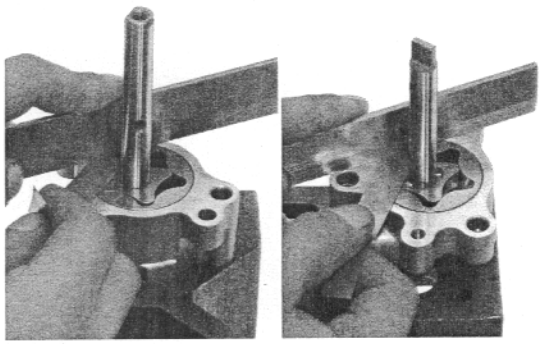

ASSEMBLY

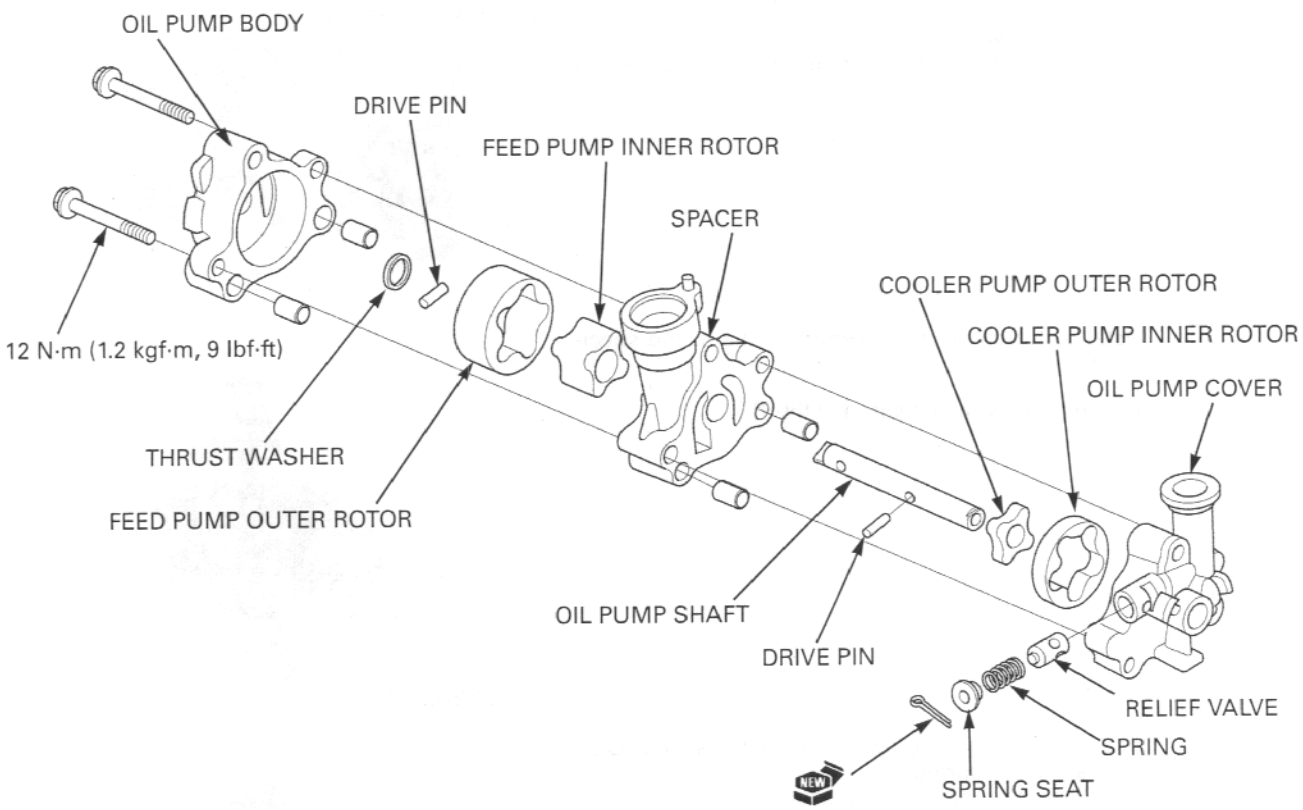

Install the feed pump outer and inner rotors onto the oil pump shaft.
Install the drive pin into the hole in the pump shaft and align the pin with the groove in the inner rotor as shown
Install the thrust washer onto the shaft.
Install the oil pump shaft through the oil pump body.

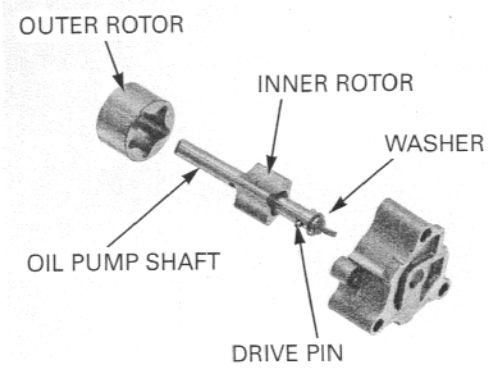

Install the dowel pins and oil pump spacer.

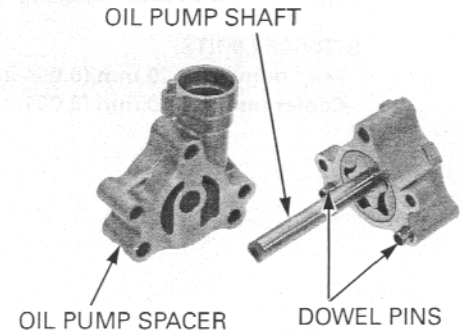

Install the drive pin into the hole in the pump shaft.

Install the cooler pump outer and inner rotor into the oil pump cover.

Install the dowel pins.
Install the oil pump cover assembly onto the oil pump body.

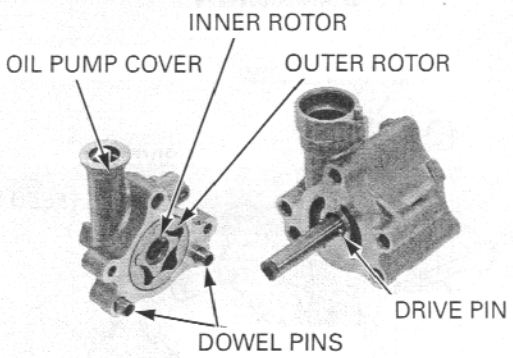

Install and tighten the assembly bolts to the specified torque.

TORQUE: 12 N·m (1.2 kgf·m, 9 lbf·ft)

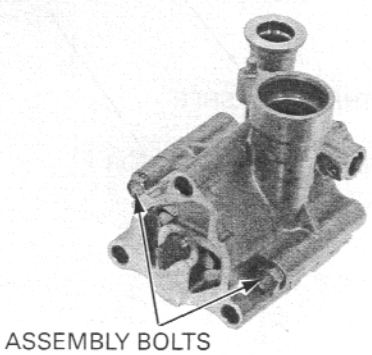

Install the oil pressure relief valve with its small O.D. side facing the spring.
Install the spring and spring seat.

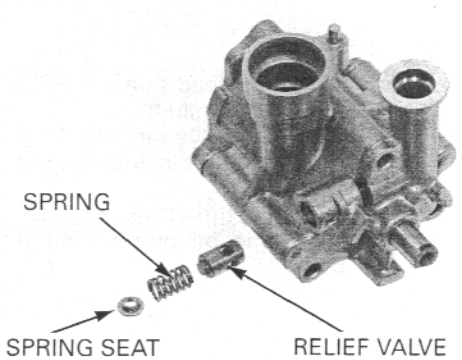

Hold the spring seat and install a new cotter pin. Bend the cotter pin securely as indicated in the illustration.

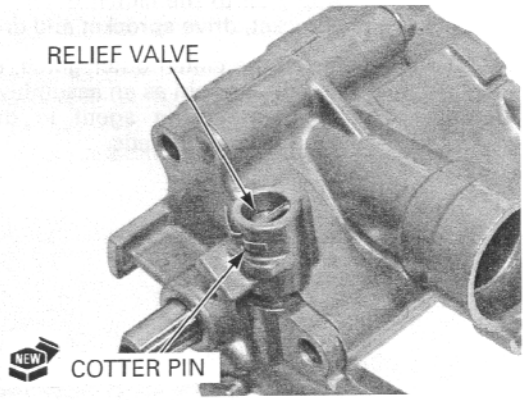

INSTALLATION

Install the dowel pins into the crankcase.

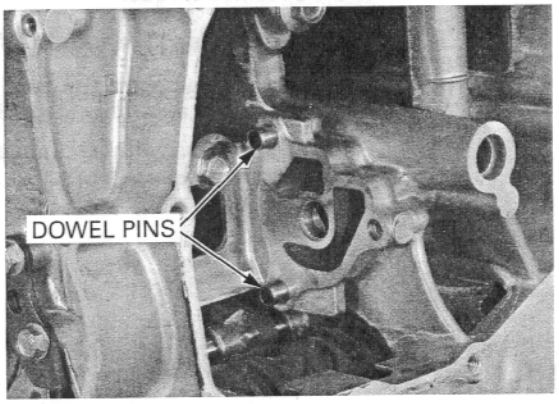

Install the oil pump into the crankcase while aligning the pump shaft lug with the water pump shaft groove.

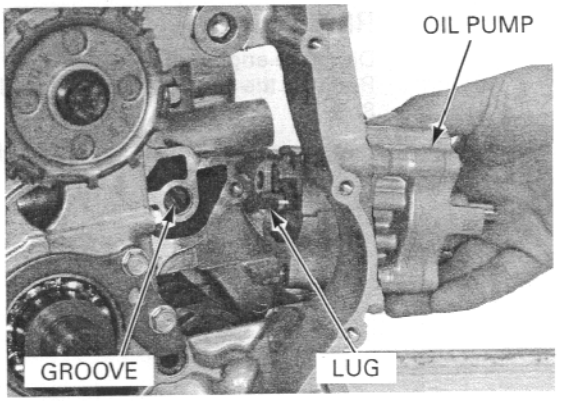

Install and tighten the three flange bolts securely.

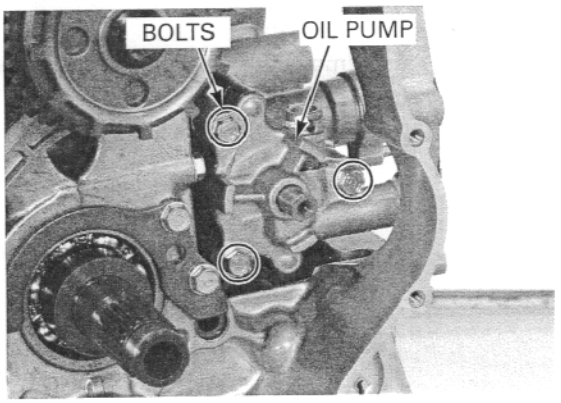

Apply oil to the clutch outer guide, oil pump drive sprocket, drive sprocket and drive chain.

Install the clutch outer guide, drive/driven sprocket and drive chain as an assembly.
Apply a locking agent to the oil pump driven sprocket bolt threads.

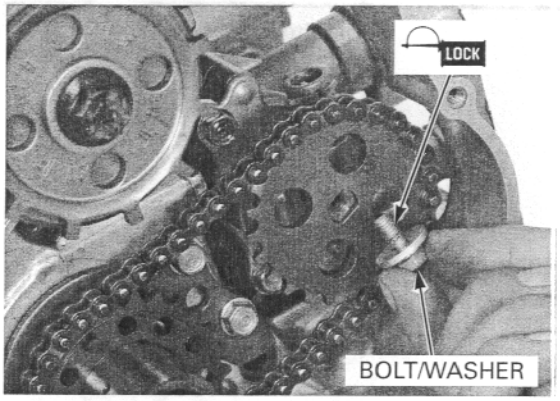

Install and tighten the driven sprocket bolt/washer to the specified torque.

TORQUE: 18 N·m (1.8 kgf·m, 13 lbf·ft)

Install the oil strainer and oil pan (page 4-7).
Install the clutch assembly (page 9-11).

Fill the crankcase with recommended engine oil, and check for oil leaks (page 3-14).
Check the oil pressure (page 4-5).

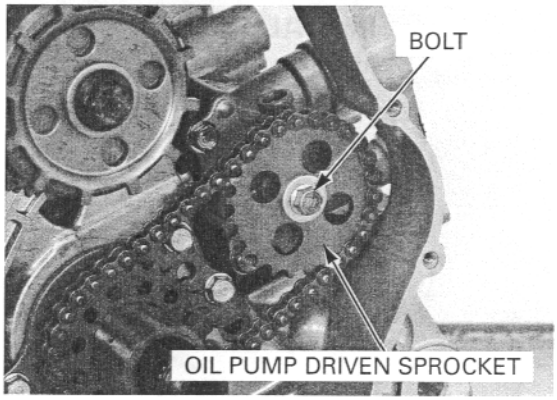

OIL COOLER

REMOVAL

Drain the engine oil (page 3-15).
Remove the side cowl and inner half cowl (page 2-8).

Remove the oil cooler pipe joint SH bolts.

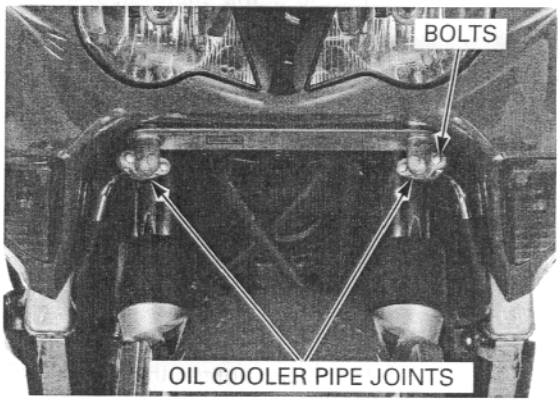

Remove the oil cooler hose bolt and oil cooler hose joint on each side.

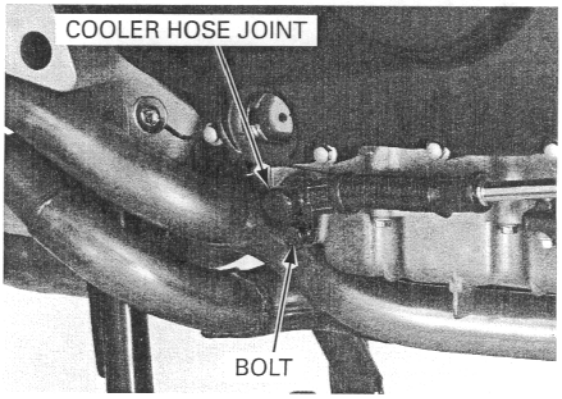

Remove the SH bolt and oil cooler pipe stay on each side.

Remove the oil cooler pipes and O-rings.

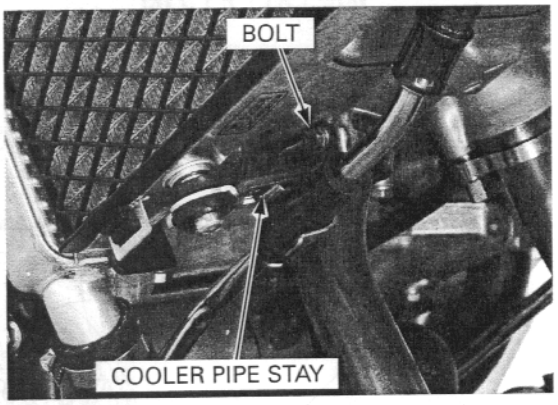

Remove the bolts and oil cooler.

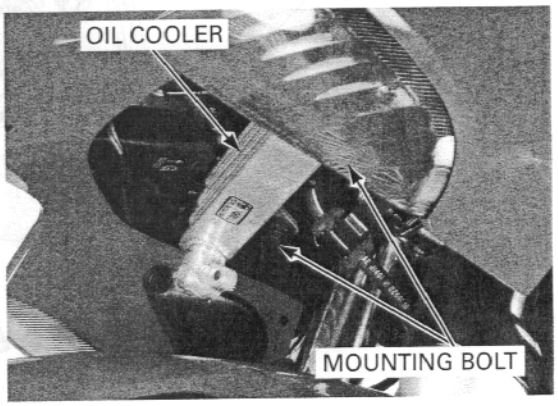

INSPECTION

Check the oil cooler air passage for clogging or damage.

Straighten bent fins with a small, flat blade screwdriver and remove insects, mud or other obstructions with compressed air.

Check for any oil leakage from the oil cooler and hose.

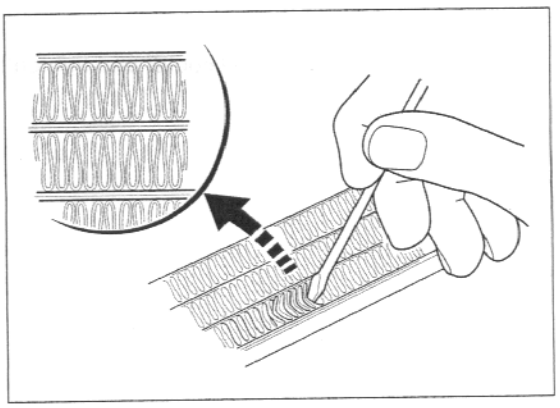

INSTALLATION

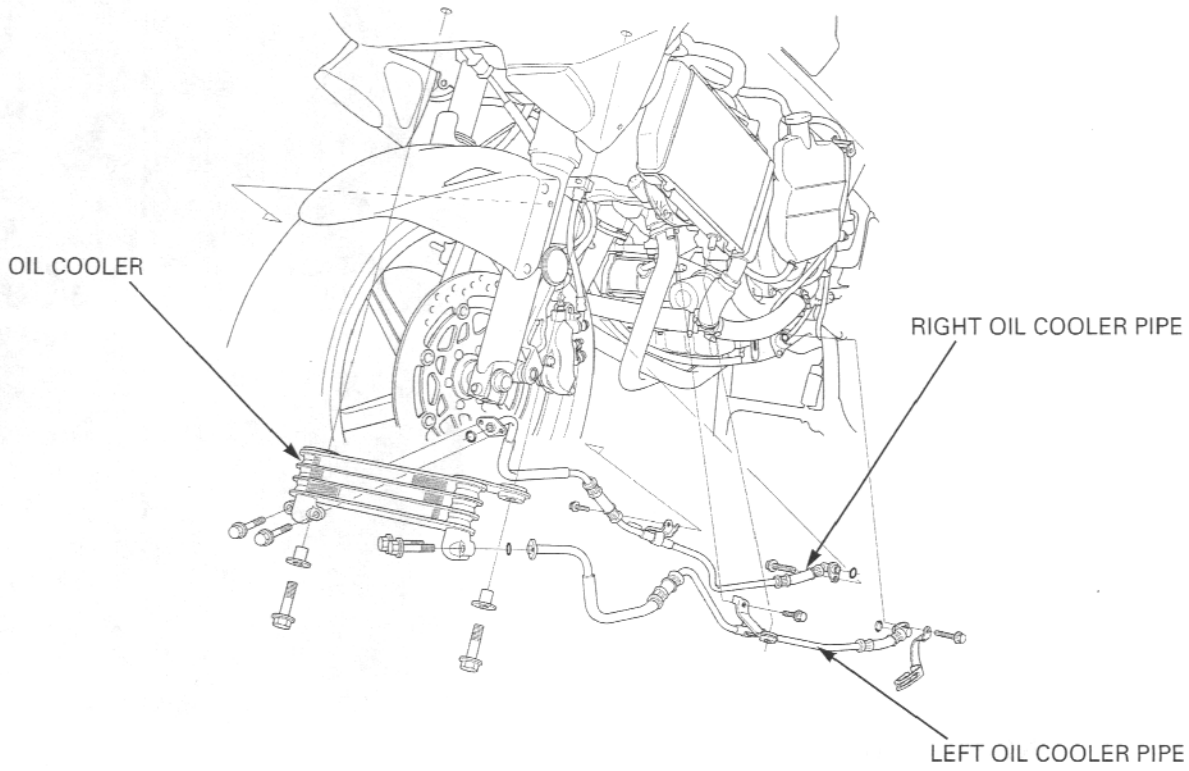

Install the oil cooler and tighten the bolts securely.

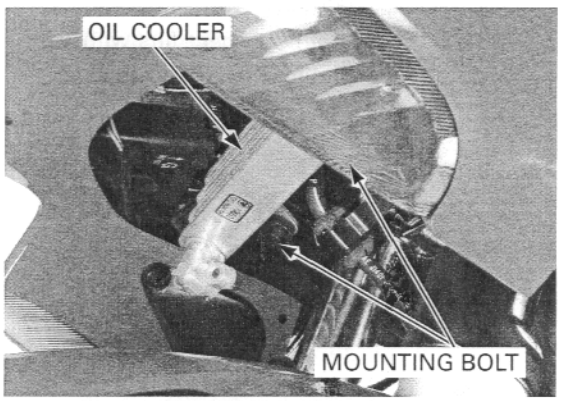

Install the oil cooler hoses.

Coat new O-ring with engine oil and install them onto the oil cooler hose joint.

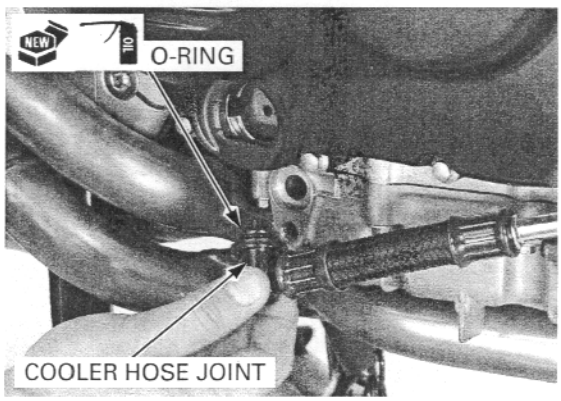

Install the oil cooler hose joints to the each side of the crankcase and tighten the bolts.

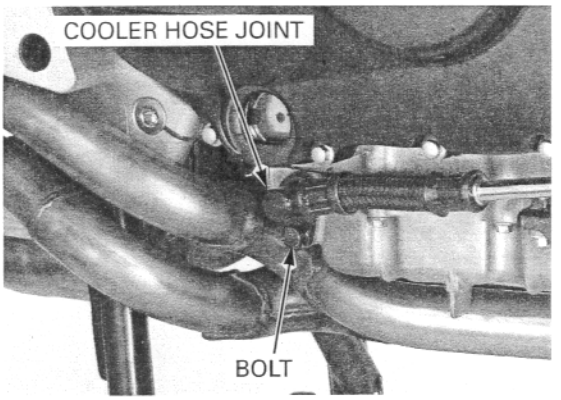

Coat new O-rings with engine oil and install them onto the oil cooler pipe flange.

Install the oil cooler pipes to the oil cooler.

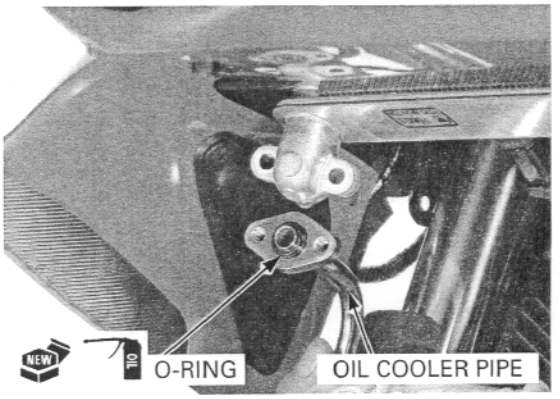

Install and tighten the oil cooler pipe joint SH bolts on each side.

Fill the crankcase with recommended engine oil and check for leaks (page 3-14).

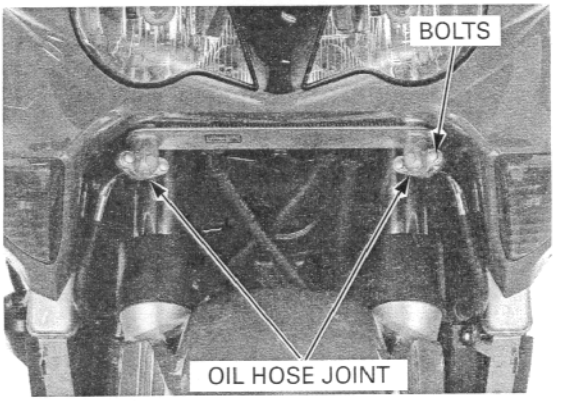

Install the oil cooler pipes stays and tighten the SH bolts securely.

Install the inner half cowl and side cowl (page 2-10).

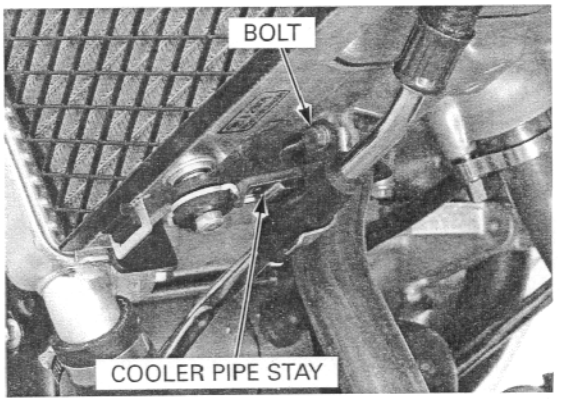

MEMO

5. FUEL SYSTEM (Programmed Fuel Injection)

COMPONENT LOCATION 5-2

SERVICE INFORMATION 5-3

TROUBLESHOOTING 5-4

SYSTEM LOCATION 5-5

SYSTEM DIAGRAM 5-6

PGM-FI (Programmed Fuel Injection) SYSTEM 5-7

PGM-FI SELF-DIAGNOSIS MALFUNCTION INDICATOR LAMP (MIL) FAILURE CODES 5-11

PGM-FI TROUBLESHOOTING 5-14

FUEL LINE INSPECTION 5-51

FUEL PUMP 5-54

FUEL CUT-OFF RELAY 5-56

FUEL TANK 5-56

AIR CLEANER HOUSING 5-60

THROTTLE BODY 5-63

INJECTOR 5-68

PRESSURE REGULATOR 5-70

FAST IDLE WAX UNIT 5-71

STARTER VALVE 5-72

STARTER VALVE SYNCHRONIZATION 5-75

MAP SENSOR 5-77

IAT SENSOR 5-78

ECT SENSOR 5-78

CAM PULSE GENERATOR 5-79

TP SENSOR 5-80

BANK ANGLE SENSOR 5-82

ENGINE STOP RELAY 5-83

ECM (ENGINE CONTROL MODULE) 5-83

VARIABLE AIR INTAKE CONTROL VALVE 5-85

PAIR SOLENOID VALVE 5-87

EVAP PURGE CONTROL SOLENOID VALVE (CALIFORNIA TYPE ONLY) 5-88

VTEC SPOOL VALVE 5-89

O_2 SENSOR 5-90

COMPONENT LOCATION

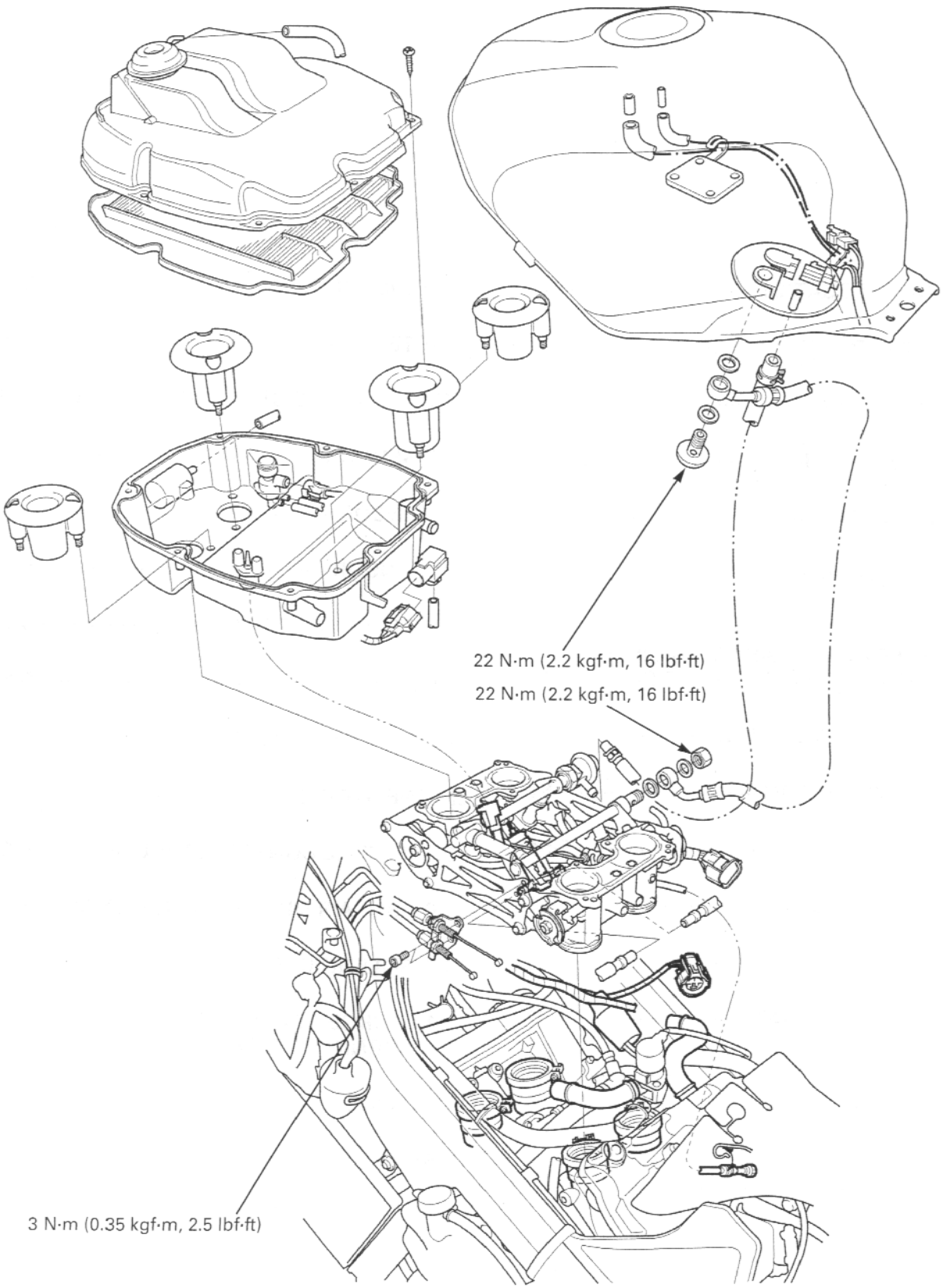

SERVICE INFORMATION

GENERAL

- Be sure to relieve the fuel pressure while the engine is OFF.
- Bending or twisting the control cables will impair smooth operation and could cause the cables to stick or bind, resulting in loss of vehicle control.
- Work in a well ventilated area. Smoking or allowing flames or sparks in the work area or where gasoline is stored can cause a fire or explosion.
- Do not apply commercially available carburetor cleaners to the inside of the throttle bore, which is coated with molybdenum.
- Do not snap the throttle valve from full open to full close after the throttle cable has been removed. It may cause incorrect idle operation.
- Seal the cylinder head intake ports with tape or a clean cloth to keep dirt and debris from entering the intake ports after the throttle body has been removed.
- Do not apply excessive force to the fuel pipe on the throttle body while removing or installing the throttle body.
- Do not damage the throttle body. It may cause incorrect throttle and idle valve synchronization.
- Prevent dirt and debris from entering the throttle bore, fuel hose and return hose, clean them using compressed air.
- The throttle body is factory pre-set. Do not disassemble in a way other than shown in this manual.
- Do not push the fuel pump base under the fuel tank when the fuel tank is stored.
- Always replace the packing when the fuel pump is removed.
- The programmed fuel injection system is equipped with the Self-Diagnostic System described (page 5-7). If the malfunction indicator lamp (MIL) blinks, follow the Self-Diagnostic Procedures to remedy the problem.
- When checking the PGM-FI, always follow the steps in the troubleshooting flow chart (page 5-11).
- The PGM-FI system is provided with a fail-safe function to secure a minimum running capability even when there is any trouble in the system. When any abnormality is detected by the self-diagnosis function, running capability is secured by making use of the numerical values of a situation preset in advance in the simulated program map. It must be remembered, however, that when any abnormality is detected in four injectors and/or the ignition and cam pulse generator, the fail safe function stops the engine to protect it from damage.
- Refer to PGM-FI system location (page 5-5).
- A faulty PGM-FI system is often related to poorly connected or corroded connectors. Check those connections before proceeding.
- Refer to procedures for fuel level sensor inspection (page 20-19).
- The vehicle speed sensor sends a digital pulse signal to the ECM (PGM-FI unit) for computation. Refer to procedures for vehicle speed sensor inspection (page 20-12).
- When disassembling the programmed fuel injection parts, note the location of the O-rings. Replace them with new ones upon reassembly.
- Before disconnecting the fuel hose, release the fuel pressure by loosening the fuel hose banjo bolt at the fuel tank.
- Always replace the sealing washers when the fuel hose banjo bolt is removed or loosened.
- Use a digital tester for PGM-FI system inspection.

SPECIFICATIONS

ITEM		SPECIFICATIONS
Throttle body identification number	Except California type	GQ33D
	California type	GQ33B
Starter valve vacuum difference		20mm Hg
Base throttle valve for synchronization		No.4
Idle speed		1,200 ± 100 rpm
Throttle grip free play		2 – 6 mm (1/16 – 1/4 in)
Intake air temperature sensor resistance (at 20°C/68°F)		1 – 4 kΩ
Engine coolant temperature sensor resistance (at 20°C/68°F)		2.3 – 2.6 Ω
Fuel injector resistance (at 20°C/68°F)		10.5 – 14.5 Ω
Bypass solenoid valve resistance (at 20°C/68°F)		28 – 32 Ω
PAIR solenoid valve resistance (at 20°C/68°F)		20 – 24 Ω
Purge control solenoid valve resistance (at 20°C/68°F)		30 – 34 Ω
Cam pulse generator peak voltage (at 20°C/68°F)		0.7 V minimum
Ignition pulse generator peak voltage (at 20°C/68°F)		0.7 V minimum
Manifold absolute pressure at idle		200 – 250 mm Hg
Fuel pressure at idle		250 kPa (2.5 kgf/cm^2, 36 psi)
Fuel pump flow (at 12V)		150 cm^3 (5.0 US oz, 5.3 Imp oz) minimum/10 seconds

TORQUE VALUES

ECT sensor	23 N·m (2.3 kgf·m, 17 lbf·ft)	
Throttle body insulator band screw	See page 1-15	
Throttle cable bracket socket bolt	3 N·m (0.35 kgf·m, 2.5 lbf·ft)	
Starter enrichment valve synchronization plate screw	1 N·m (0.09 kgf·m, 0.7 lbf·ft)	
Starter valve lock nut	2 N·m (0.18 kgf·m, 1.3 lbf·ft)	
Fast idle wax unit link plate screw	1 N·m (0.09 kgf·m, 0.7 lbf·ft)	
Fast idle wax unit mounting screw	5 N·m (0.5 kgf·m, 3.6 lbf·ft)	
Fuel pressure regulator	27 N·m (2.8 kgf·m, 20 lbf·ft)	
Fuel filler cap bolt	2 N·m (0.18 kgf·m, 1.3 lbf·ft)	
Fuel hose banjo bolt (fuel tank side)	22 N·m (2.2 kgf·m, 16 lbf·ft)	
Fuel hose sealing nut (throttle body side)	22 N·m (2.2 kgf·m, 16 lbf·ft)	
Fuel pump mounting nut	12 N·m (1.2 kgf·m, 9 lbf·ft)	See page 5-55 for tightening sequence
O_2 sensor	25 N·m (2.6 kgf·m, 19 lbf·ft)	
Fuel rail mounting bolt	10 N·m (1.0 kgf·m, 7 lbf·ft)	

TOOLS

Fuel pressure gauge	07406-0040003	or 07406-0040002
Peak voltage tester (U.S.A. only) or Peak voltage adaptor	07HGJ-0020100 (not available in U.S.A.) with Commercially available digital multimeter (impedance 10 MΩ/DCV minimum)	
ECM test harness 26P	070MZ-0010100	(two required)

TROUBLESHOOTING

Engine won't to start
- Intake air leak
- Fuel contaminated/deteriorated
- Pinched or clogged fuel hose
- Faulty fuel pump
- Clogged fuel filter
- Clogged fuel injector filter
- Sticking fuel injector needle
- Faulty fuel pump operating system

Engine stall, hard to start, rough idling
- Intake air leak
- Fuel contaminated/deteriorated
- Pinched or clogged fuel hose
- Idle speed misadjusted
- Starter valve synchronization misadjusted

Backfiring or misfiring during acceleration
- Ignition system malfunction

Poor performance (driveability) and poor fuel economy
- Pinched or clogged fuel hose
- Faulty pressure regulator

SYSTEM LOCATION

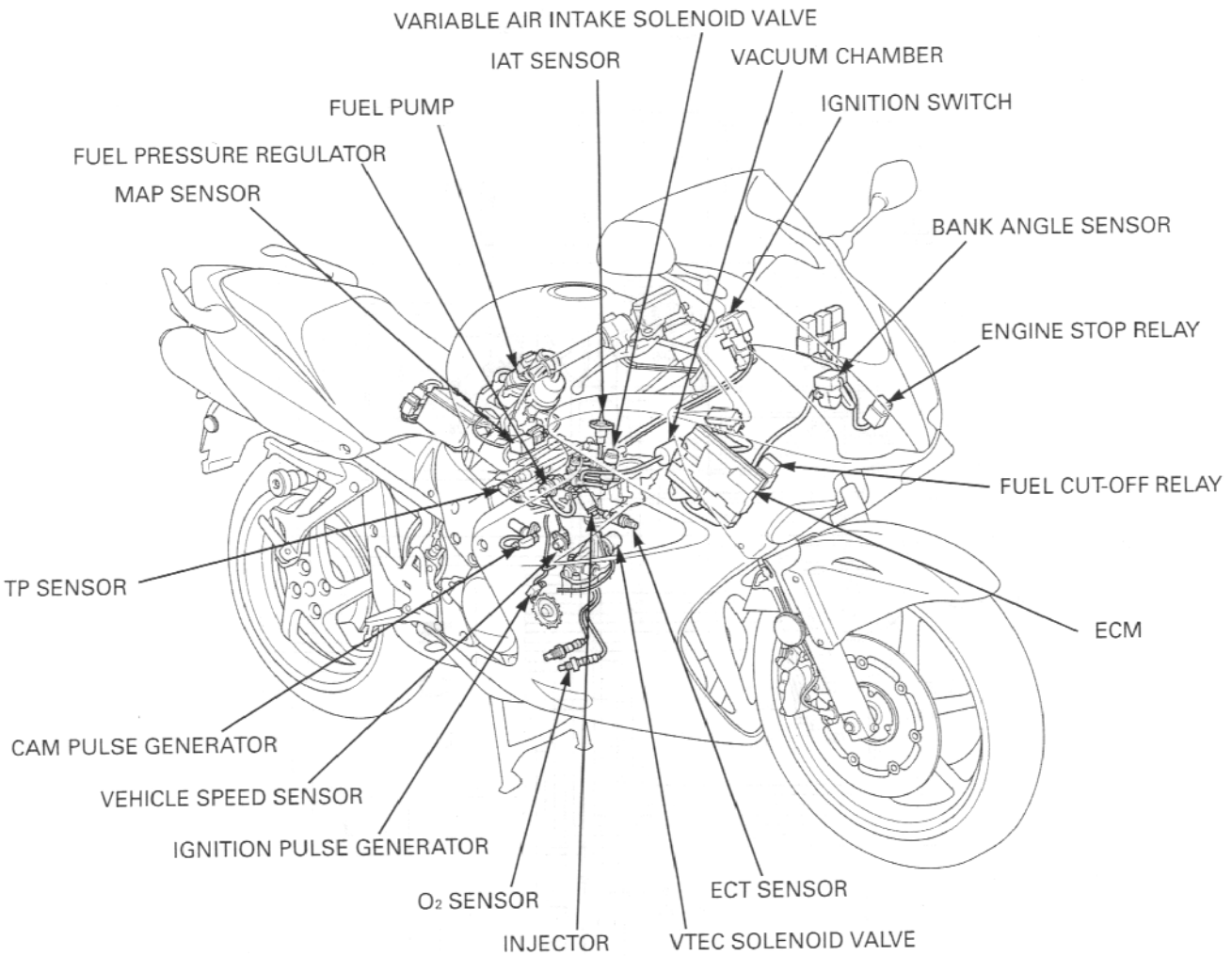

FULL NAME	ABBREVIATIONS
Manifold absolute pressure sensor	MAP sensor
Throttle position sensor	TP sensor
Intake air temperature sensor	IAT sensor
Engine coolant temperature sensor	ECT sensor
Engine control module	ECM

SYSTEM DIAGRAM

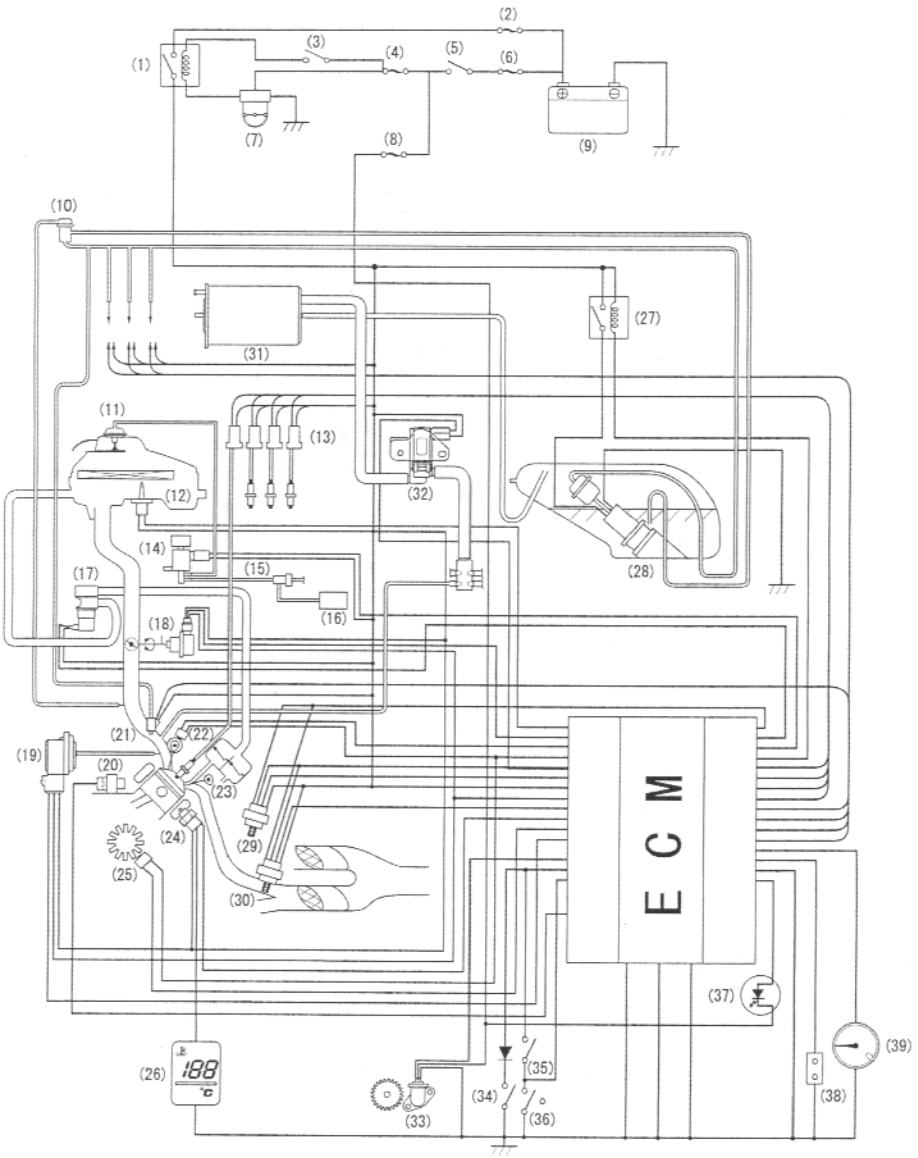

(1)	Engine stop relay	(21)	Injector
(2)	Main fuse B (30A)	(22)	Cam pulse generator
(3)	Engine stop switch	(23)	PAIR check valve
(4)	Sub-fuse (10A)	(24)	ECT sensor
(5)	Ignition switch	(25)	Ignition pulse generator
(6)	Main fuse A (30A)	(26)	Coolant temperature indicator
(7)	Bank angle sensor	(27)	Fuel cut-off relay
(8)	Sub-fuse (10A)	(28)	Fuel pump
(9)	Battery	(29)	No.1 O_2 sensor
(10)	Fuel pressure regulator	(30)	No.2 O_2 sensor
(11)	Variable intake port diaphragm	(31)	EVAP canister
(12)	IAT sensor	(32)	EVAP purge control valve
(13)	Direct ignition coil	(33)	Vehicle speed sensor
(14)	Bypass control solenoid valve	(34)	Neutral switch
(15)	One-way valve	(35)	Clutch switch
(16)	Vacuum chamber	(36)	Side stand switch
(17)	PAIR solenoid valve	(37)	PGM-FI malfunction indicator
(18)	TP sensor	(38)	Service check connector
(19)	MAP sensor	(39)	Tachometer
(20)	VTEC solenoid valve		

PGM-FI (Programmed Fuel Injection) SYSTEM

SELF-DIAGNOSTIC PROCEDURE

Place the motorcycle on its side stand.

Start the engine and let it idle.

The malfunction indicator lamp (MIL) will only blink with the side stand down, the engine off and the engine stop switch set to RUN or when engine revs are below 5,000 rpm. If any problems are present the MIL will illuminate and stay on.

If the malfunction indicator lamp (MIL) does not light or blink, the system has no memory of problem data. If the malfunction indicator blinks, note how many times the MIL blinks, and determine the cause of the problem (page 5-11).

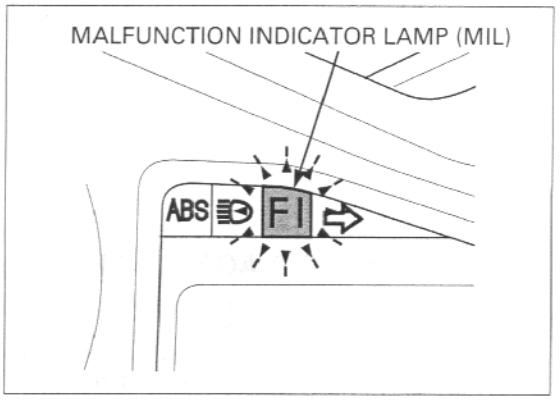

If you wish to read the PGM-FI memory for trouble data, perform the following:

Turn the ignition switch OFF.

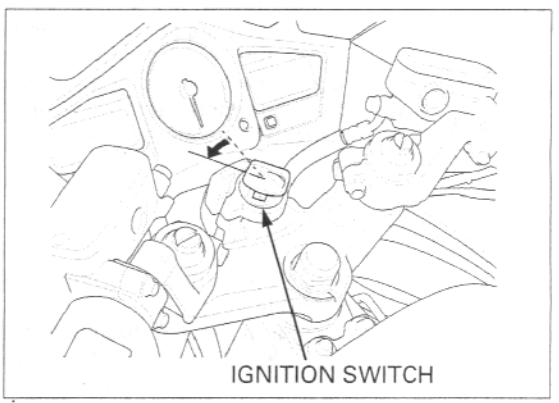

Remove the upper cowl (page 2-12).

Short the PGM-FI system service check connector terminals using a jumper wire.

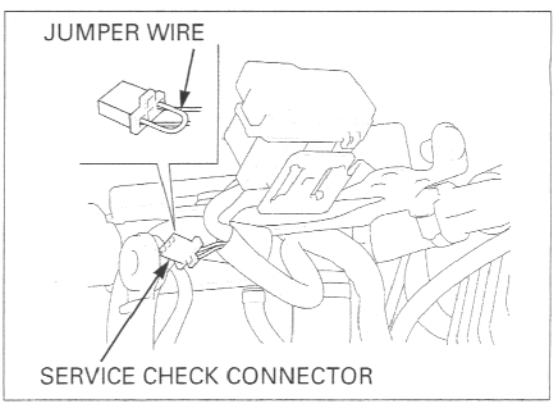

Turn the ignition switch ON and engine stop switch RUN.

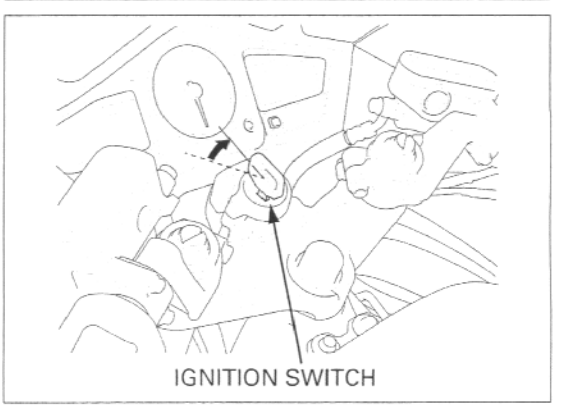

Even if the PGM-FI has memory data, the MIL does not blink when the engine running.

If the ECM has no self diagnosis memory data, the MIL will illuminate, when you turn the ignition switch ON.

If the ECM has self diagnosis memory data, the MIL will start blinking when you turn the ignition switch ON.

Note how many times the MIL blinks, and determine the cause of the problem (page 5-11)

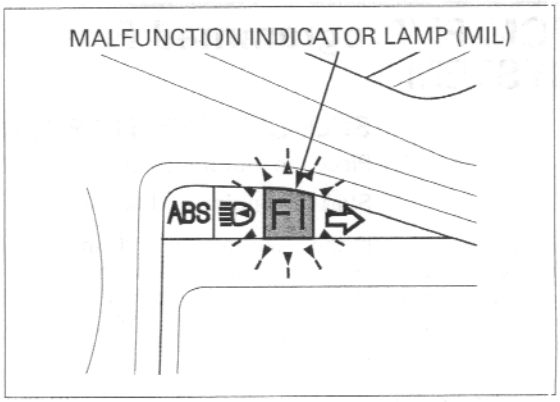

SELF-DIAGNOSIS RESET PROCEDURE

1. Turn the engine stop switch RUN and ignition switch OFF.
2. Short the service check connector of the PGM-FI system using a jumper wire.
3. Turn the ignition switch ON.
4. Remove the jumper wire from the service check connector.
5. The MIL lights about 5 seconds.
   While the indicator lights, short the service check connector again with the jumper wire
   Self diagnosis memory data is erased, if the MIL turns off and starts blinking.

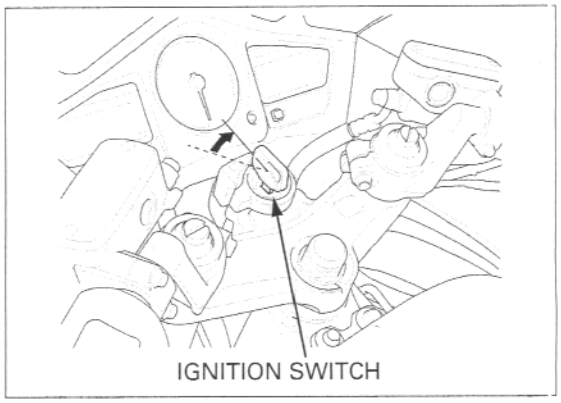

- The service check connector must be jumped while the indicator lights. If not, the MIL will not start blinking.
- Note that the self diagnosis memory data cannot be erased if you turn off the ignition switch before the MIL starts blinking.

If the MIL blinks 20 times, the data has not been erased, so try again.

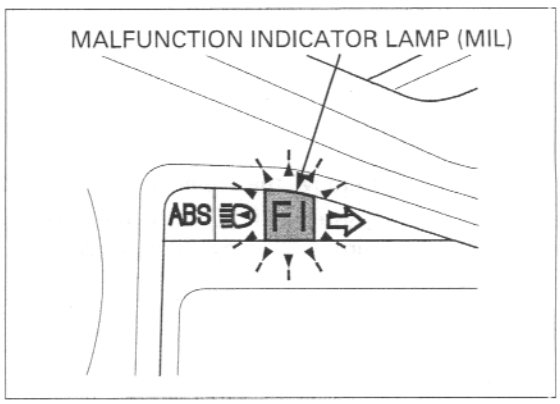

PEAK VOLTAGE INSPECTION PROCEDURE

- Use this procedure for the ignition pulse generator and cam pulse generator inspection.
- Check all system connections before inspection. If the system is disconnected, incorrect peak voltage might be measured.
- Check cylinder compression and check that all the spark plugs are installed correctly.
- Use a recommended digital multimeter or commercially available digital multimeter with an impedance of 10 MΩ/DCV minimum.
- If the Peak voltage tester (U.S.A. only) is used, follow the manufacturer's instruction.
- The display value differs depending upon the internal impedance of the multimeter.
- Disconnect the fuel pump connector before checking the peak voltage.

Open and support the fuel tank using the equipped tools (page 3-5).

Disconnect the fuel pump 2P (Brown) connector.

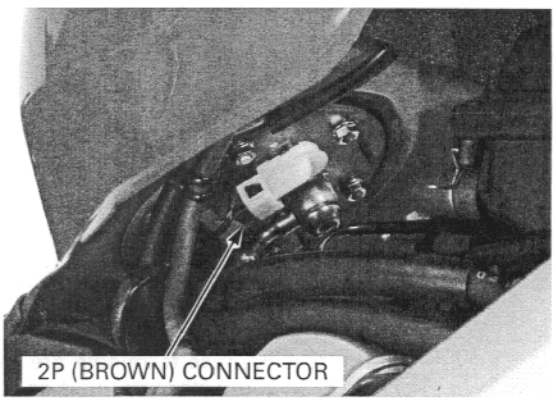

Avoid touching the tester probes to prevent electric shock.

Connect the peak voltage adaptor to the digital multimeter.

TOOLS:

Peak voltage tester (U.S.A. only) or	
Peak voltage adaptor	**07HGJ–0020100 (not available in U.S.A.) with commercially available digital multimeter (impedance 10 MΩ/DCV minimum)**

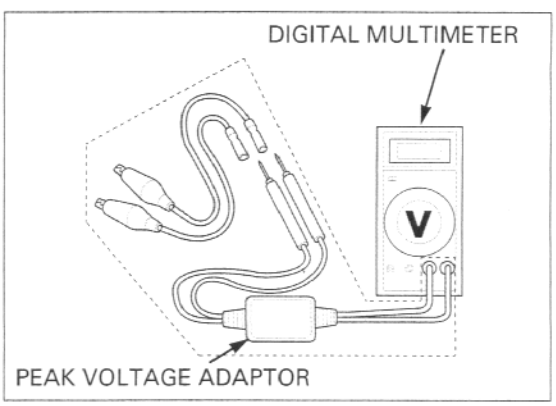

TEST HARNESS CONNECTION

Remove the upper cowl (page 2-12).

Disconnect the ECM 26P (Black) and 26P (Light gray) connectors from the ECM.

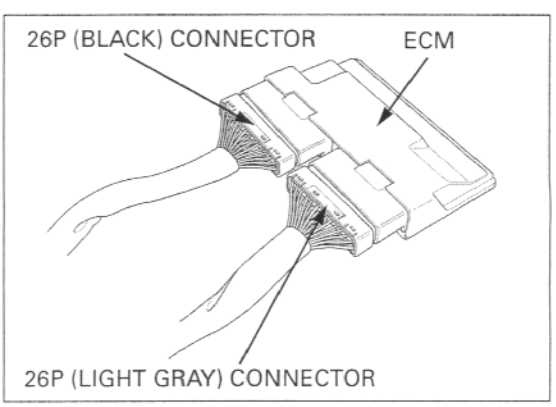

Connect the ECU test harnesses between the main wire harness and the ECM.

TOOL:

ECU test harness 26P	**070MZ–0010100 (two required)**

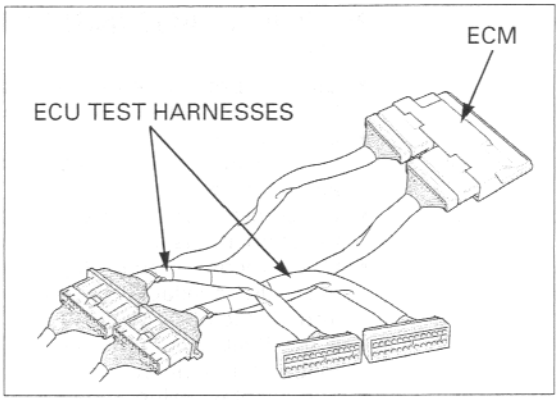

TEST HARNESS TERMINAL LAYOUT

The ECM connector terminals are numbered as shown in the illustration.

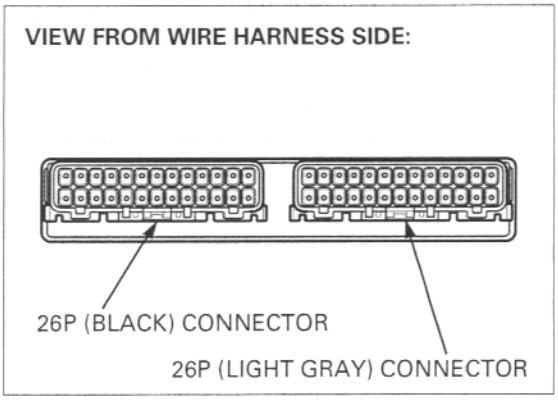

The test harness terminals are same layout as for the ECM connector terminals as shown.

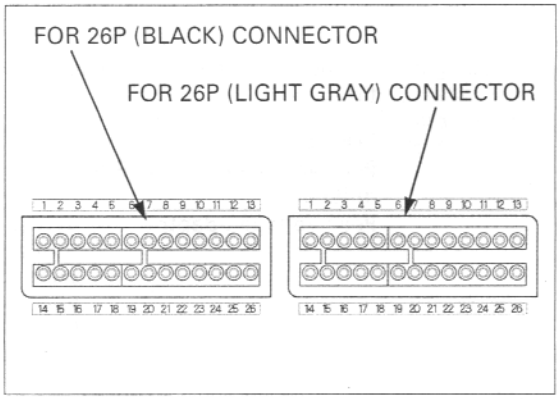

PGM-FI SELF-DIAGNOSIS MALFUNCTION INDICATOR LAMP (MIL) FAILURE CODES

- The PGM-FI MIL denotes the failure codes (the number of blinks from 0 to 33). When the indicator lights for 1.3 seconds it is equivalent to ten blinks. For example, a 1.3 second illumination and two blinks (0.5 second X 2) of the indicator equals 12 blinks. Follow code 12 troubleshooting (page 5-24).
- When more than one failure occurs, the MIL shows the blinks in the order of lowest number to highest number. For example; if the indicator blinks once, then two times, two failures have occurred. Follow codes 1 (page 5-14) and 2 (page 5-16) troubleshooting.

Number of PGM-FI MIL blinks		Causes	Symptoms	Refer to
0	○ No blinks	• Open circuit at the power input wire of the ECM • Faulty bank angle sensor • Open circuit in bank angle sensor related circuit • Faulty engine stop relay • Open circuit in engine stop relay related wires • Faulty engine stop switch • Open circuit in engine stop switch related wires • Faulty ignition switch • Faulty ECM • Blown PGM-FI fuse (30 A) • Open circuit in engine stop switch ground • Blown sub-fuse (10 A) (Starter/ignition)	• Engine does not start	5-83
	○ No blinks	• Open or short circuit in MIL wire • Faulty ECM	• Engine operates normally	5-7
	☼ Stay lit	• Short circuit in service check connector • Faulty ECM • Short circuit in service check connector wire	• Engine operates normally	–
1	☼ Blink	• Loose or poor contacts on MAP sensor connector • Open or short circuit in MAP sensor wire • Faulty MAP sensor	• Engine operates normally	5-14
2	☼ Blinks	• Loose or poor connection of the MAP sensor vacuum hose • Faulty MAP sensor	• Engine operates normally	5-16
7	☼ Blinks	• Loose or poor contact on ECT sensor • Open or short circuit in ECT sensor wire • Faulty ECT sensor open or short circuit in ECT sensor wire	• Hard start at a low temperature (Simulate using numerical values; 90 °C/194 °F)	5-17
8	☼ Blinks	• Loose or poor contact on TP sensor connector • Open or short circuit in TP sensor wire • Faulty TP sensor	• Poor engine response when operating the throttle quickly (Simulate using numerical values; Throttle opens 0°)	5-19
9	☼ Blinks	• Loose or poor contact on IAT sensor • Open or short circuit in IAT sensor wire • Faulty IAT sensor	• Engine operates normally (Simulate using numerical values; 25 °C/77 °F)	5-21

Number of PGM-FI MIL blinks		Causes	Symptoms	Refer to
11	 Blinks	• Loose or poor contact on vehicle speed sensor connector • Open or short circuit in vehicle speed sensor connector • Faulty vehicle speed sensor	• Engine operates normally	5-23
12	 Blinks	• Loose or poor contact on No.1 injector connector • Open or short circuit in No.1 injector wire • Faulty No.1 injector	• Engine does not start	5-24
13	 Blinks	• Loose or poor contact on No.2 injector connector • Open or short circuit in No.2 injector wire • Faulty No.2 injector	• Engine does not start	5-27
14	 Blinks	• Loose or poor contact on No.3 injector connector • Open or short circuit in No.3 injector wire • Faulty No.3 injector	• Engine does not start	5-29
15	 Blinks	• Loose or poor contact on No.4 injector connector • Open or short circuit in No.4 injector wire • Faulty No.4 injector	• Engine does not start	5-31
18	 Blinks	• Loose or poor contact on cam pulse generator • Open or short circuit in cam pulse generator • Faulty cam pulse generator	• Engine does not start	5-33
19	 Blinks	• Loose or poor contact on ignition pulse generator • Open or short circuit in ignition pulse generator • Faulty ignition pulse generator	• Engine does not start	5-35
21	 Blinks	• Faulty No.1 O_2 sensor	• Engine operates normally	5-37
22	 Blinks	• Faulty No.2 O_2 sensor	• Engine operates normally	5-39
23	 Blinks	• Faulty No.1 O_2 sensor heater	• Engine operates normally	5-41

Number of PGM-FI MIL blinks		Causes	Symptoms	Refer to
24	 Blinks	• Faulty No.2 O_2 sensor heater	• Engine operates normally	5-44
27	 Blinks	• Loose or poor contact on VTEC spool valve connector • Open or short circuit in VTEC spool valve • Faulty VTEC spool valve	• Engine operates normally	5-47
33	 Blinks	• Faulty E^2-PROM in ECM	• Engine operates normally • Does not hold the self-diagnosis data	5-49

PGM-FI TROUBLESHOOTING

PGM-FI MIL 1 BLINK (MAP SENSOR)

1. **MAP Sensor Connection Inspection**

   Turn the ignition switch OFF.

   Disconnect the MAP sensor 3P connector.

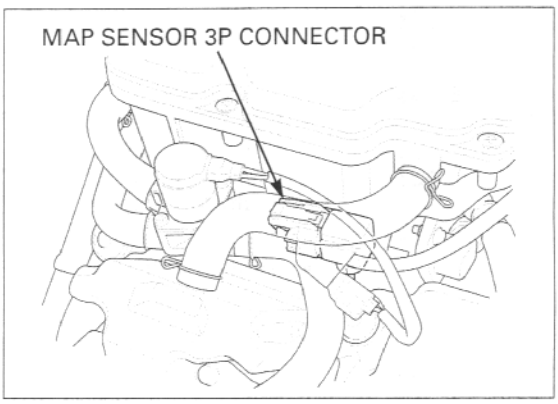

   Check for loose or poor contact on the MAP sensor connector.

   Connect the MAP sensor connector.

   Place the motorcycle on its side stand.

   Start the engine.

   Is the MIL blinking?

   NO – Loose or poor contact on the MAP sensor connector.

   YES – GO TO STEP 2.

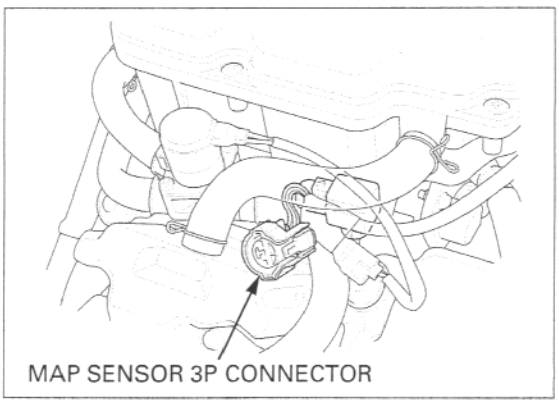

2. **MAP Sensor Power Input Line Voltage Inspection**

   Turn the ignition switch OFF.

   Disconnect the MAP sensor 3P connector.
   Measure the voltage at the wire harness side.

   Connection: Yellow/red (+) – Ground(–)
   Standard: 4.75 – 5.25 V

   Is the voltage within 4.75 – 5.25 V?

   No – • Open or short circuit in Yellow/red wire.
   • Loose or poor contact on the ECM connectors.

   YES – GO TO STEP 3.

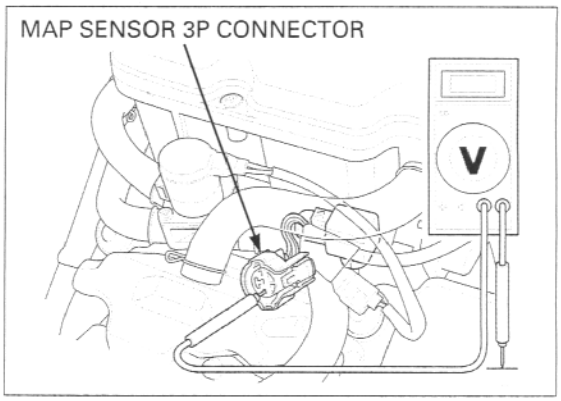

3. **MAP Sensor Ground Line Inspection**

Measure the voltage at the wire harness side.

Connection: Yellow/red (+) – Green/orange(–)
Standard: 4.75 – 5.25 V

Is the voltage within 4.75 – 5.25 V?

YES – • Open or short circuit in Green/orange.
• Loose or poor contact on the ECM connectors.

NO – GO TO STEP 4.

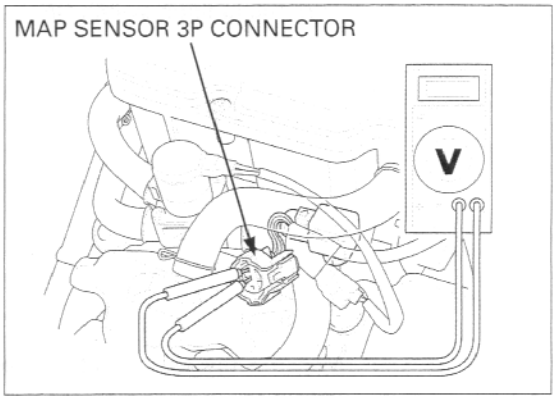

4. **MAP Sensor Output Line Inspection**

Measure the voltage at the wire harness side.

Connection: Light green/yellow (+) – Green/orange(–)
Standard: 4.75 – 5.25 V

Is the voltage within 4.75 – 5.25 V?

YES – • Open or short circuit in Light green/yellow wire.
• Loose or poor contact on the ECM connectors.

NO – GO TO STEP 5.

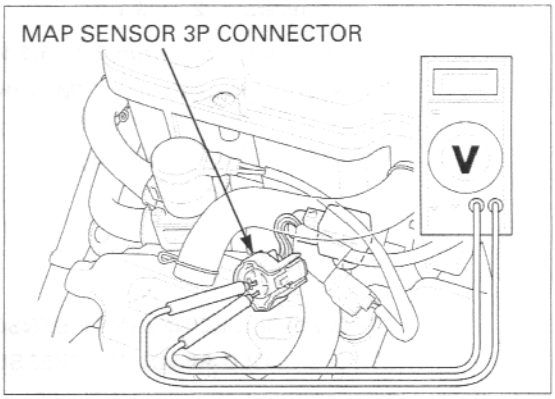

5. **MAP Sensor Signal Line Inspection**

Turn the ignition switch OFF.

Connect the MAP sensor 3P connector.

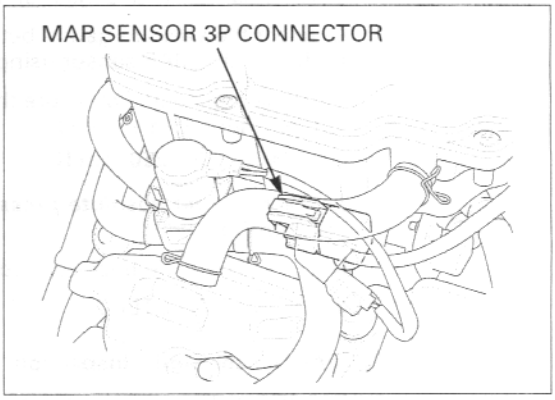

Disconnect the ECM connectors.
Connect the test harness to ECM connectors.
Turn the ignition switch ON.

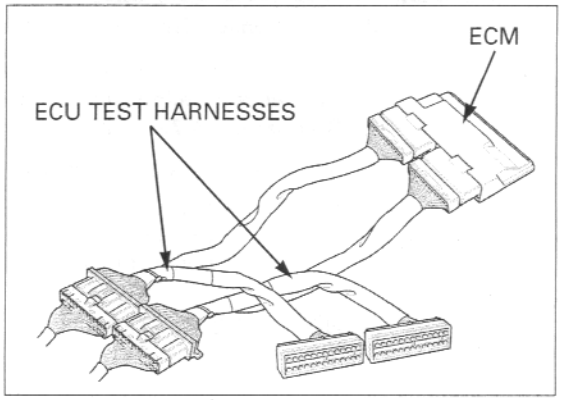

Measure the voltage at the test harness terminals.

Connection: A4 (+) – B16 (–)
Standard: 2.7 – 3.1 V

Is the voltage within 2.7 – 3.1 V?

YES – Replace the ECM with a new one, and inspect it again.

NO – Faulty MAP sensor.

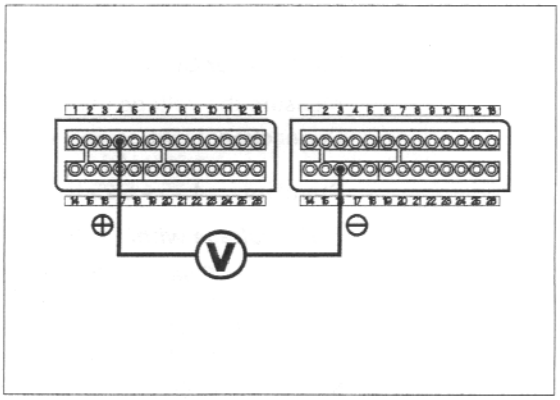

PGM-FI MIL 2 BLINKS (MAP SENSOR)

1. MANIFOLD ABSOLUTE PRESSURE TEST

Turn the ignition switch OFF.

Disconnect the MAP sensor 3P connector.

Connect the vacuum gauge between the throttle body and the MAP sensor using a 3-way joint.

Start the engine and measure the manifold absolute pressure at idle speed.

Standard: 150 – 250 mm Hg

Is the manifold absolute pressure within 150 – 250 mm Hg?

NO – Check the hose connection.

YES – GO TO STEP 2.

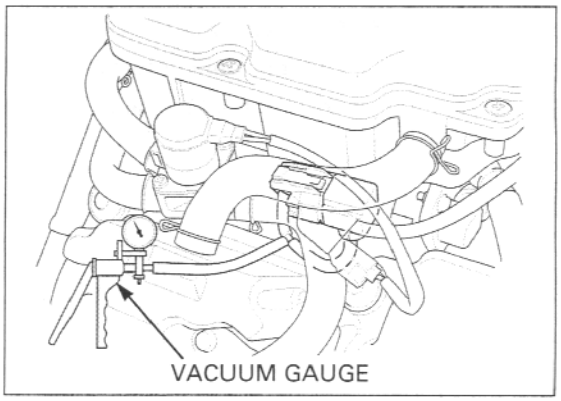

2. MAP Sensor Signal Inspection

Disconnect the vacuum gauge and connect the hose to the MAP sensor.

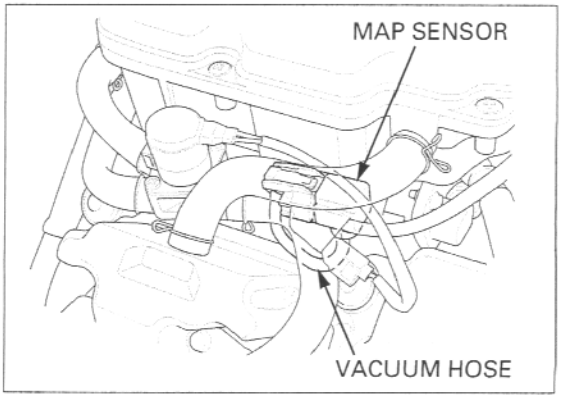

Disconnect the ECM connectors.
Connect the test harness to the ECM connectors.

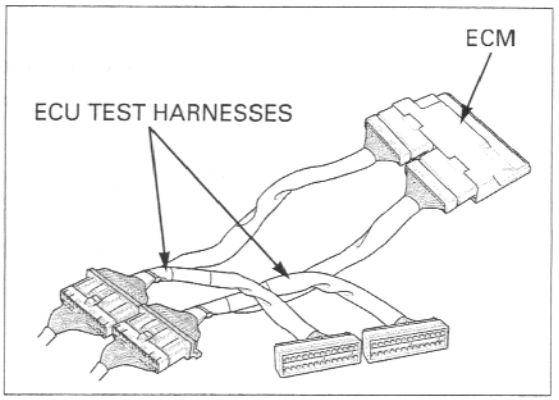

Turn the ignition switch ON.

Measure the voltage at the test harness terminals (page 5-10).

Connection: A4 (+) – B16 (–)
Standard: 2.7 – 3.1 V
(1,013 kPa/760 mmHg)

Is the voltage within 2.7 – 3.1 V?

No – Faulty MAP sensor.

YES – GO TO STEP 3.

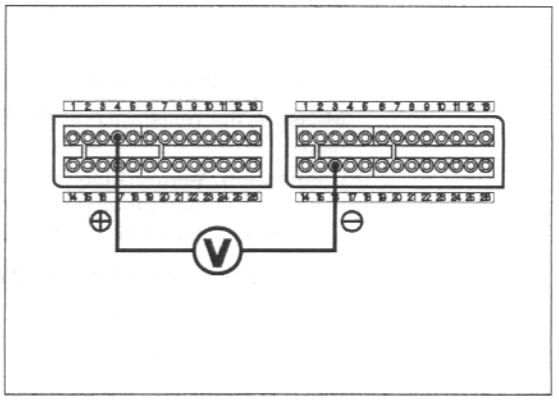

3. MAP Sensor Signal Inspection at Idle

Start the engine.

Measure the voltage at the test harness terminals (page 5-10).

Connection: A4 (+) – B16 (–)
Standard: 2.7 V minimum

Is the voltage at the standard value?

YES – Faulty MAP sensor.

NO – Replace the ECM with a new one, and inspect it again.

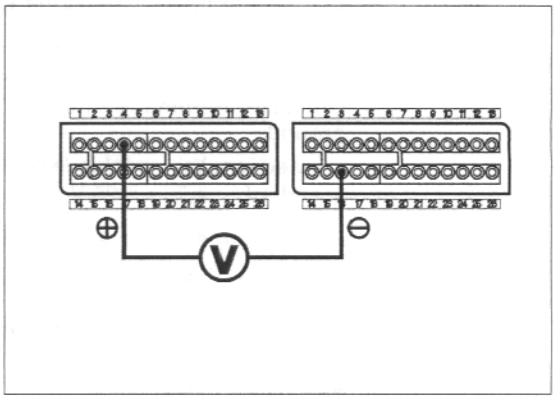

PGM-FI MIL 7 BLINKS (ECT SENSOR)

1. ECT Sensor Connection Inspection

Turn the ignition switch OFF.

Disconnect the ECT sensor 3P connector.

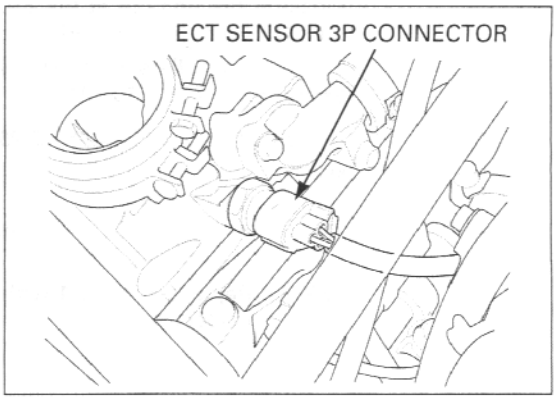

Check for loose or poor contact on the ECT sensor connector.

Place the motorcycle on its side stand.

Connect the ECT sensor 3P connector.

Turn the ignition switch ON.
Check the MIL blinks.

Is the MIL blinking?

NO – Loose or poor contact on the ECT sensor connector.

YES – GO TO STEP 2.

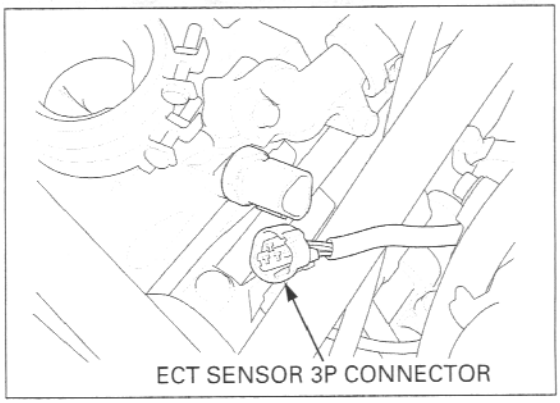

2. ECT Sensor Resistance Inspection

Turn the ignition switch OFF.

Disconnect the ECT sensor connector.

Measure the resistance at the ECT sensor terminals.

Connection: Yellow/blue (+) – Green/orange (–) (sensor side terminals)
Standard: 2.3 – 2.6 Ω (20 °C/68 °F)

Is the resistance within 2.3 – 2.6 Ω (20 °C/68 °F)?

NO – Faulty ECT sensor.

YES – GO TO STEP 3.

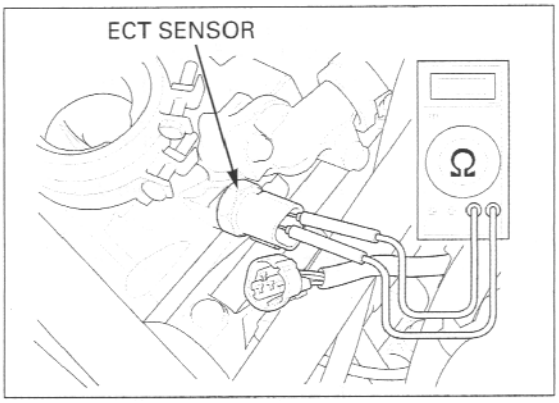

3. ECT Sensor Power Input Line Voltage Inspection

Turn the ignition switch ON.

Measure the voltage between the ECT sensor connector terminal of the wire harness side and ground.

Connection: Yellow/blue (+) – Ground (–)
Standard: 4.75 – 5.25 V

Is the voltage within 4.75 – 5.25 V?

No – • Open or short circuit in Yellow/blue wire.
• Loose or poor contact on the ECM connectors.

YES – GO TO STEP 4.

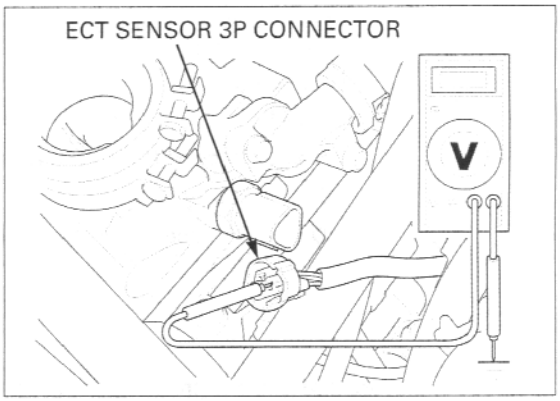

4. ECT Sensor Signal Line Voltage Inspection

Measure the voltage at the ECT sensor connector of the wire harness side.

Connection: Yellow/blue (+) – Green/orange(–)
Standard: 4.75 – 5.25 V

Is the voltage within 4.75 – 5.25 V?

No – • Open or short circuit in Green/orange wire.
• Loose or poor contact on the ECM connectors.

YES – Replace the ECM with a new one, and inspect it again.

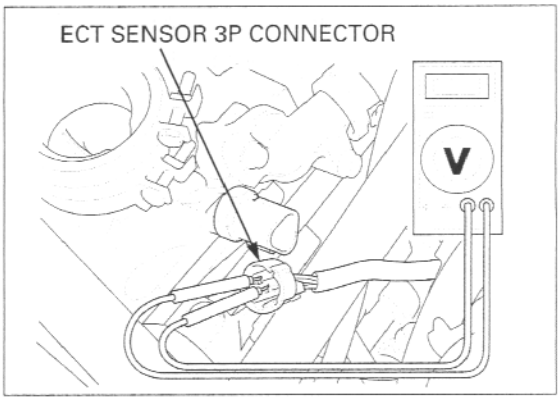

PGM-FI MIL 8 BLINKS (TP SENSOR)

1. **TP Sensor Connection Inspection**

Turn the ignition switch OFF.

Disconnect the TP sensor 3P connector.

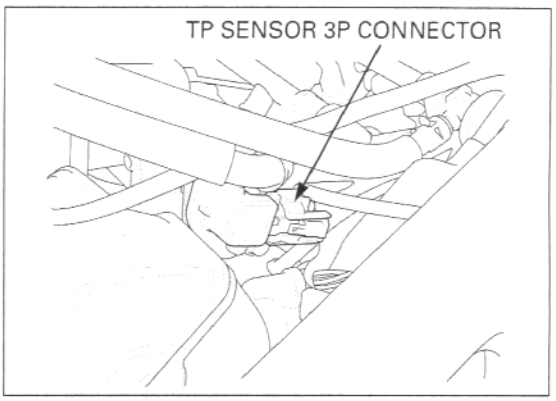

Check for loose or poor contact on the TP sensor connector.
Connect the TP sensor connector.

Place the motorcycle on its side stand.

Start the engine and check that the MIL blinks.

Is the MIL blinking?

NO – Loose or poor contact on the ECT sensor connector.

YES – GO TO STEP 2.

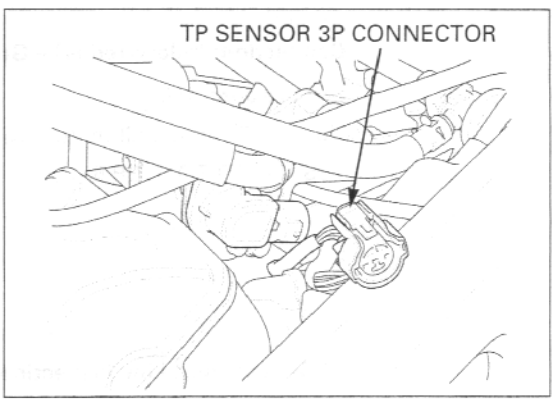

2. **TP Sensor Input Voltage Inspection**

Turn the ignition switch OFF.

Disconnect the TP sensor 3P connector.

Turn the ignition switch ON.

Measure the voltage between the wire harness side connector terminal and ground.

Connection: Pink (+) – Ground (–)
Standard: 4.75 – 5.25 V

Is the voltage within 4.75 – 5.25 V?

NO – • Open or short circuit in the Pink wire.
• Loose or poor contact on the ECM connectors.

YES – GO TO STEP 3.

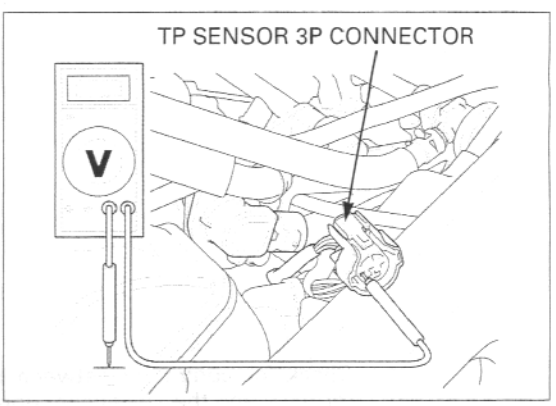

3. **TP Sensor Power Input Line Voltage Inspection**

Measure the voltage between at the TP sensor terminal of the wire harness side.

Connection: Pink (+) – Green/orange(–)
Standard: 4.75 – 5.25 V

Is the voltage within 4.75 – 5.25 V?

No – • Open or short circuit in Green/orange wire
• Loose or poor contact on the ECM connectors.

YES – GO TO STEP 4.

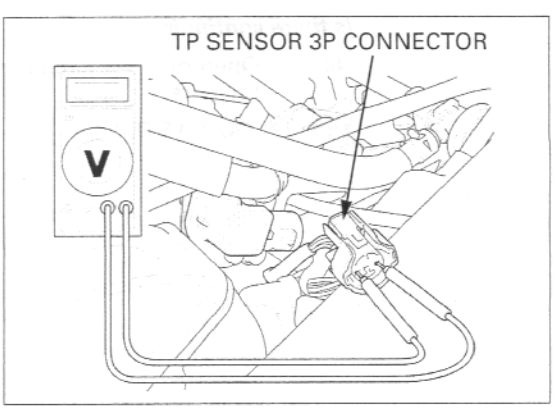

4. TP Sensor Line Short Circuit Inspection

Turn the ignition switch OFF.
Disconnect the ECM 26P connectors.

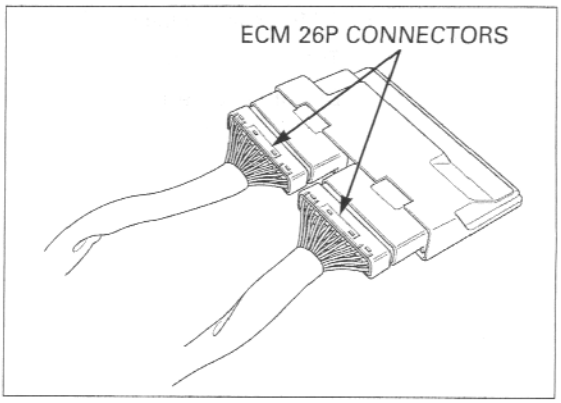

Check for continuity between the TP sensor 3P connector terminal of the wire harness side and ground.

Connection: Yellow/red (+) – Ground (–)

Is there continuity?

No – Short circuit in Yellow/red wire.

YES – GO TO STEP 5.

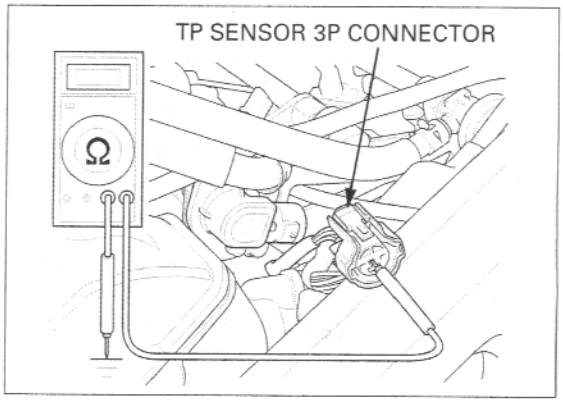

5. TP Sensor Input Line Inspection

Connect the test harness to ECM connectors.

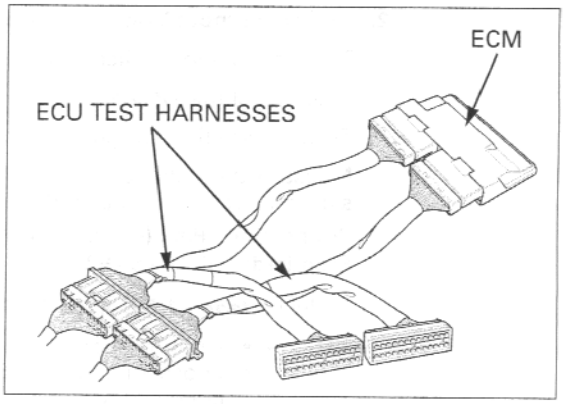

Check for continuity between the test harness terminal and the TP sensor connector terminal.

Connection: Pink – A16

Is there continuity?

No – Open or short circuit in Pink or Yellow/red wire.

YES – GO TO STEP 6.

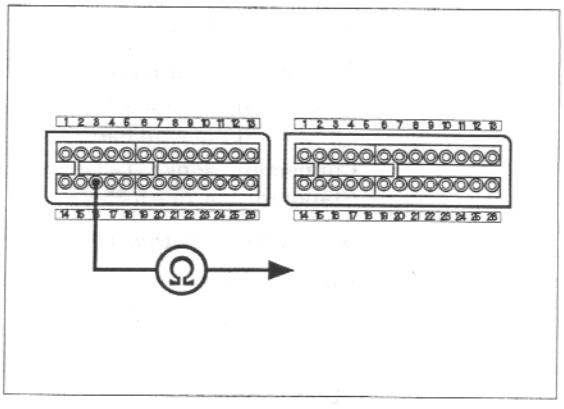

6. TP Sensor Voltage at ECM

Connect the TP sensor 3P connector.

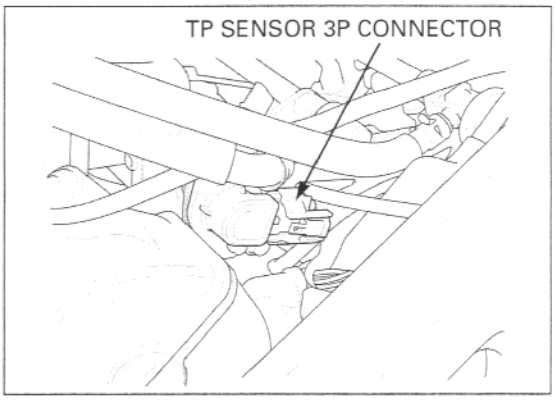

Turn the ignition switch ON.
Measure the voltage at the test harness terminals.

Connection: A16 (+) – B16 (–)
Standard: *0.4 – 0.6 V (throttle fully closed)
***4.2 – 4.8 V (throttle fully open)**

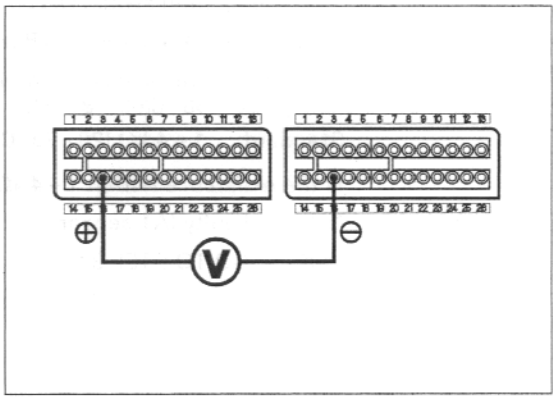

- A voltage marked * refers to the value when the voltage reading at the TP sensor 3P connector (page 5-19) shows 5 V.
  When the reading shows other than 5 V, derive a voltage at the test harness as follows:
  In the case of a voltage of 4.75 V at the TP sensor 3P connector:
  0.4 X 4.75/5.0 = 0.38 V
  0.6 X 4.75/5.0 = 0.57 V
  Thus, the solution is "0.38 – 0.57 V" with the throttle fully closed.
  Replace 0.4 and 0.6 with 4.2 and 4.8 respectively, in the above equations to determine the throttle fully open range.

Is the voltage within standard value?

NO – Faulty TP sensor.

YES – Replace the ECM with a new one, and inspect it again.

PGM-FI MIL 9 BLINKS (IAT SENSOR)

1. IAT Sensor Connection Inspection

Turn the ignition switch OFF.

Disconnect the IAT sensor 2P connector.

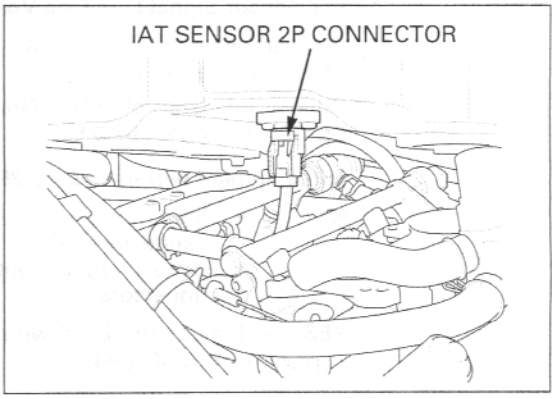

Check for loose or poor contact on the IAT sensor connector.

Connect the IAT sensor 2P connector.

Turn the ignition switch ON.
Check the MIL blinks.

Is the MIL blinking?

NO – Loose or poor contact on the IAT sensor connector.

YES – GO TO STEP 2.

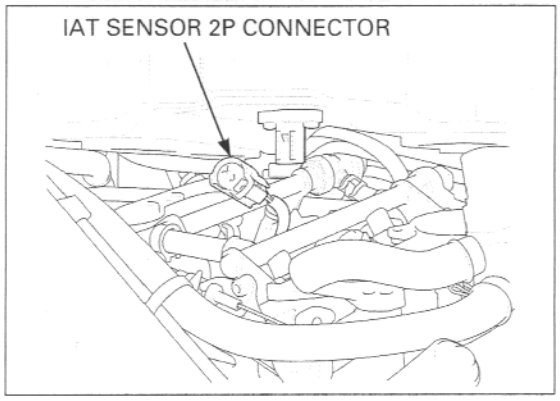

2. IAT Sensor Resistance Inspection

Turn the ignition switch OFF.

Disconnect the IAT sensor 2P connector.

Measure the resistance at the IAT sensor terminals (at 20 – 30 °C/68 – 86 °F).

Standard: 1 – 4 kΩ (20 - 30 °C/68 - 86 °F)

Is the resistance within 1 – 4 kΩ?

NO – Faulty IAT sensor.

YES – GO TO STEP 3.

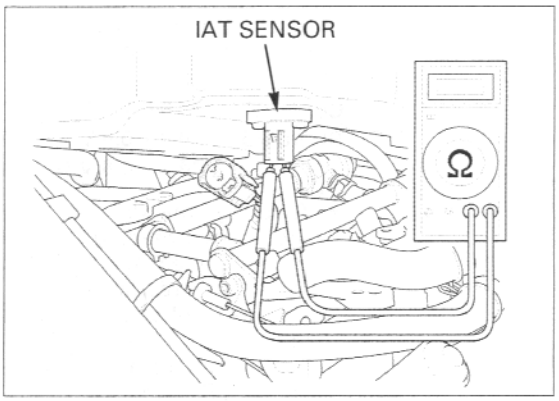

3. IAT Sensor Power Input Line Voltage Inspection

Turn the ignition switch ON.

Measure the voltage between the IAT sensor connector terminal of the wire harness side and ground.

Connection: Gray/blue (+) – Ground (–)
Standard: 4.75 – 5.25 V

Is the voltage within 4.75 – 5.25 V?

No – • Open or short circuit in Gray/blue wire.
• Loose or poor contact on the ECM connectors.

YES – GO TO STEP 4.

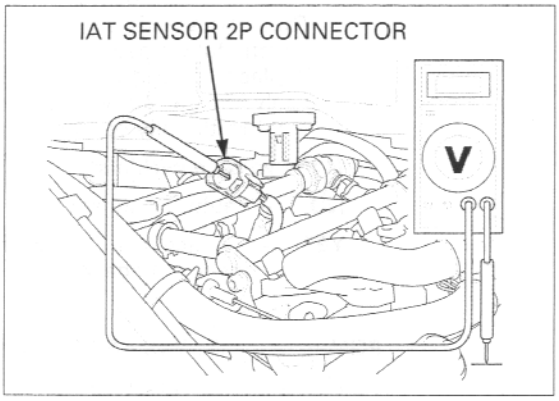

4. IAT Sensor Signal Line Line Voltage Inspection

Measure the voltage at the IAT sensor connector of the wire harness side.

Connection: Gray/blue (+) – Green/orange (–)
Standard: 4.75 – 5.25 V

Is the voltage within 4.75 – 5.25 V?

No – • Open or short circuit in Green/orange wire.
• Loose or poor contact on the ECM connectors.

YES – Replace the ECM with a new one, and inspect it again.

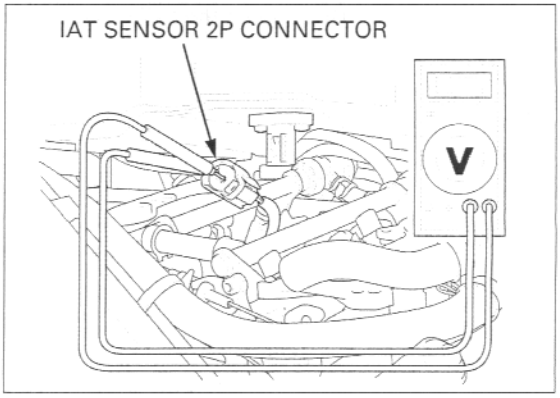

PGM-FI MIL 11 BLINKS (VEHICLE SPEED SENSOR)

1. Vehicle Speed Sensor Connection Inspection

Turn the ignition switch OFF.
Disconnect the vehicle speed sensor 3P connector.

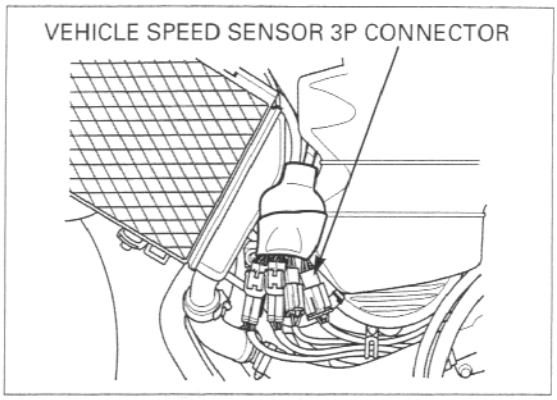

Check for loose or poor contact on the vehicle speed sensor connector.

Connect the vehicle speed sensor connector.

Ride the motorcycle and keep the engine rpm more than 5,000 rpm about 20 seconds or more.

Put the side stand down, and check that the MIL blinks.

Is the MIL blinking?

NO – Loose or poor contact on the vehicle speed sensor connector.

YES – GO TO STEP 2.

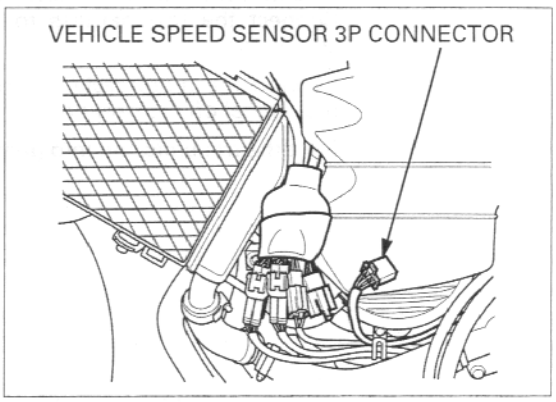

2. Vehicle Speed Sensor Power Input Line Voltage Inspection

Turn the ignition switch OFF.

Disconnect the vehicle speed sensor 3P connector.

Turn the ignition switch ON.

Measure the voltage at the wire harness side.

Connection: Brown/blue (+) – Green/black (–)
Standard: Battery voltage

Does battery voltage exist?

No – • Open or short circuit in Brown/blue wire of wire harness.
• Open or short circuit in Green/black wire of wire harness.

YES – GO TO STEP 3.

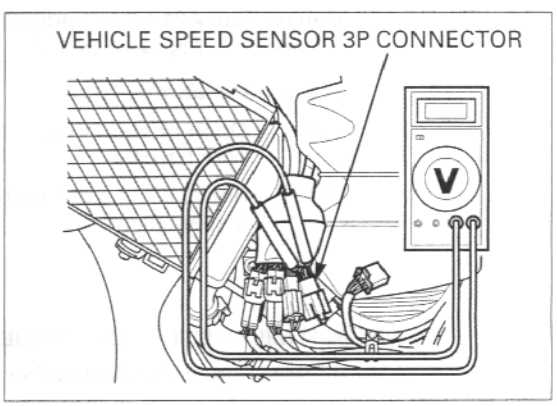

3. **Vehicle Speed Sensor Pulse Signal Voltage Inspection**

Connect the vehicle speed sensor 3P connector.

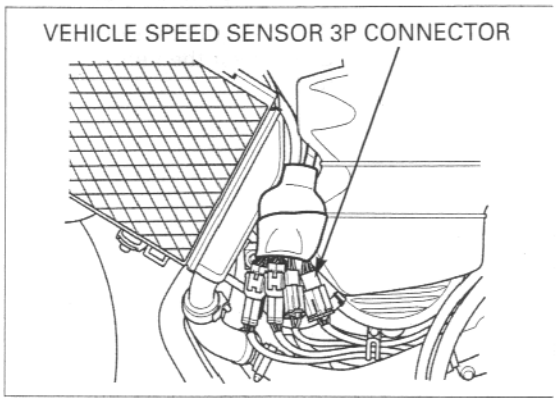

Disconnect the ECM connectors.
Connect the test harness to the wire harness connectors.

Support the motorcycle securely and place the rear wheel off the ground.

Shift the transmission into gear.

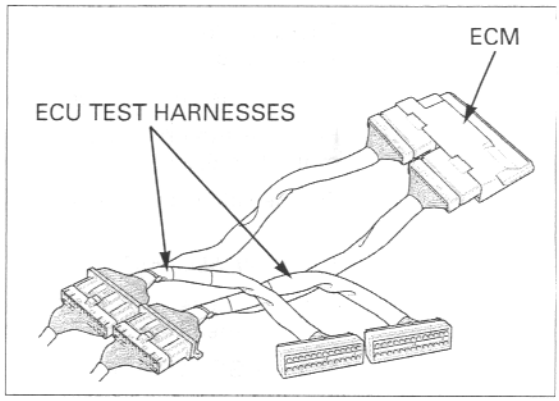

Measure the voltage at the test harness terminals with the ignition switch is ON while slowly turning the rear wheel by hand.

Connection: A21 (+) – Ground (–)
Standard: Repeat 0 to 5 V

Is there standard voltage?

YES – Open or short circuit in Pink wire of the wire harness.

NO – Replace the ECM with a new one, and inspect it again.

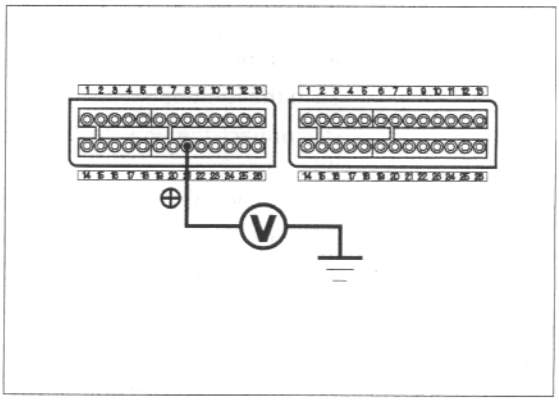

PGM-FI MIL 12 BLINKS (No. 1 INJECTOR)

1. **Injector Connection Inspection**

Turn the ignition switch OFF.
Disconnect the No. 1 injector 2P connector.

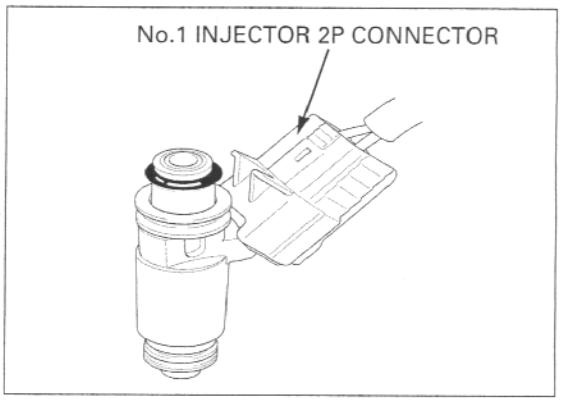

Check for loose or poor contact on the No.1 injector 2P connector.

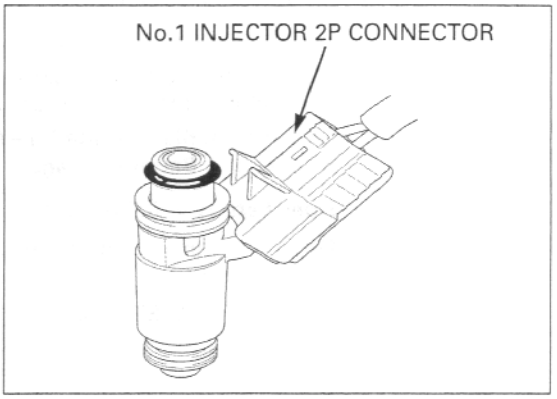

Connect the No.1 injector 2P connector.

Turn the ignition switch ON.
Check that the MIL blinks.

Is the MIL blinking?

NO – Loose or poor contact on the No.1 injector connector.

YES – GO TO STEP 2.

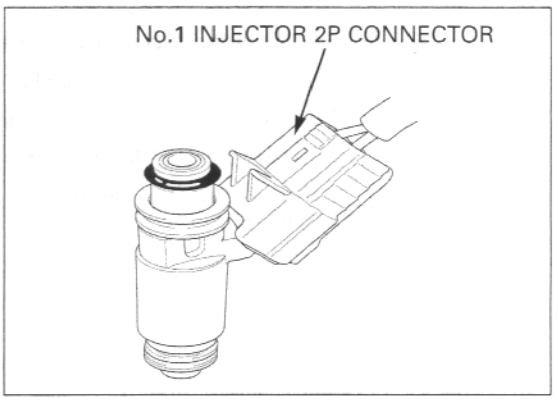

2. No.1 Injector Resistance Inspection

Turn the ignition switch OFF.

Disconnect the No.1 injector 2P connector and measure the resistance of the No.1 injector 2P connector terminals.

Connection: Black/white (+) – Pink/blue (–)
Standard: 10.5 – 14.5 Ω (20 °C/68 °F)

Is the resistance within 10.5 – 14.5 Ω (20 °C/68 °F)?

NO – Faulty No.1 injector.

YES – GO TO STEP 3.

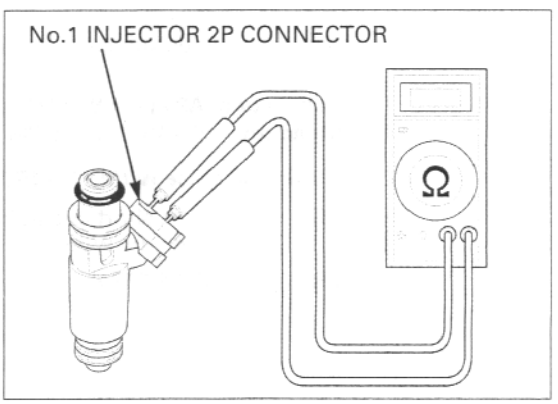

3. No.1 Injector Short Circuit Inspection

Check for continuity between the No.1 injector and ground.

Connection: Black/white (+) – Ground (–)

Is there continuity?

YES – Faulty No.1 injector.

NO – GO TO STEP 4.

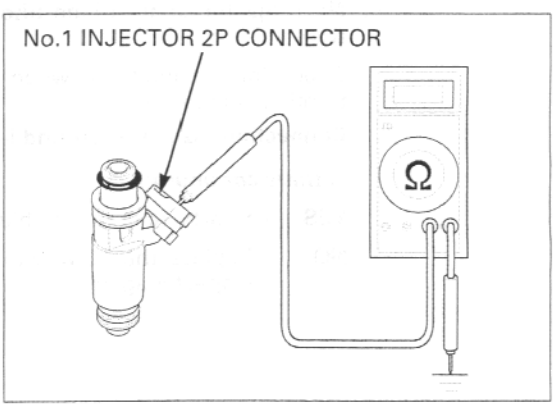

4. **No.1 Injector Power Input Line Inspection**

Turn the ignition switch ON.

Measure the voltage between the No. 1 injector connector of the wire harness side and ground.

Connection: Black/white (+) – Ground (–)
Standard: Battery voltage

Does battery voltage exist?

No – Open or short circuit in Black/white wire.

YES – GO TO STEP 5.

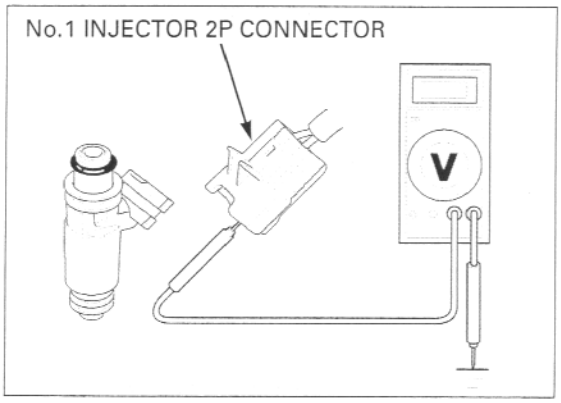

5. **No.1 Injector Resistance Inspection at ECM**

Turn the ignition switch OFF.

Connect the No. 1 injector connector.

Disconnect the ECM connectors.

Connect the test harness to the wire harness connectors.

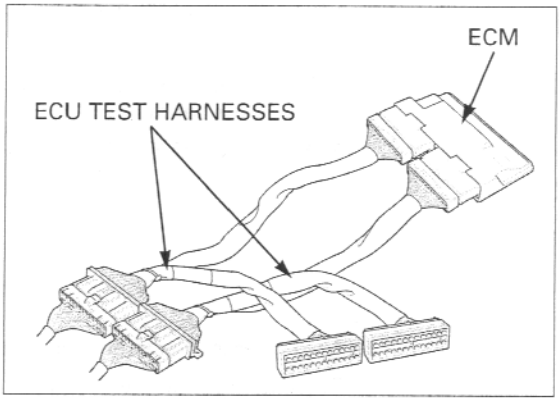

Measure the resistance at the test harness terminals.

Connection: A24 (–) – B12 (+)
Standard: 9 – 15 Ω (20 °C/68 °F)

Is the resistance within 9 – 15 Ω (20 °C/68 °F)?

NO – Open or short circuit in Black/white and/or Pink/blue wire.

YES – GO TO STEP 6.

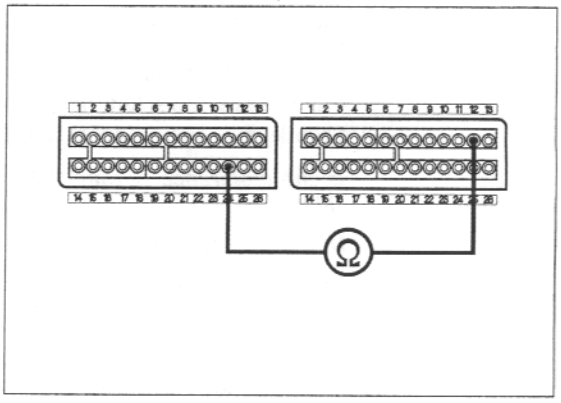

6. **No.1 Injector Control Line Short Circuit Inspection**

Check for continuity between the test harness terminal and ground.

Connection: A24 (+) – Ground (–)

Is there continuity?

YES – Short circuit in Pink/blue wire.

NO – Replace the ECM with a new one, and inspect it again.

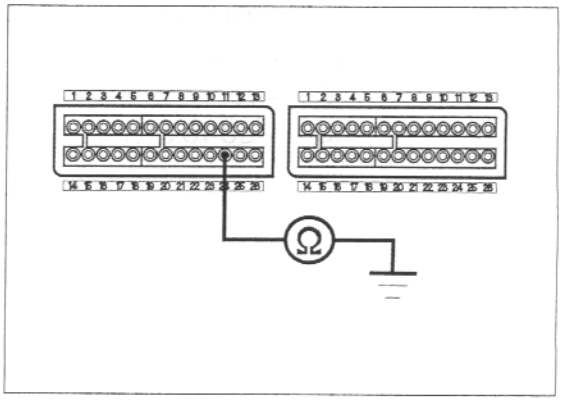

PGM-FI MIL 13 BLINKS (No. 2 INJECTOR)

1. Injector Connection Inspection

Turn the ignition switch OFF.
Disconnect the No. 2 injector 2P connector.

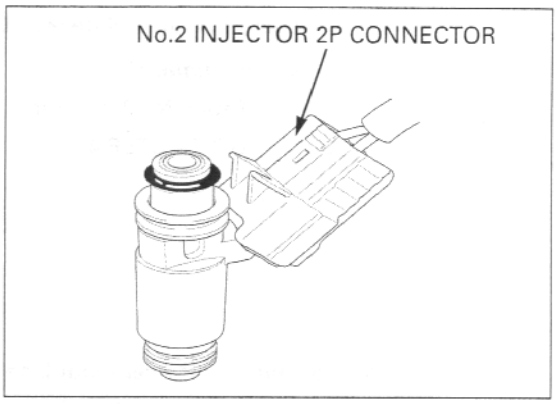

Check for loose or poor contact on the No.2 injector 2P connector.

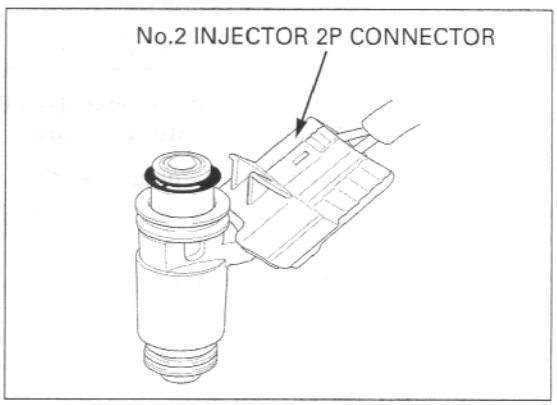

Connect the No.2 injector 2P connector.

Turn the ignition switch ON.
Check that the MIL blinks.

Is the MIL blinking?

NO – Loose or poor contact on the No.2 injector connector.

YES – GO TO STEP 2.

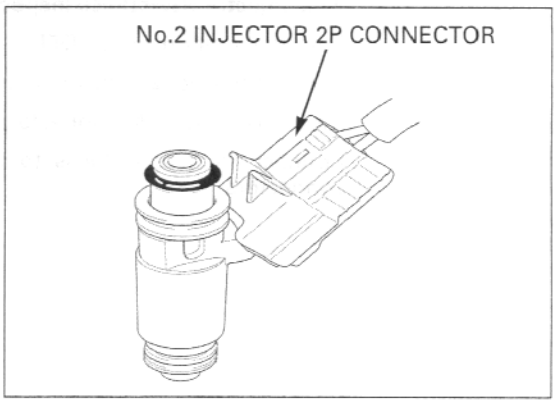

2. No.2 Injector Resistance Inspection

Turn the ignition switch OFF.

Disconnect the No.2 injector 2P connector and measure the resistance of the No.2 injector 2P connector terminals.

Connection: Black/white (+) – Red/yellow (–)
Standard: 10.5 – 14.5 Ω (20 °C/68 °F)

Is the resistance within 10.5 – 14.5 Ω (20 °C/68 °F)?

NO – Faulty No.2 injector.

YES – GO TO STEP 3.

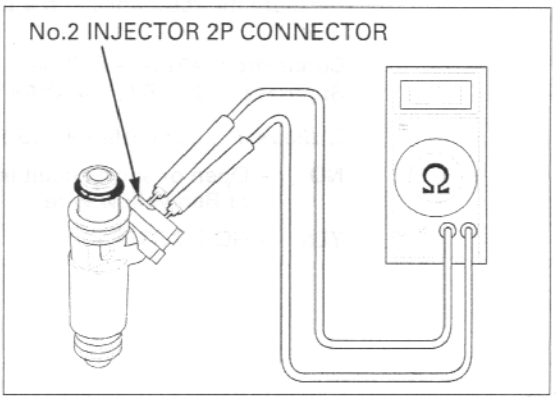

3. **No.2 Injector Short Circuit Inspection**

Check for continuity between the No.2 injector and ground.

Connection: Black/white (+) – Ground (–)

Is there continuity?

YES – Faulty No.2 injector.

NO – GO TO STEP 4.

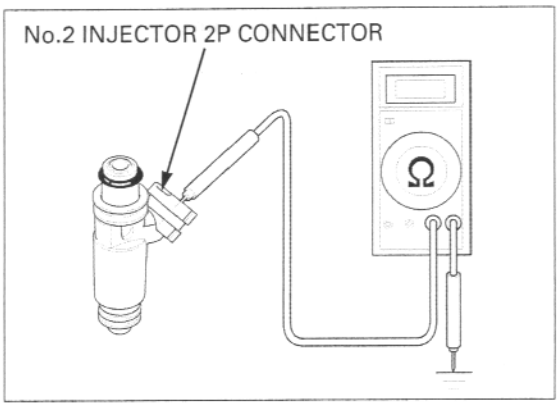

4. **No.2 Injector Power Input Line Inspection**

Turn the ignition switch ON.

Measure the voltage between the No. 2 injector connector of the wire harness side and ground.

Connection: Black/white (+) – Ground (–)
Standard: Battery voltage

Does battery voltage exist?

No – Open or short circuit in Black/white wire.

YES – GO TO STEP 5.

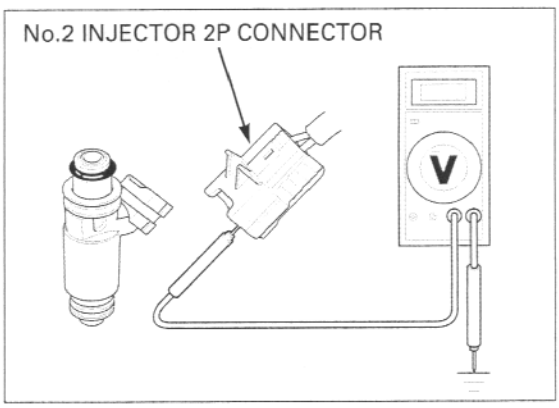

5. **No.2 Injector Resistance Inspection at ECM**

Turn the ignition switch OFF.

Connect the No. 2 injector connector.

Disconnect the ECM connectors.

Connect the test harness to the wire harness connectors.

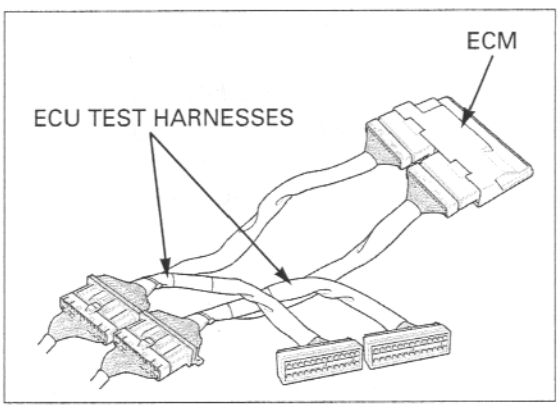

Measure the resistance at the test harness terminals.

Connection: A11 (–) – B12 (+)
Standard: 9 – 15 Ω (20 °C/68 °F)

Is the resistance within 9 – 15 Ω (20 °C/68 °F)?

NO – Open or short circuit in Black/white and/or Red/yellow wire.

YES – GO TO STEP 6.

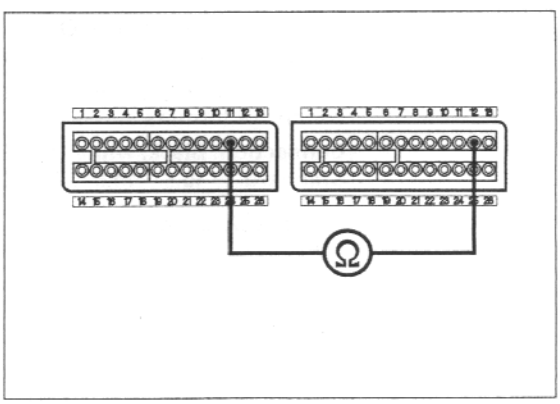

6. **No.2 Injector Control Line Short Circuit Inspection**

Check for continuity between the test harness terminal and ground.

Connection: A11 (+) – Ground (–)

Is there continuity?

YES – Short circuit in Red/yellow wire.

NO – Replace the ECM with a new one, and inspect it again.

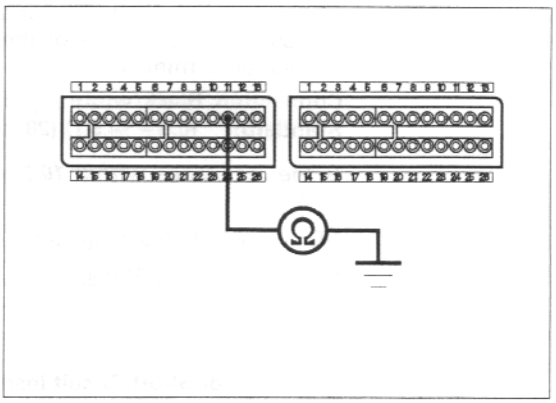

PGM-FI MIL 14 BLINKS (No. 3 INJECTOR)

1. **Injector Connection Inspection**

Turn the ignition switch OFF.
Disconnect the No. 3 injector 2P connector.

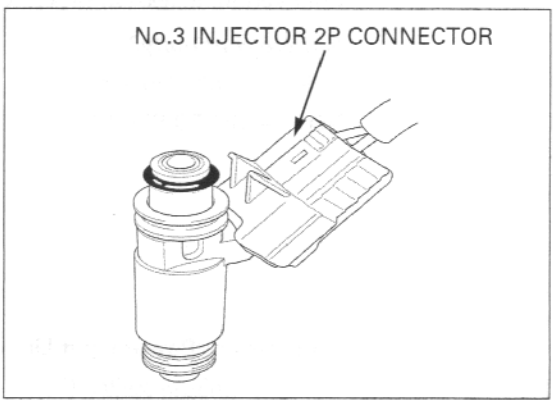

Check for loose or poor contact on the No.3 injector 2P connector.

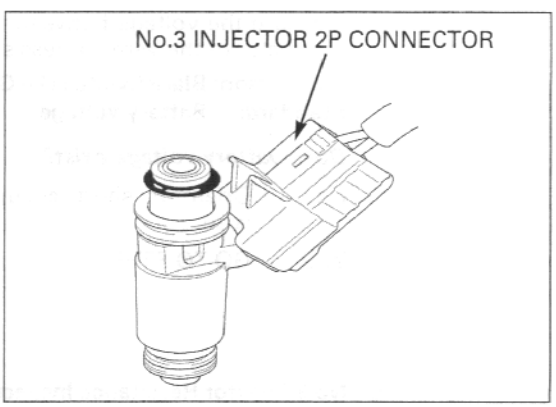

Connect the No.3 injector 2P connector.

Turn the ignition switch ON.
Check that the MIL blinks.

Is the MIL blinking?

NO – Loose or poor contact on the No.3 injector connector.

YES – GO TO STEP 2.

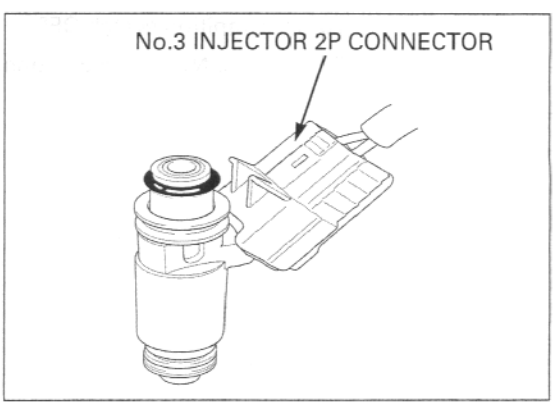

2. **No.3 Injector Resistance Inspection**

Turn the ignition switch OFF.

Disconnect the No.3 injector 2P connector and measure the resistance of the No.3 injector 2P connector terminals.

Connection: Black/white (+) – Pink/green (–)
Standard: 10.5 – 14.5 Ω (20 °C/68 °F)

Is the resistance within 10.5 – 14.5 Ω (20 °C/68 °F)?

NO – Faulty No.3 injector.

YES – GO TO STEP 3.

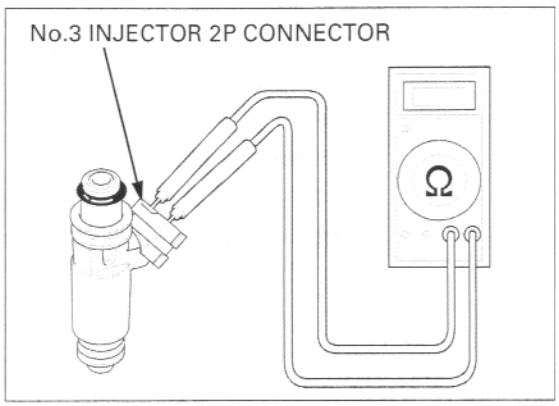

3. **No.3 Injector Short Circuit Inspection**

Check for continuity between the No.3 injector and ground.

Connection: Black/white (+) – Ground (–)

Is there continuity?

YES – Faulty No.3 injector.

NO – GO TO STEP 4.

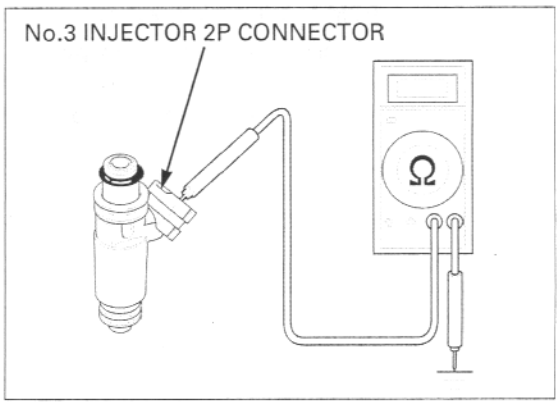

4. **No.3 Injector Power Input Line Inspection**

Turn the ignition switch ON.

Measure the voltage between the No. 3 injector connector of the wire harness side and ground.

Connection: Black/white (+) – Ground (–)
Standard: Battery voltage

Does battery voltage exist?

No – Open or short circuit in Black/white wire.

YES – GO TO STEP 5.

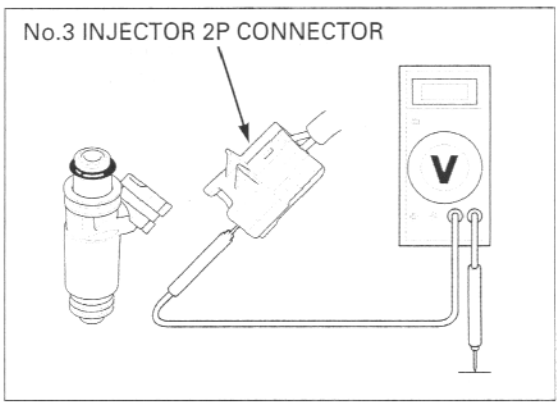

5. **No.3 Injector Resistance Inspection at ECM**

Turn the ignition switch OFF.

Connect the No. 3 injector connector.

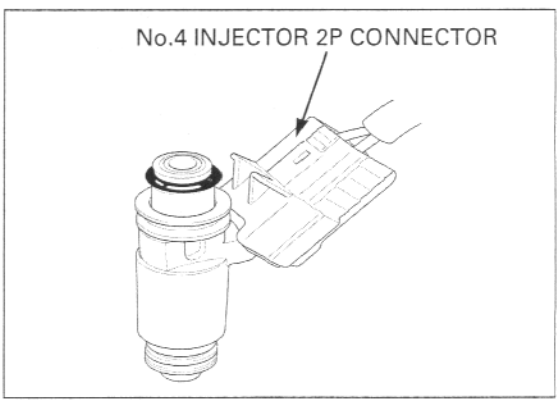

Disconnect the ECM connectors.

Connect the test harness to the wire harness connectors.

Measure the resistance at the test harness terminals.

Connection: A25 (–) – B12 (+)
Standard: 9 – 15 Ω (20 °C/68 °F)

Is the resistance within 9 – 15 Ω (20 °C/68 °F)?

NO – Open or short circuit in Black/white and/or Pink/Green wire.

YES – GO TO STEP 6.

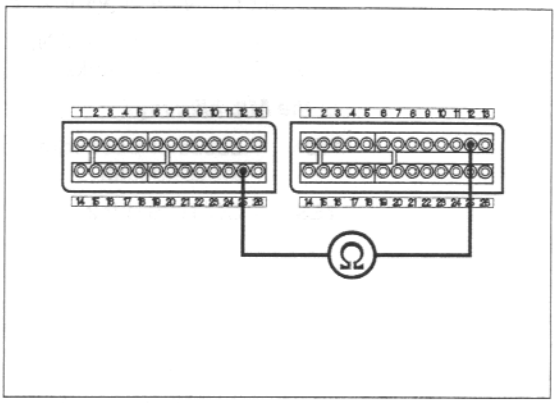

6. **No.3 Injector Control Line Short Circuit Inspection**

Check for continuity between the test harness terminal and ground.

Connection: A25 (+) – Ground (–)

Is there continuity?

YES – Short circuit in Pink/green wire.

NO – Replace the ECM with a new one, and inspect it again.

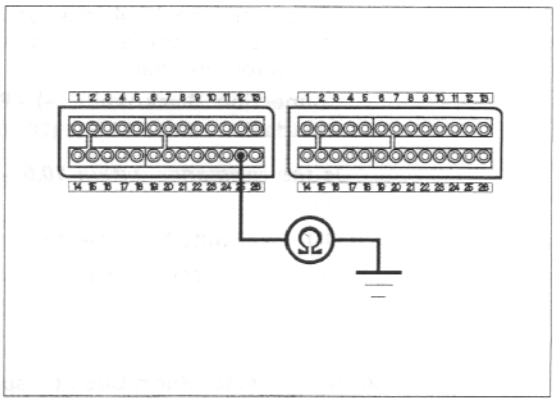

PGM-FI MIL 15 BLINKS (No. 4 INJECTOR)

1. **Injector Connection Inspection**

Turn the ignition switch OFF.

Disconnect the No. 4 injector 2P connector.

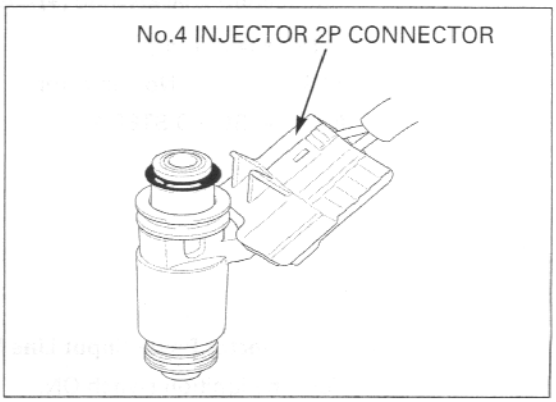

Check for loose or poor contact on the No.4 injector 2P connector.

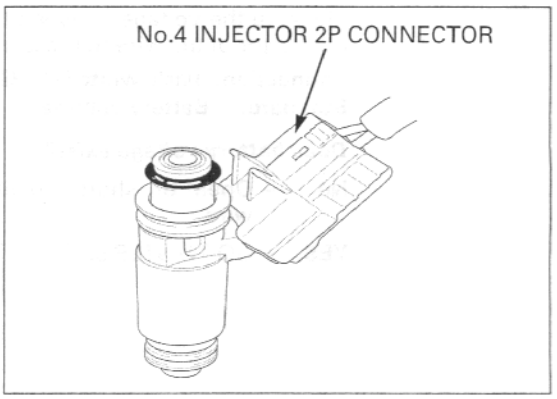

Connect the No.4 injector 2P connector.

Turn the ignition switch ON.
Check that the MIL blinks.

Is the MIL blinking?

NO – Loose or poor contact on the No.4 injector connector.

YES – GO TO STEP 2.

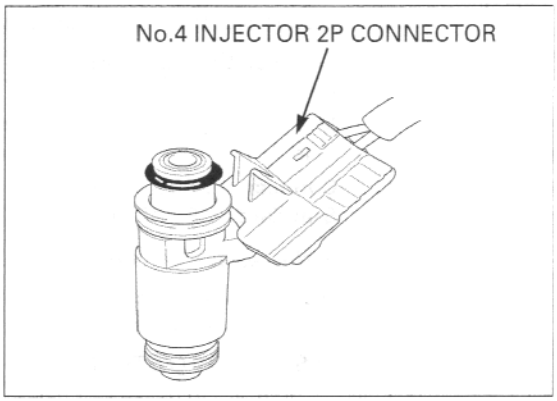

2. No.4 Injector Resistance Inspection

Turn the ignition switch OFF.

Disconnect the No.4 injector 2P connector and measure the resistance of the No.4 injector 2P connector terminals.

Connection: Black/white (+) – Pink/black (–)
Standard: 10.5 – 14.5 Ω (20 °C/68 °F)

Is the resistance within 10.5 – 14.5 Ω (20 °C/68 °F)?

NO – Faulty No.4 injector.

YES – GO TO STEP 3.

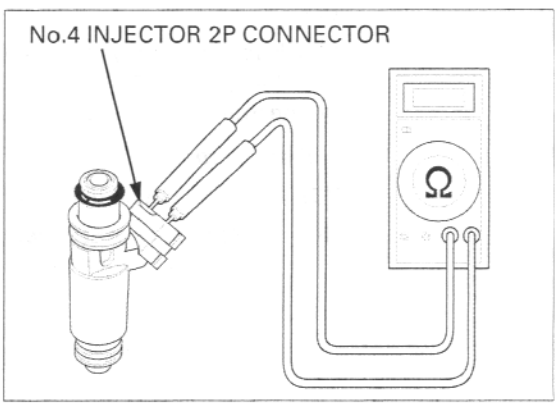

3. No.4 Injector Short Circuit Inspection

Check for continuity between the No.4 injector and ground.

Connection: Black/white (+) – Ground (–)

Is there continuity?

YES – Faulty No.4 injector.

NO – GO TO STEP 4.

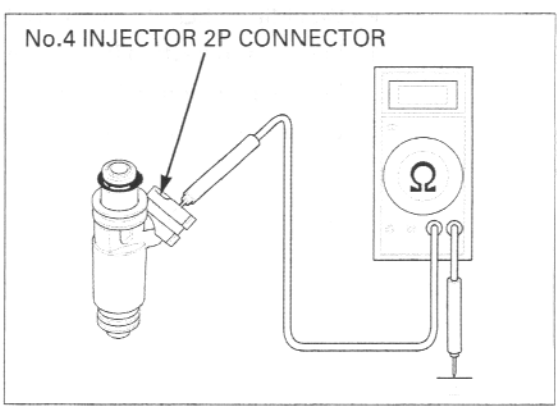

4. No.4 Injector Power Input Line Inspection

Turn the ignition switch ON.

Measure the voltage between the No. 4 injector connector of the wire harness side and ground.

Connection: Black/white (+) – Ground (–)
Standard: Battery voltage

Does battery voltage exist?

No – Open or short circuit in Black/white wire.

YES – GO TO STEP 5.

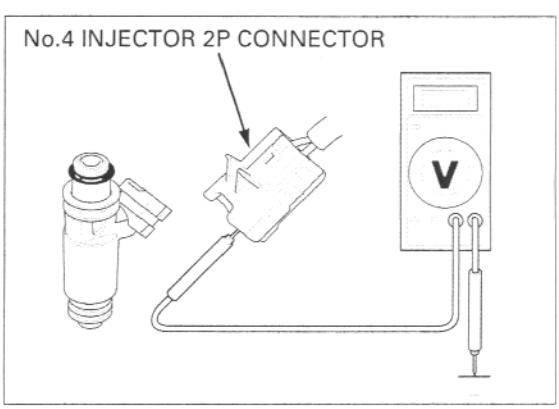

5. No.4 Injector Resistance Inspection at ECM

Turn the ignition switch OFF.

Connect the No. 4 injector connector.

Disconnect the ECM connectors.

Connect the test harness to the wire harness connectors.

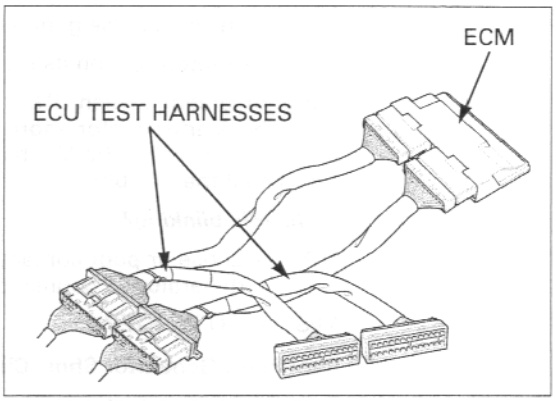

Measure the resistance at the test harness terminals.

Connection: A26 (–) – B12 (+)
Standard: 9 – 15 Ω (20 °C/68 °F)

Is the resistance within 9 – 15 Ω (20 °C/68 °F)?

NO – Open or short circuit in Black/white and/or Pink/black wire.

YES – GO TO STEP 6.

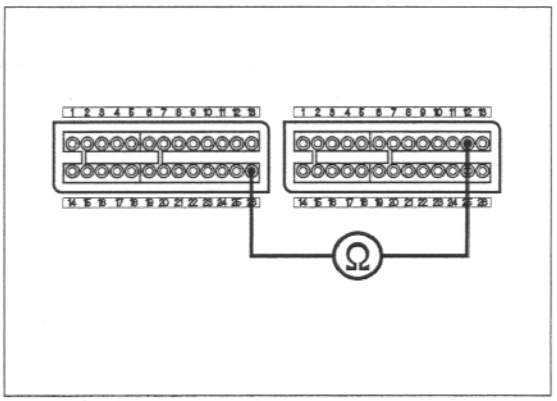

6. No.4 Injector Control Line Short Circuit Inspection

Check for continuity between the test harness terminal and ground.

Connection: A26 (+) – Ground (–)

Is there continuity?

YES – Short circuit in Pink/black wire.

NO – Replace the ECM with a new one, and inspect it again.

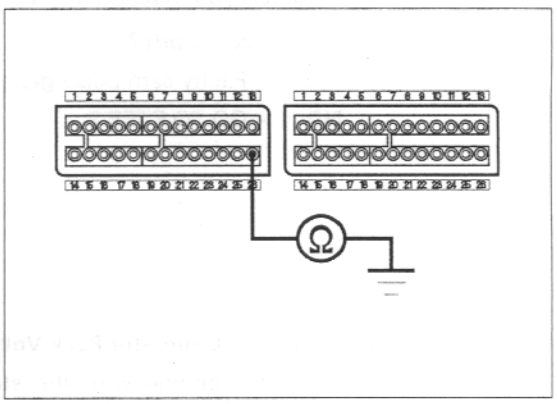

PGM-FI MIL 18 BLINKS (CAM PULSE GENERATOR)

1. Cam Pulse Generator Connection Inspection

Turn the ignition switch OFF.

Disconnect the cam pulse generator 2P connector.

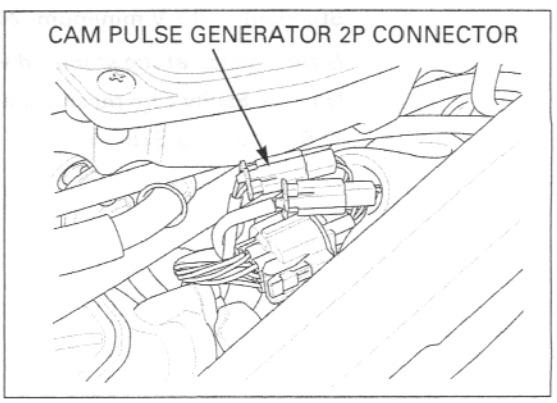

Check for loose or poor contact on the cam pulse generator 2P connector.

Connect the cam pulse generator 2P connector.

Place the motorcycle on its side stand.

Turn the ignition switch ON.
Turn the starter motor more than 10 seconds and then check that the MIL blinks.
Check that the MIL blinks.

Is the MIL blinking?

NO – Loose or poor contact on the cam pulse generator 2P connector.

YES – GO TO STEP 2.

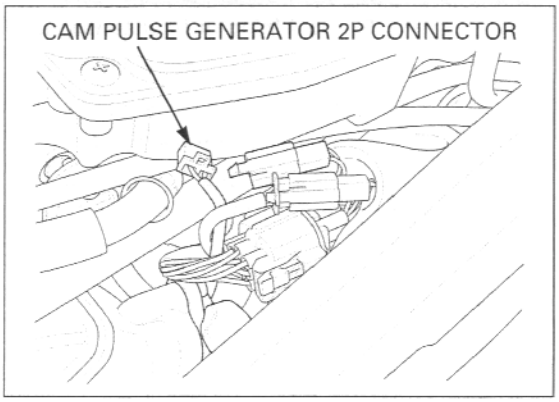

2. Cam Pulse Generator Short Circuit Inspection

Turn the ignition switch OFF and the engine stop switch OFF.

Disconnect the cam pulse generator 2P connector.

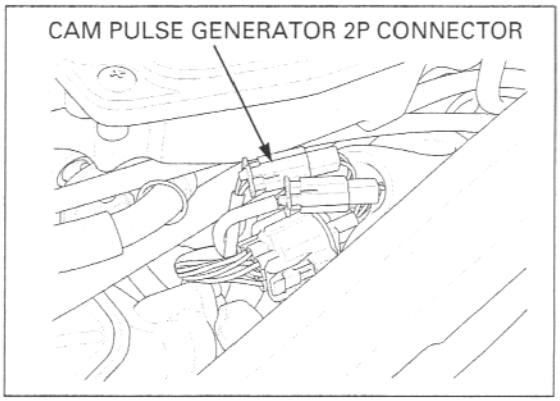

Check the continuity between the cam pulse generator connector terminal and ground.

Connection: White/yellow (+) – Ground (–)

Is there continuity?

YES – Faulty cam pulse generator.

NO – GO TO STEP 3.

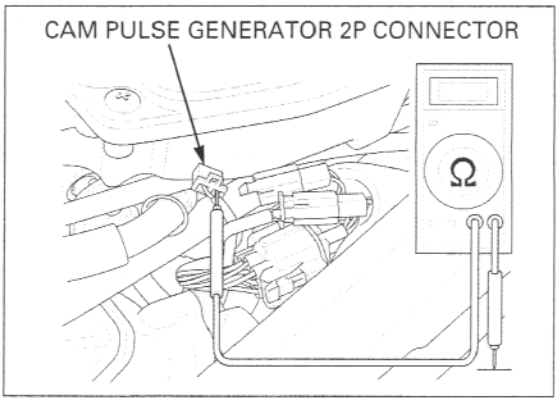

3. Cam Pulse Generator Peak Voltage Inspection

Crank the engine with the starter motor, and measure the cam pulse generator peak voltage at the cam pulse generator 2P connector.

Connection: Gray (+) – White/yellow (–)
Standard: 0.7 V minimum (20 °C/68 °F)

Is the voltage at the standard value?

No – Faulty cam pulse generator.

YES – GO TO STEP 4.

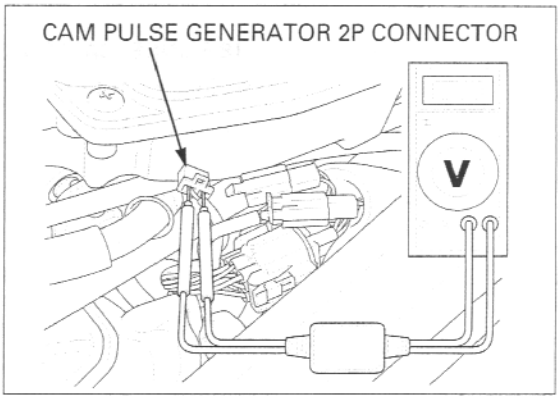

4. Cam Pulse Generator Peak Voltage Inspection at ECM

Turn the ignition switch OFF.

Connect the cam pulse generator 2P connector.

Disconnect the ECM connectors.

Connect the test harness to the wire harness connectors.

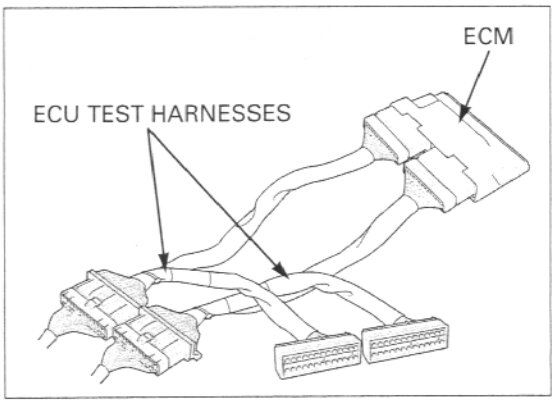

Crank the engine with the starter motor, and measure the cam pulse generator peak voltage at the test harness terminals.

Connection: A14 (+) – ground (–)
Standard: 0.7 V minimum (20 °C/68 °F)

Is the voltage standard value?

NO – Open or short circuit in White/yellow and/or Gray wire.

YES – Replace the ECM with a new one, and inspect it again.

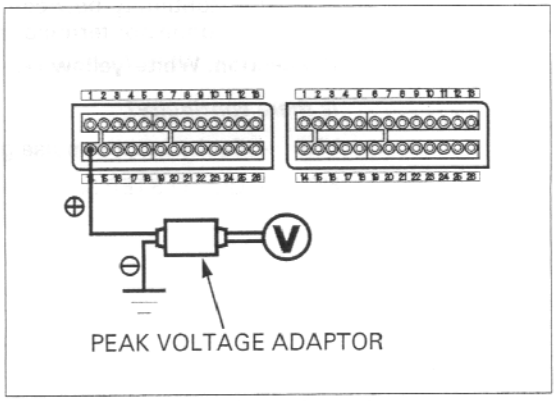

PGM-FI MIL 19 BLINKS (IGNITION PULSE GENERATOR)

1. Ignition Pulse Generator Connection Inspection

Turn the ignition switch OFF.

Disconnect the ignition pulse generator 2P connector.

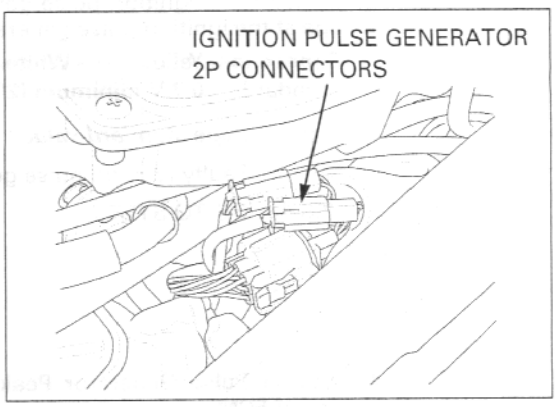

Check for loose or poor contact on the cam pulse generator 2P connector.
Place the motorcycle on its side stand.
Connect the cam pulse generator 2P connector.
Turn the ignition switch ON.
Turn the starter motor more than 10 seconds and then check that the MIL blinks.

Check that the MIL blinks.

Is the MIL blinking?

NO – Loose or poor contact on the cam pulse generator 2P connector.

YES – GO TO STEP 2.

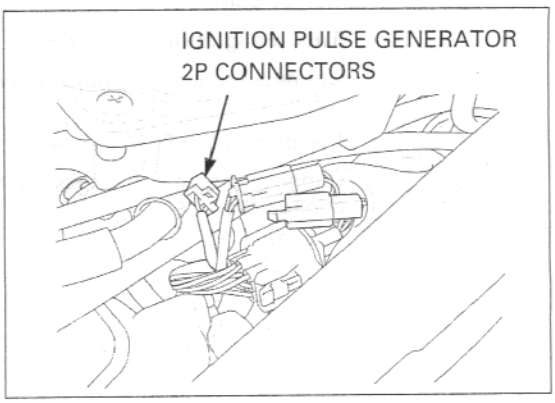

2. **Ignition Pulse Generator Short Circuit Inspection**

Turn the ignition switch OFF and the engine stop switch OFF.
Disconnect the ignition pulse generator 2P connector.

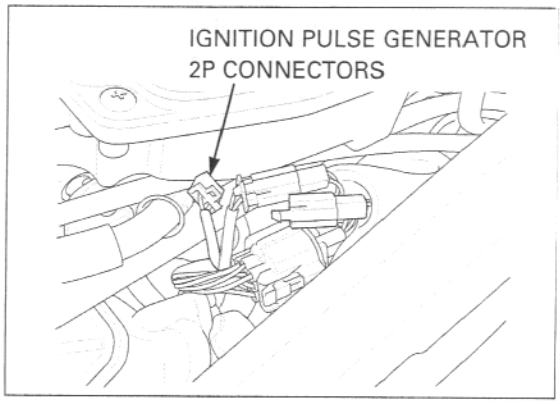

Check the continuity between the ignition pulse generator connector terminal and ground.

Connection: White/yellow (+) – Ground (–)

Is there continuity?

YES – Faulty ignition pulse generator.

NO – GO TO STEP 3.

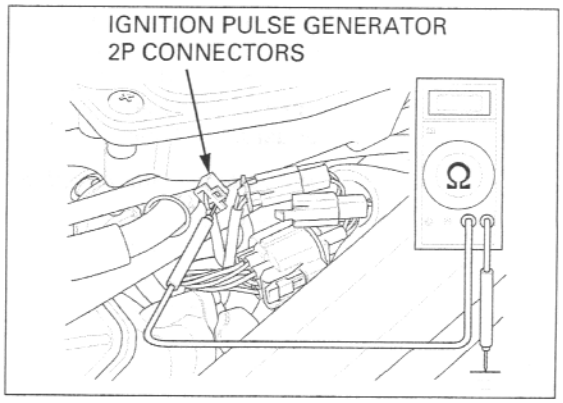

3. **Ignition Pulse Generator Peak Voltage Inspection**

Crank the engine with the starter motor, and measure the ignition pulse generator peak voltage at the ignition pulse generator 2P connector.

Connection: Yellow (+) – White/yellow (–)
Standard: 0.7 V minimum (20 °C/68 °F)

Is the voltage standard value?

No – Faulty ignition pulse generator.

YES – GO TO STEP 4.

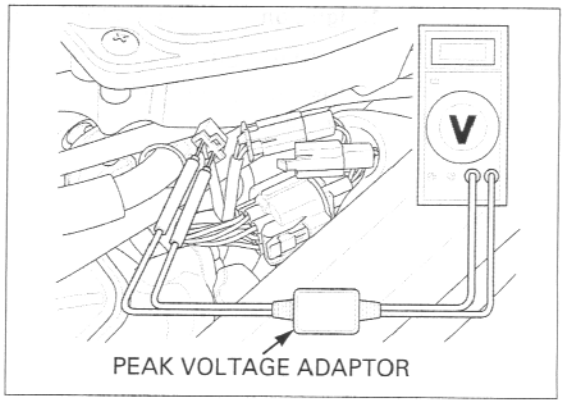

4. **Ignition Pulse Generator Peak Voltage Inspection at ECM**

Turn the ignition switch OFF.

Connect the ignition pulse generator 2P connector.

Disconnect the ECM connectors.

Connect the test harness to the wire harness connectors.

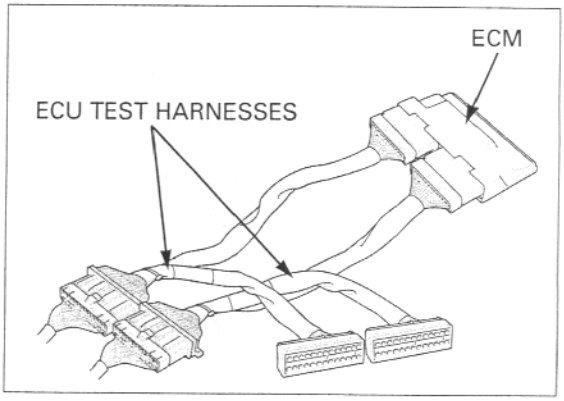

Crank the engine with the starter motor, and measure the ignition pulse generator peak voltage at the test harness terminals.

Connection: A1 (+) – ground (–)
Standard: 0.7 V minimum (20 °C/68 °F)

Is the voltage at the standard value?

NO – Open or short circuit in White/yellow and/or Yellow wire.

YES – Replace the ECM with a new one, and inspect it again.

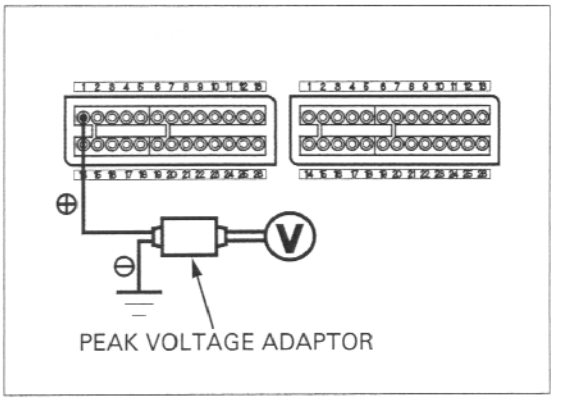

PGM-FI MIL 21 BLINKS (No.1 O_2 SENSOR)

1. No.1 O_2 Sensor Signal Line Inspection

Turn the ignition switch OFF.
Disconnect the No.1 O_2 sensor 4P (Natural) connector.

No.1 O_2 SENSOR 4P (NATURAL) CONNECTOR

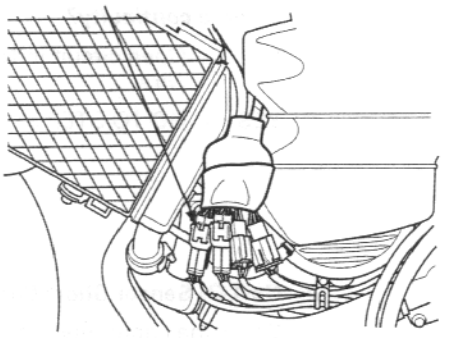

Check for loose or poor contact on the No.1 O_2 sensor 4P (Natural) connector.

No.1 O_2 SENSOR 4P (NATURAL) CONNECTOR

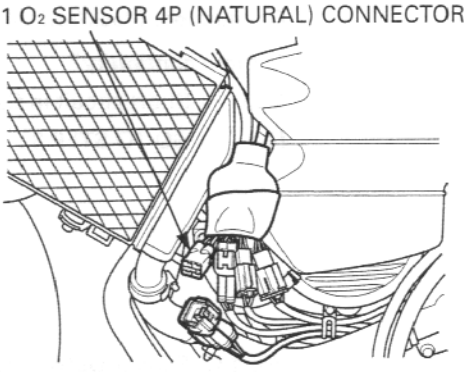

Disconnect the ECM connectors.
Connect the test harness to the wire harness connectors.

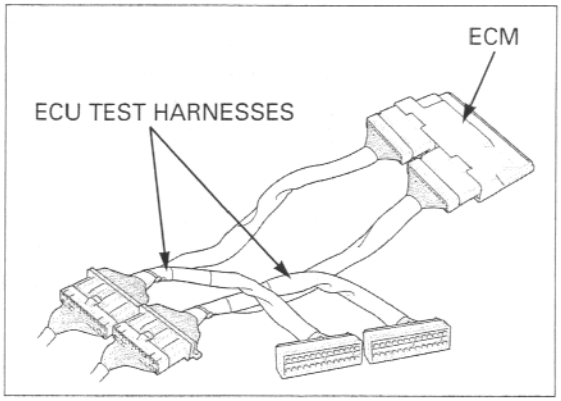

Check the continuity between the test harness terminal and No.1 O_2 sensor 4P (Natural) connector terminal.

Connection: Black/red (+) – A19 (–)

Is there continuity?

NO – Open circuit in No.1 O_2 sensor Black/red wire.

YES – GO TO STEP 2.

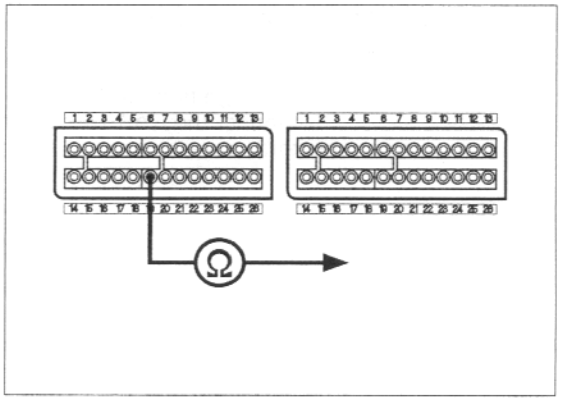

2. No.1 O_2 Sensor Short Circuit Inspection

Check the continuity between the No.1 O_2 sensor 4P (Natural) connector terminal and ground.

Connection: Black/red (+) – Ground (–)

Is there continuity?

YES – Short circuit in O_2 sensor Black/red wire.

NO – GO TO STEP 3.

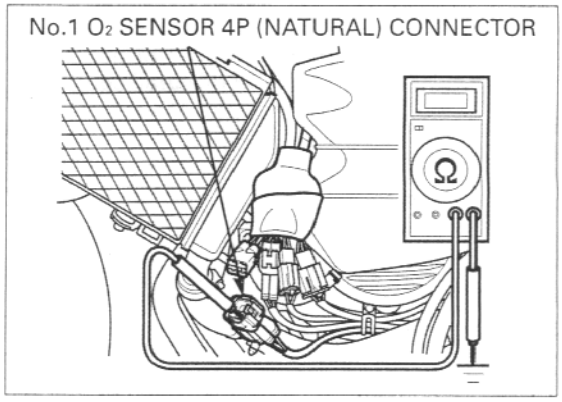

3. No.1 O_2 Sensor Output Voltage Inspection

Connect the No.1 O_2 sensor 4P (Natural) connector.

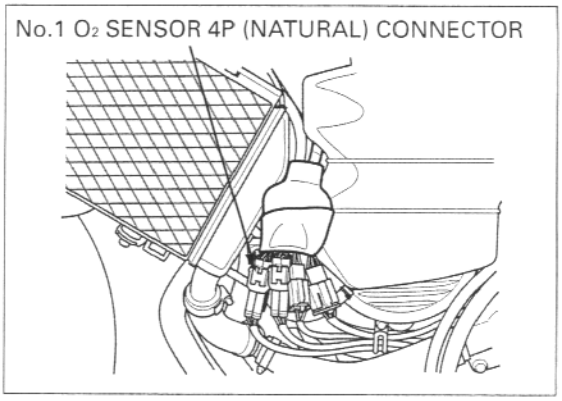

Turn the ignition switch ON and warm up the engine up to coolant temperature is 80 °C (176 °F).
Operate the throttle grip and snap the engine speed from idle to 5,000 rpm.

Check the voltage between the test harness terminals.

Connection: A19 (+) – B16 (–)
Standard:
With the throttle open:
0.6 V minimum
With the throttle quickly closed:
0.4 V minimum

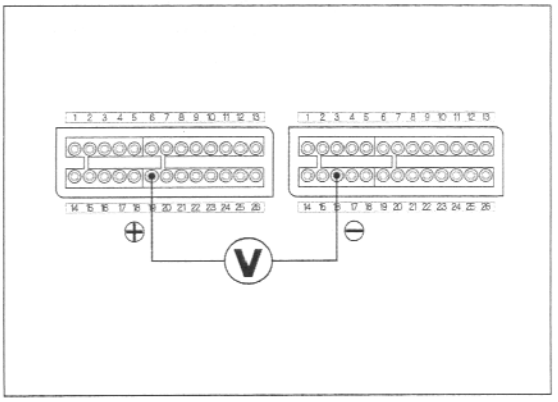

Is the voltage within the standard values?

NO – Faulty No.1 O_2 sensor.

YES – Check the fuel supply system, if the system is correct, replace the ECM with a new one, and inspect it again.

PGM-FI MIL 22 BLINKS (No.2 O_2 SENSOR)

1. No.2 O_2 Sensor Signal Line Inspection

Turn the ignition switch OFF.

Disconnect the No.2 O_2 sensor 4P (Black) connector.

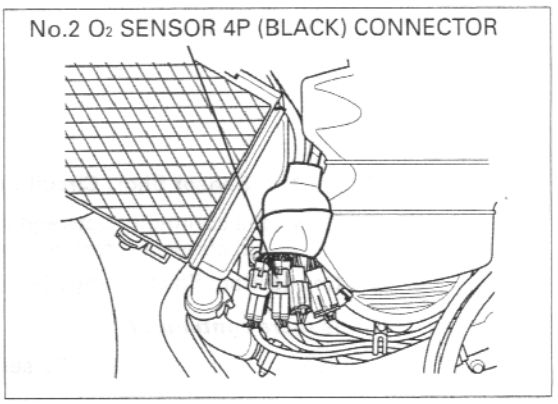

Check for loose or poor contact on the O_2 sensor 4P (Black) connector.

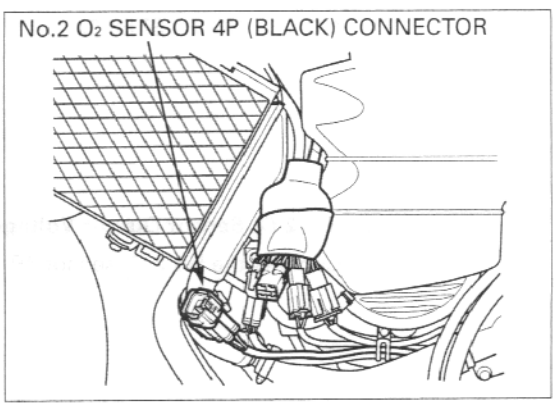

Disconnect the ECM connectors.
Connect the test harness to the wire harness connectors.

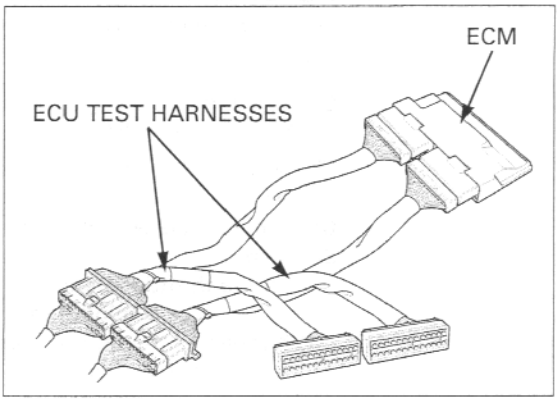

Check the continuity between the test harness terminal and No.2 O_2 sensor connector terminal.

Connection: Black/orange (+) – A19 (–)

Is there continuity?

NO – Open circuit in No.2 O_2 sensor Black/orange wire.

YES – GO TO STEP 2.

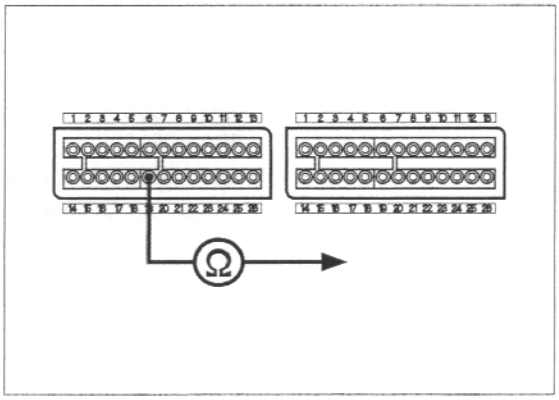

2. No.1 O_2 Sensor Short Circuit Inspection

Check the continuity between the No.2 O_2 sensor 4P (Black) connector terminal and ground.

Connection: Black/orange (+) – Ground (–)

Is there continuity?

YES – Short circuit in O_2 sensor Black/orange wire.

NO – GO TO STEP 3.

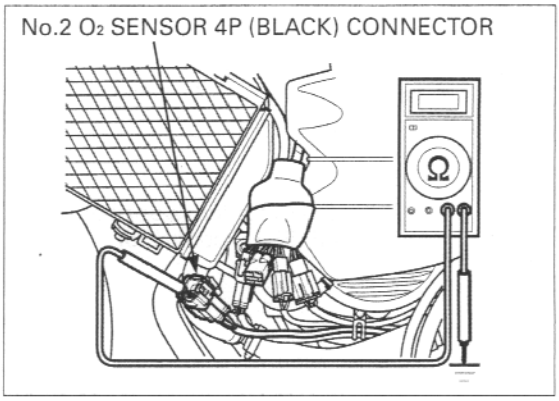

3. No.2 O_2 Sensor Output Voltage Inspection

Connect the No.2 O_2 sensor 4P (Black) connector.

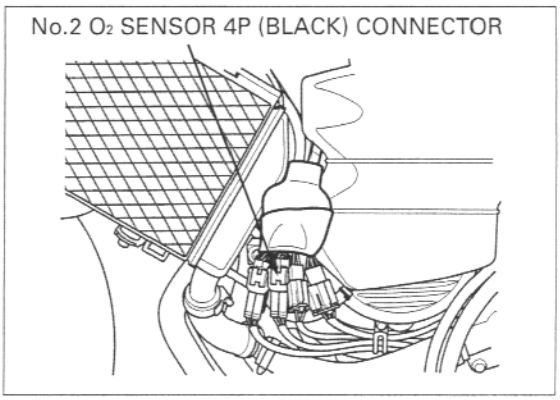

Turn the ignition switch ON and warm up the engine up to coolant temperature is 80 °C (176 °F).

Operate the throttle grip and snap the engine speed from idle to 5,000 rpm.

Check the voltage between the test harness terminals.

Connection: A6 (+) – B16 (–)
Standard:
With the throttle open:
0.6 V minimum
With the throttle quickly closed:
0.4 V minimum

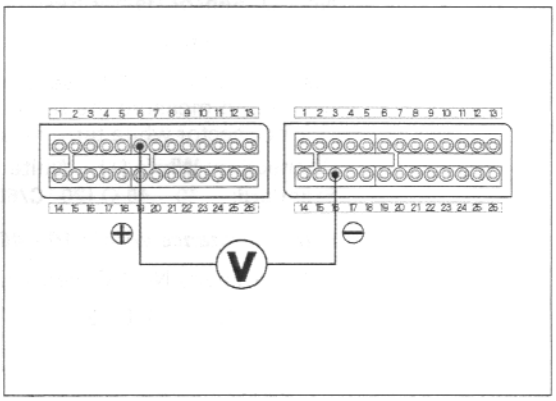

Is the voltage within the standard values?

NO – Faulty No.2 O_2 sensor.

YES – Check the fuel supply system, if the system is correct, replace the ECM with a new one, and inspect it again.

PGM-FI MIL 23 BLINKS (No.1 O_2 SENSOR HEATER)

1. No.1 O_2 Sensor Connection Inspection

Turn the ignition switch OFF.
Disconnect the No.1 O_2 sensor 4P (Natural) connectors.

No.1 O_2 SENSOR 4P (NATURAL) CONNECTOR

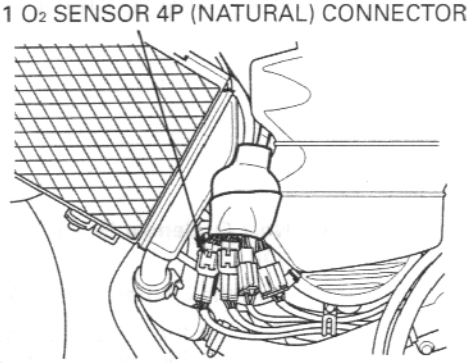

Check for loose or poor contact on the No.1 O_2 sensor 4P (Natural) connector.

Connect the No.1 O_2 sensor 4P (Natural) connector.

Place the motorcycle on its side stand.

Check that the MIL blinks.

Start the engine and check that the MIL blinks.

Is the MIL blinking?

NO – Loose or poor contact on the No.1 O_2 sensor connector.

YES – GO TO STEP 2.

No.1 O_2 SENSOR 4P (NATURAL) CONNECTOR

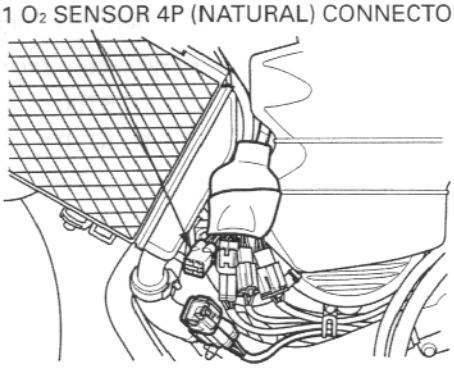

2. **No.1 O_2 Sensor Heater Resistance Inspection**

Turn the ignition switch OFF.

Disconnect the No.1 O_2 sensor 4P (Natural) connector and measure the resistance at the sensor side connector white terminals.

Connection: White (+) – White (–)
Standard: 10 – 40 Ω (20 °C/68 °F)

Is the resistance within 10 – 40 Ω (20 °C/68 °F)?

NO – Faulty No.1 O_2 sensor.

YES – GO TO STEP 3.

No.1 O_2 SENSOR 4P (NATURAL) CONNECTOR

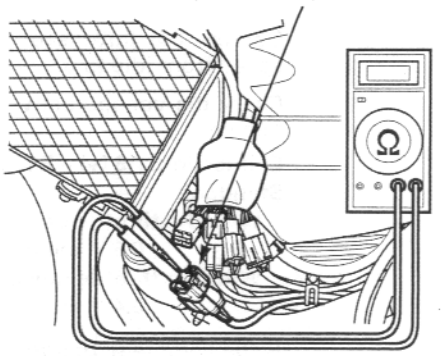

3. **No.1 O_2 Sensor Heater Short Circuit Inspection**

Check for continuity between the white terminal and ground.

Connection: White (+) – Ground (–)

Is there continuity?

YES – Faulty No.1 O_2 sensor.

NO – GO TO STEP 4.

O_2 SENSOR 4P (NATURAL) CONNECTOR

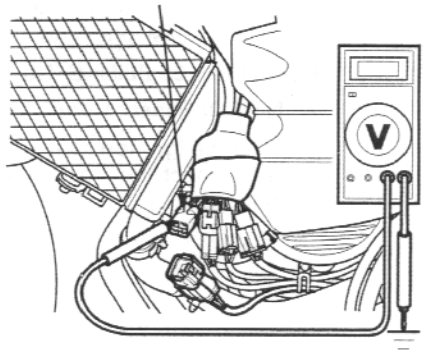

4. **No.1 O_2 Sensor Heater Power Input Line Inspection**

Turn the ignition switch ON.

Measure the voltage at the No.1 O_2 sensor wire harness side connector terminals.

Connection: Black/white (+) – White (–)
Standard: Battery voltage

Does battery voltage exist?

NO – GO TO STEP 6.

YES – GO TO STEP 5.

O_2 SENSOR 4P (NATURAL) CONNECTOR

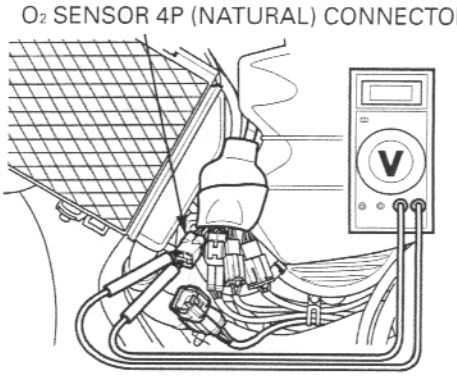

5. **No.1 O_2 Sensor Heater Power Input Line Short Circuit Inspection**

Turn the ignition switch OFF.
Disconnect the ECM 26P connectors.

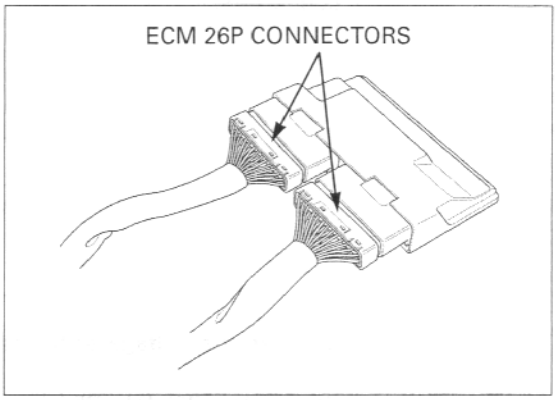

Turn the ignition switch ON.

Measure the voltage at the No.1 O_2 sensor wire harness side connector terminals.

Connection: Black/white (+) – White (–)

Does battery voltage exist?

YES – Open circuit in No.1 O_2 sensor White wires.

NO – Replace the ECM with a new one, and inspect again.

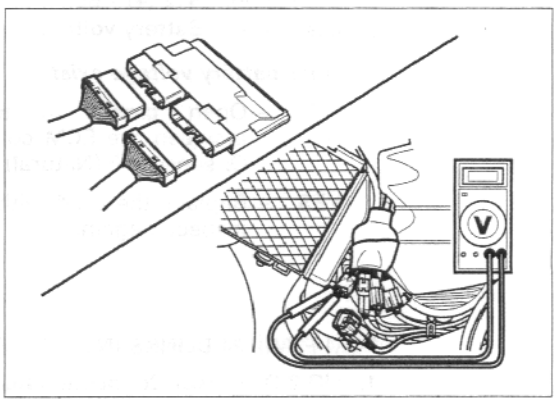

6. **No.1 O_2 Sensor Heater Power Input Voltage Inspection**

Measure the voltage at the O_2 sensor wire harness side connector terminal and ground.

Connection: Black/white (+) – Ground (–)
Standard: Battery voltage

Does battery voltage exist?

NO – Open circuit in Black/white wire between the No.1 O_2 sensor and engine stop relay.

YES – GO TO STEP 7.

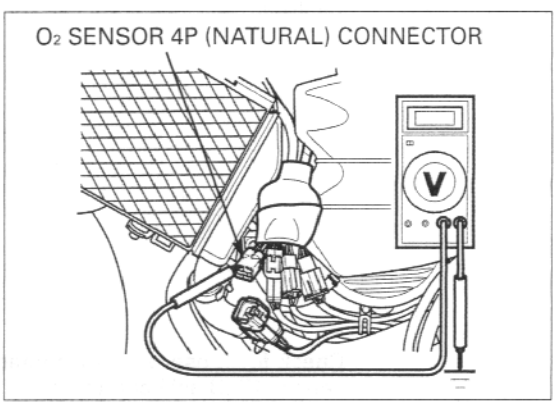

7. **No.1 O_2 Sensor Heater Power Input Voltage Inspection at ECM**

Turn the ignition switch OFF.

Connect the No.1 O_2 sensor 4P (Natural) connector.

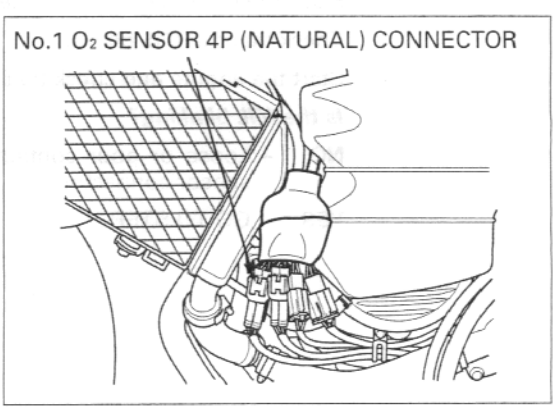

Disconnect the ECM connectors.

Connect the test harness to the wire harness connectors.

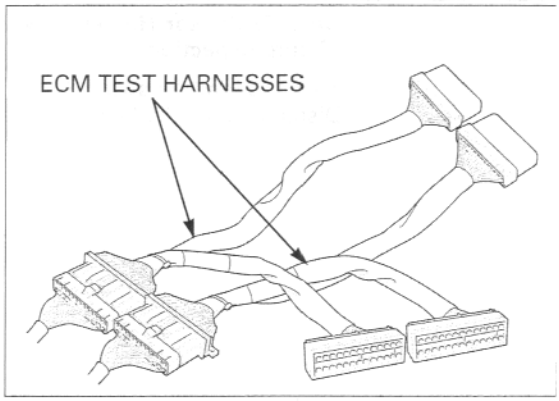

Measure the voltage at the test harness terminals.

Connection: B12 (+) – B5 (–)
Standard: Battery voltage

Does battery voltage exist?

NO – Open circuit in Black/white wire between the ECM connector and No.1 O_2 sensor 4P (Natural) connector.

YES – Replace the ECM with a new one, and inspect it again.

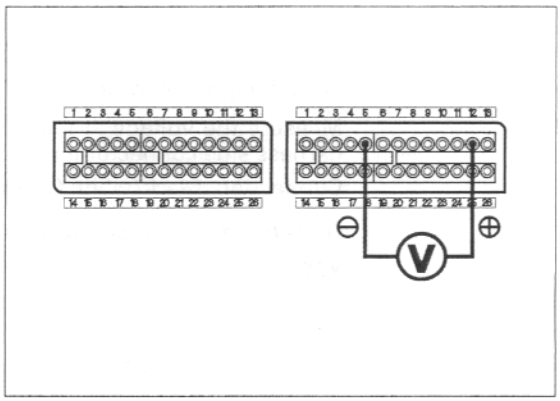

PGM-FI MIL 24 BLINKS (No.2 O_2 SENSOR HEATER)

1. NO.2 O_2 Sensor Connection Inspection

Turn the ignition switch OFF.
Disconnect the No.2 O_2 sensor 4P (Black) connectors.

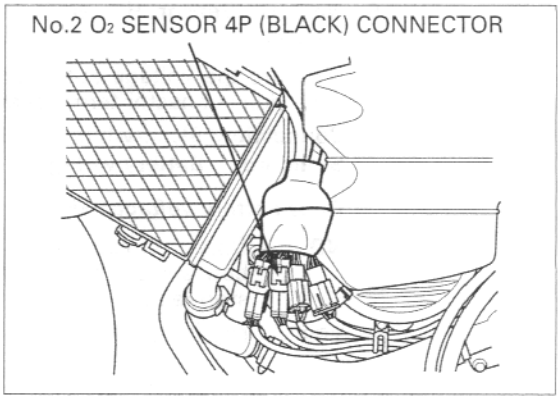

Check for loose or poor contact on the No.2 O_2 sensor 4P (Black) connector.

Connect the No.2 O_2 sensor 4P (Black) connector.

Place the motorcycle on its side stand.

Check that the MIL blinks.

Start the engine and check that the MIL blinks.

Is the MIL blinking?

NO – Loose or poor contact on the No.2 O_2 sensor connector.

YES – GO TO STEP 2.

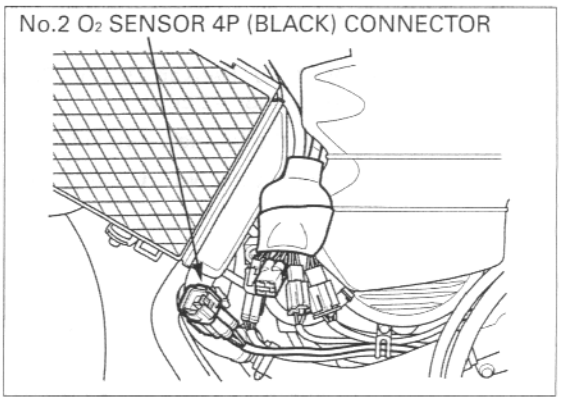

2. **No.2 O_2 Sensor Heater Resistance Inspection**

Turn the ignition switch OFF.

Disconnect the No.2 O_2 sensor 4P (Black) connector and measure the resistance at the sensor side connector white terminals.

Connection: White (+) – White (–)
Standard: 10 – 40 Ω (20 °C/68 °F)

Is the resistance within 10 – 40 Ω (20 °C/68 °F)?

NO – Faulty No.2 O_2 sensor.

YES – GO TO STEP 3.

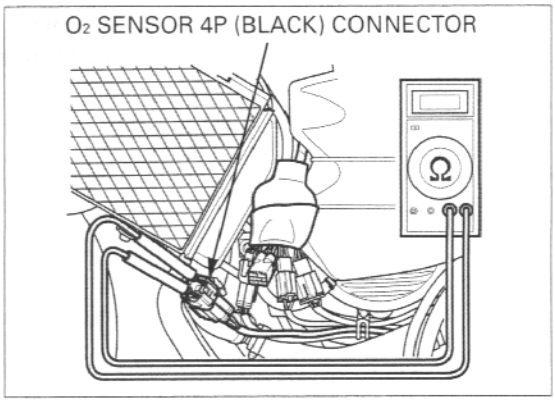

3. **No.2 O_2 Sensor Heater Short Circuit Inspection**

Check for continuity between the white terminal and ground.

Connection: White (+) – Ground (–)

Is there continuity?

YES – Faulty No.2 O_2 sensor.

NO – GO TO STEP 4.

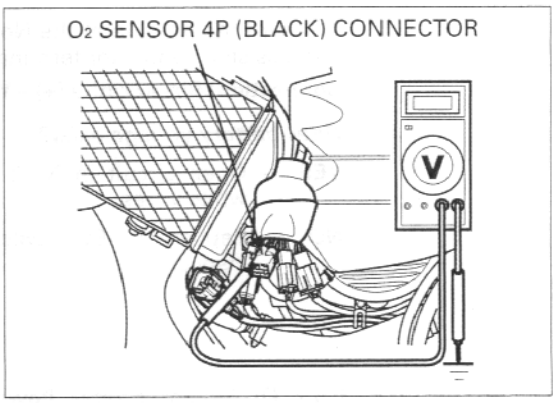

4. **No.2 O_2 Sensor Heater Power Input Line Inspection**

Turn the ignition switch ON.

Measure the voltage at the No.1 O_2 sensor wire harness side connector terminals.

Connection: Black/white (+) – White/yellow (–)
Standard: Battery voltage

Does battery voltage exist?

NO – GO TO STEP 6.

YES – GO TO STEP 5.

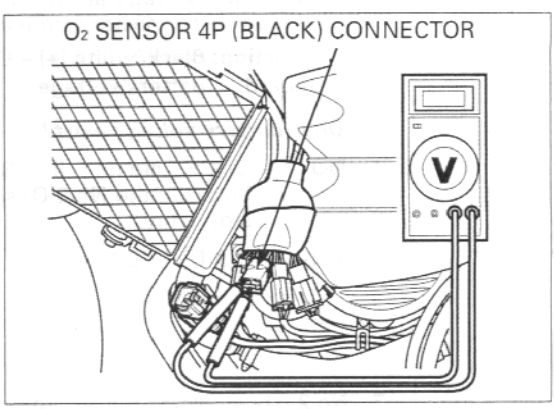

5. **No.2 O_2 Sensor Heater Power Input Line Short Circuit Inspection**

Turn the ignition switch OFF.
Disconnect the ECM 26P connectors.

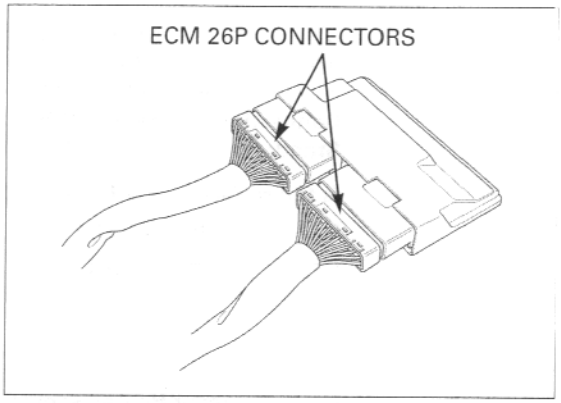

Turn the ignition switch ON.

Measure the voltage at the No.2 O_2 sensor wire harness side connector terminals.

Connection: Black/white (+) – White/yellow (–)

Does battery voltage exist?

YES – Open circuit in No.2 O_2 sensor Black/white wires.

NO – Replace the ECM with a new one, and inspect again.

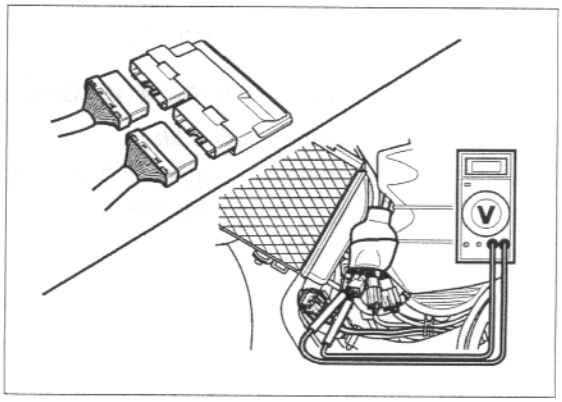

6. **No.2 O_2 Sensor Heater Power Input Voltage Inspection**

Measure the voltage at the No.2 O_2 sensor wire harness side connector terminal and ground.

Connection: Black/white (+) – Ground (–)
Standard: Battery voltage

Does battery voltage exist?

NO – Open circuit in Black/white wire between the No.2 O_2 sensor and engine stop relay.

YES – GO TO STEP 7.

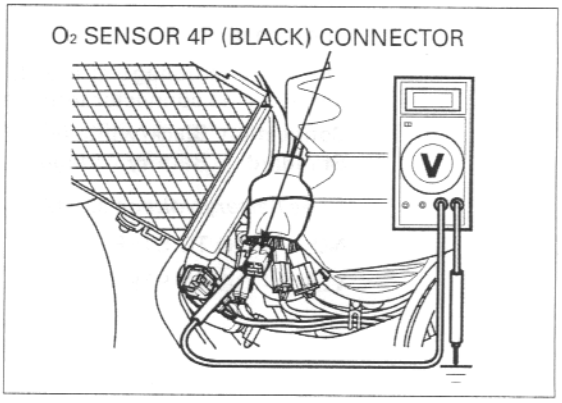

7. **No.2 O_2 Sensor Heater Power Input Voltage Inspection at ECM**

Turn the ignition switch OFF.

Connect the No.2 O_2 sensor 4P (Black) connector.

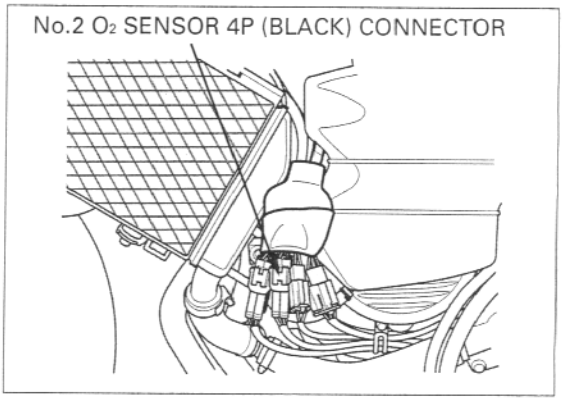

Disconnect the ECM connectors.

Connect the test harness to the wire harness connectors.

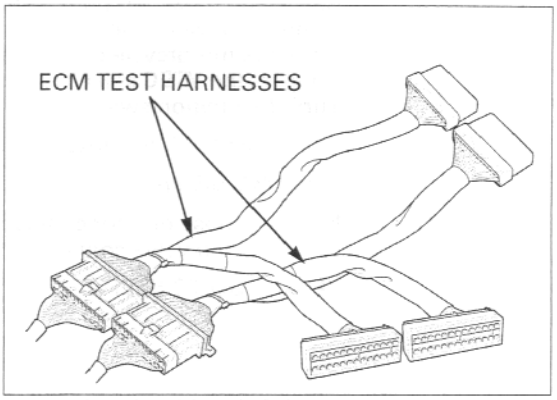

Measure the voltage at the test harness terminals.

Connection: B12 (+) – B4 (–)
Standard: Battery voltage

Is the battery voltage exist?

NO – Open circuit in Black/white wire between the ECM connector and No.2 O_2 sensor 4P (Black) connector.

YES – Replace the ECM with a new one, and inspect it again.

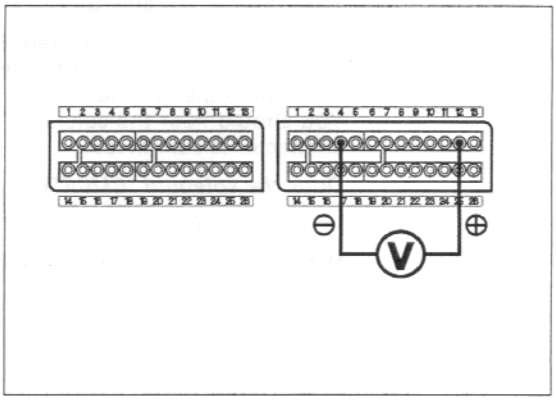

PGM-FI MIL 27 BLINKS (VTEC solenoid valve)

1. VTEC Solenoid Valve Connection Inspection

Turn the ignition switch OFF.

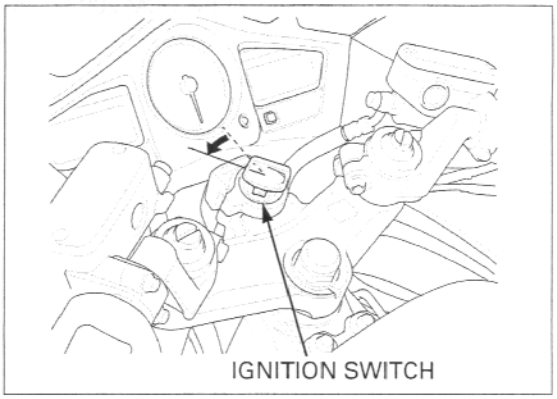

Disconnect the VTEC solenoid valve connector.

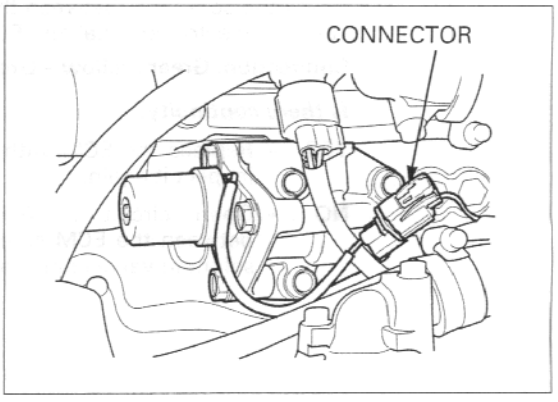

Check for loose or poor contact on the VTEC solenoid valve connector.
Place the motorcycle on its side stand.
Connect the VTEC solenoid connector.
Turn the ignition switch ON.

Check that the MIL blinks.

Is the MIL blinking?

NO – Loose or poor contact on the VTEC solenoid valve connector.

YES – GO TO STEP 2.

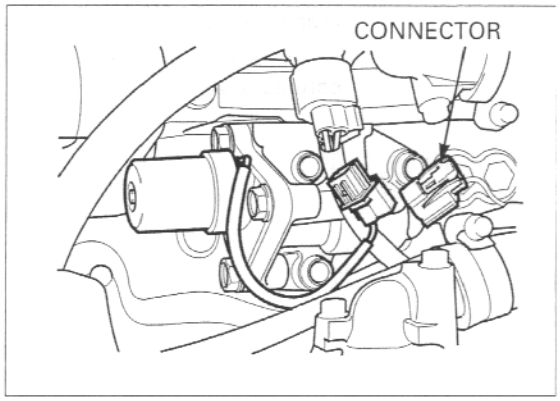

2. VTEC Solenoid Valve Unit Inspection

Connect the battery (+) terminal to the VTEC solenoid valve connector terminal and battery (-) terminal to the ground.
You should hear the solenoid "CLICK" when the connector is connected.

Does the solenoid "CLICK"?.

YES – GO TO STEP 3.

NO – Replace the VTEC solenoid valve.

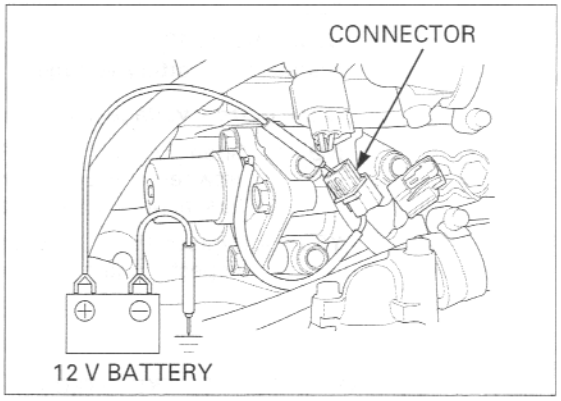

3. VTEC Solenoid Valve Open Circuit Inspection

Disconnect the ECM 26P (Light gray) connector.

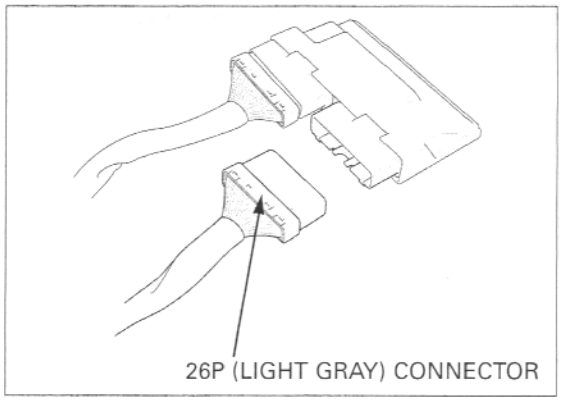

Check the continuity between the VTEC solenoid valve connector terminal and ECM connector.

Connection: Green/yellow – Green/yellow

Is there continuity?

YES – Replace the ECM with a new one, and inspect it again.

NO – Open circuit in Green/yellow wire between the ECM connector and VTEC solenoid valve connector.

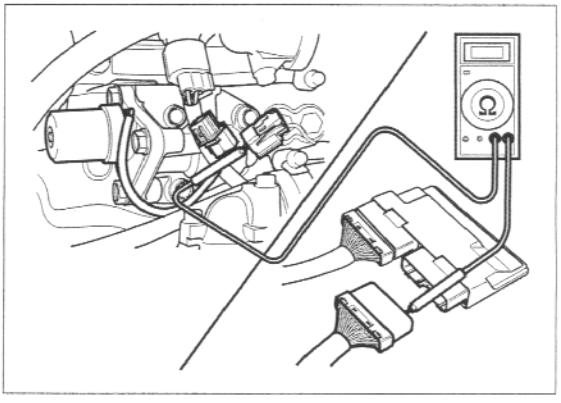

PGM-FI MIL 33 BLINKS (E^2-PROM)

1. ECM Connectors Connection Inspection

Turn the ignition switch OFF.
Disconnect the ECM connectors.

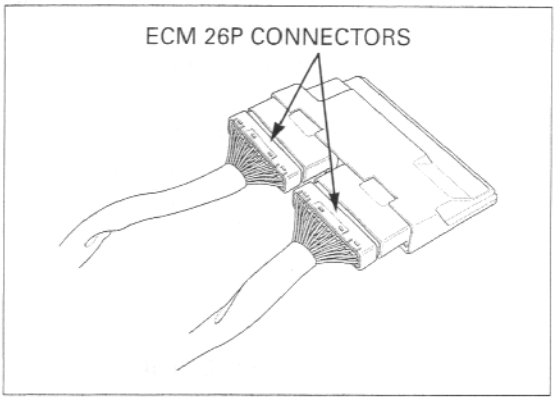

Check for loose or poor contact on the ECM connectors.
Connect the ECM connectors.
Short the service check connector with a jumper wire (page 5-7).
Turn the ignition switch ON and check that the MIL blinks.
Start the engine and check that the MIL blinks.

Is the MIL blinking 33 times?

YES – GO TO STEP 2.

NO – GO TO STEP 3.

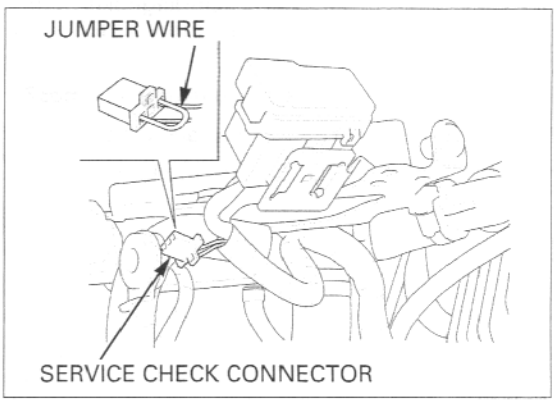

2. Recheck MIL Brinks

Reset the self-diagnosis memory data (page 5-8).
Turn the ignition switch ON and check that the MIL blinks.

Is the MIL blinking 33 times?

YES – Replace the ECM.

NO – GO TO STEP 3.

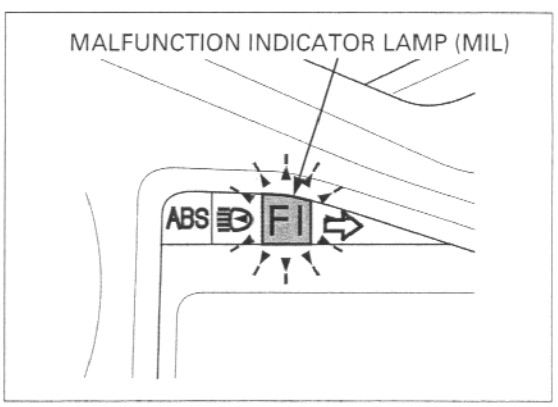

3. Recheck MIL Brinks

Remove the jumper wire from the service check connector (page 5-7).

Turn the ignition switch ON and check that the MIL blinks.

Is the MIL blinking 33 times?

NO – No problem.

YES – GO TO STEP 4.

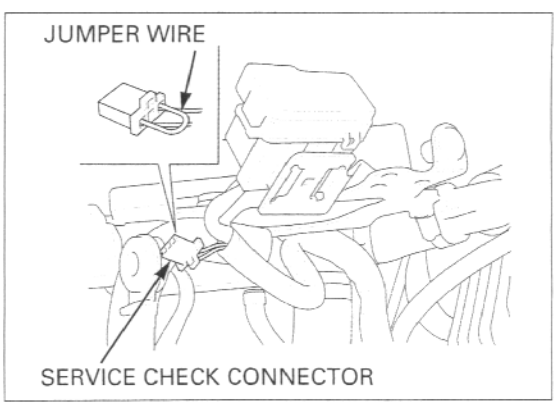

4. **Recheck MIL Brinks**

Turn the ignition switch OFF.

Short the service check connector with a jumper wire (page 5-7).

Turn the ignition switch ON and check that the MIL blinks.

Is the MIL blinking 33 times?

NO – No problem.

YES – GO TO STEP 5.

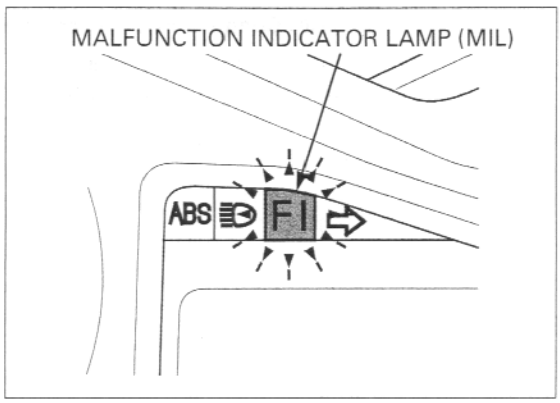

5. **Recheck MIL Brinks**

Reset the self-diagnosis memory data (page 5-8). Turn the ignition switch ON and check that the MIL blinks.

Is the MIL blinking 33 times?

YES – Replace the ECM.

NO – No problem.

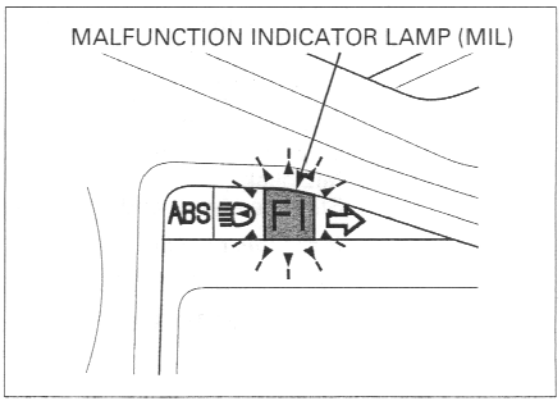

FUEL LINE INSPECTION

FUEL PRESSURE INSPECTION

NOTICE

- *Before disconnecting the fuel hoses, release the fuel pressure by loosening the fuel feed hose banjo bolt at the fuel tank.*
- *Always replace the sealing washers when the fuel feed hose banjo bolt is removed or loosened.*

Remove the seat (page 2-5).
Remove the trim clips and right seat rail cover (page 15-8).

Disconnect the battery negative cable from the battery terminal.

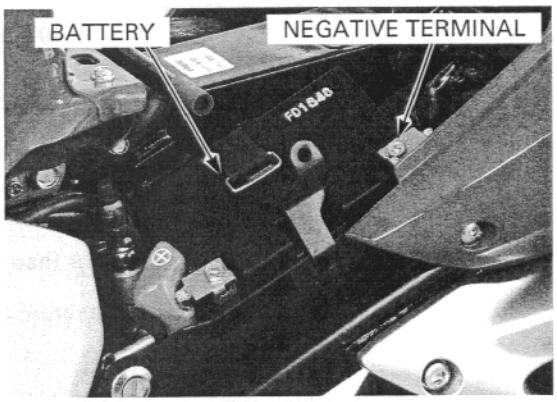

Remove the air cleaner housing (page 5-60).

Disconnect the pressure regulator vacuum hose and plug the vacuum hose.

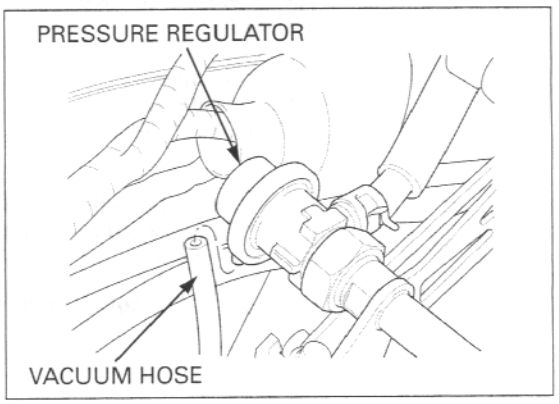

Cover the fuel feed hose banjo bolt with a rag or shop towel.

Slowly loosen the banjo bolt and catch the remaining fuel using a approved gasoline container.

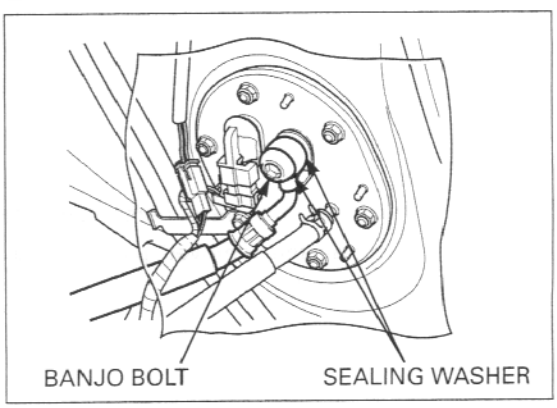

Remove the fuel feed hose banjo bolt and attach the fuel pressure gauge with the following Honda Genuine parts.

Banjo bolt, 12 mm
Part No. 90008-PP4-E02
Sealing washer, 12 mm
Part No. 90428-PD6-003
Sealing washer, 6 mm
Part No. 90430-PD6-003

TOOL:
Fuel pressure gauge **07406–0040003 or 07406–0040002**

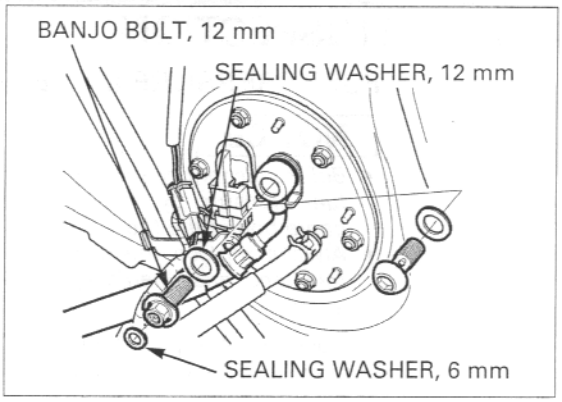

Connect the battery negative cable.
Start the engine.
Read the fuel pressure at idle speed.

IDLE SPEED: 1,200 ± 100 rpm
STANDARD: 250 kPa (2.5 kgf/cm², 36 psi)

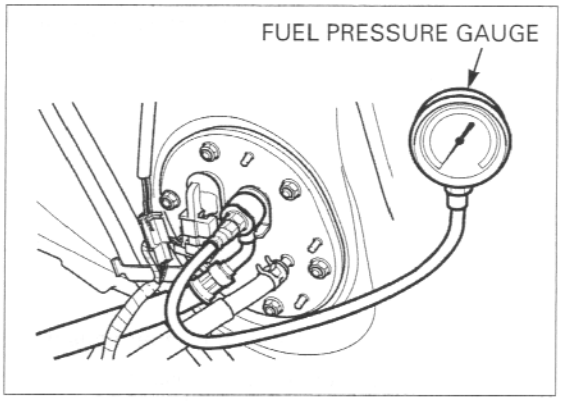

If the fuel pressure is higher than specified, inspect the following:
- Pinched or clogged fuel return hose
- Pressure regulator
- Fuel pump (page 5-54)

If the fuel pressure is lower than specified, inspect the following:
- Fuel line leaking
- Clogged fuel filter
- Pressure regulator
- Fuel pump (page 5-54)

Always replace the sealing washer when the fuel feed hose banjo bolt is removed or loosened.

After inspection, remove the banjo bolt and reinstall and tighten the fuel feed hose banjo bolt using the new sealing washers.

TORQUE: 22 N·m (2.2 kgf·m, 16 lbf·ft)

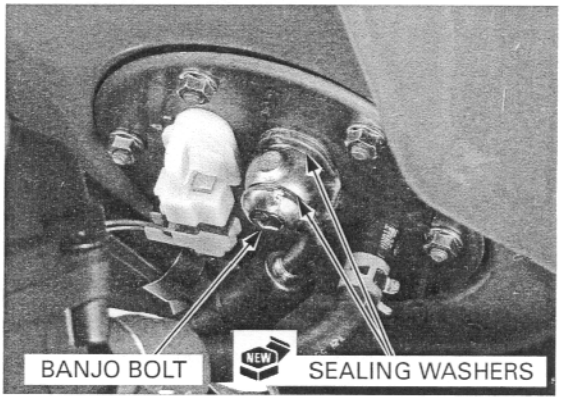

Connect the pressure regulator vacuum hose.

Install the removed parts in the reverse order of removal.

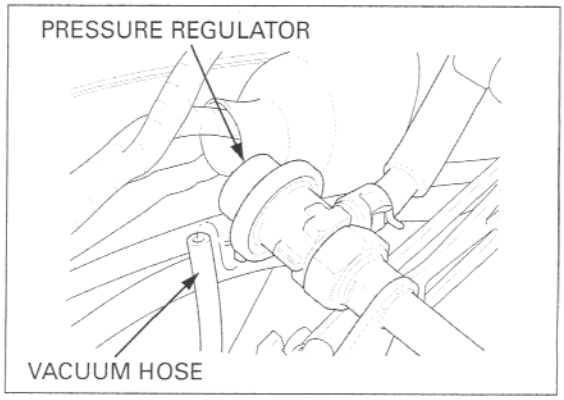

FUEL FLOW INSPECTION

Remove the upper cowl (page 2-12).
Open and support the fuel tank using the equipped tools (page 3-5).

Disconnect the fuel cut-off relay connector.

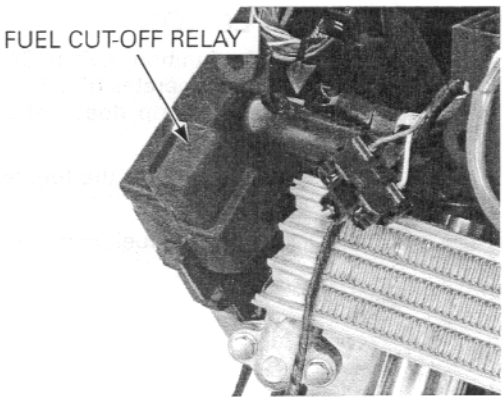

Jump the Brown and Black/white wire terminals of the wire harness side using a jumper wire.

- When the fuel return hose is disconnected, gasoline will spill out from the hose. Place a approved gasoline container and drain the gasoline.
- Wipe off spilled out gasoline.

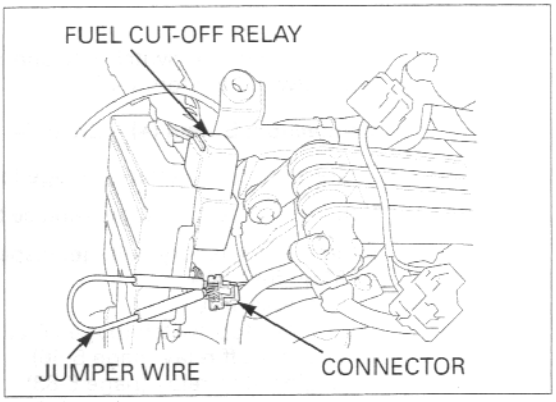

Disconnect the fuel return hose at the fuel tank, plug the fuel tank inlet joint.

Turn the ignition switch ON for 10 seconds.
Measure the amount of fuel flow.

Amount of fuel flow:
150 cm³ (5.0 US oz, 5.3 Imp oz) minimum /10 seconds at 12 V

If the fuel flow is less than specified, inspect the following:
- Pinched or clogged fuel hose and fuel return hose
- Clogged fuel filter
- Pressure regulator
- Fuel pump (page 5-54)

After inspection, connect the fuel return hose.
Start the engine and check for leak.

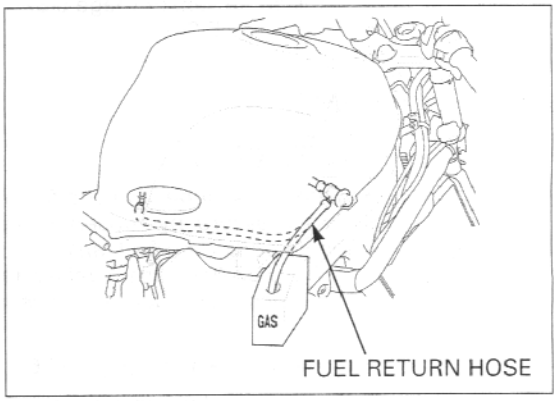



FUEL PUMP

INSPECTION

Turn the ignition switch ON and confirm that the fuel pump operates for a few seconds.
If the fuel pump does not operate, inspect as follows:

Open and support the fuel tank using the equipped tools (page 3-5).

Disconnect the fuel pump 2P (Brown) connector.

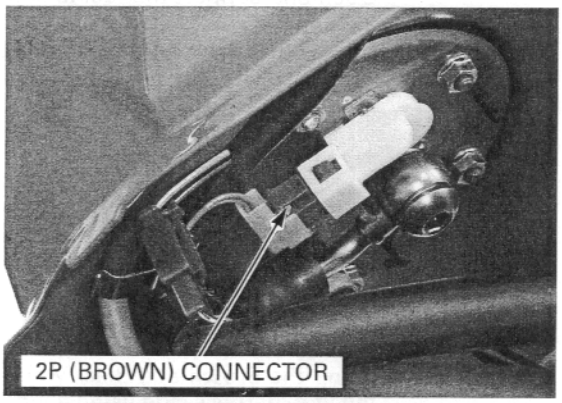

Turn the ignition switch ON and measure the voltage between the terminals.

Connection: Brown (+) – Green (–)

There should be battery voltage for a few seconds.

If there is battery voltage, replace the fuel pump.

If there is no battery voltage, inspect the following:
- Main fuse 30A
- Sub fuse 10A
- Engine stop switch (page 20-22)
- Fuel cut-off relay (page 5-56)
- Engine stop relay (page 5-83)
- Bank angle sensor (page 5-82)
- ECM (page 5-84)

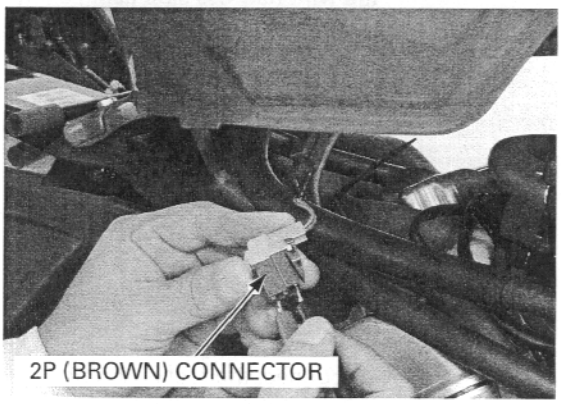

REMOVAL

NOTICE

- *Before disconnecting the fuel hoses, release the fuel pressure by loosening the fuel feed hose banjo bolt at the fuel tank.*
- *Always replace the sealing washers when the fuel feed hose banjo bolt is removed or loosened.*

Remove the fuel tank (page 5-56).

Remove the fuel pump mounting nuts and clamp.

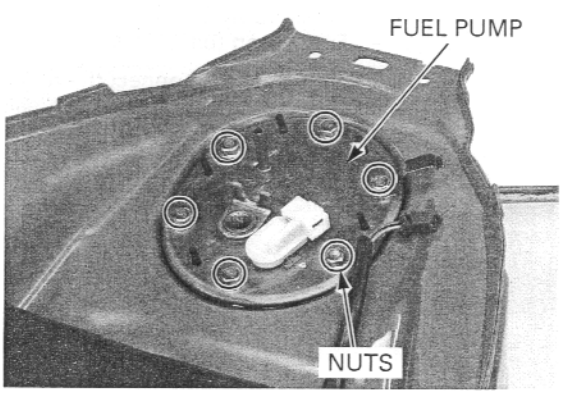

Be careful not to damage the pump rubber and pump wire.

Remove the fuel pump assembly and packing.

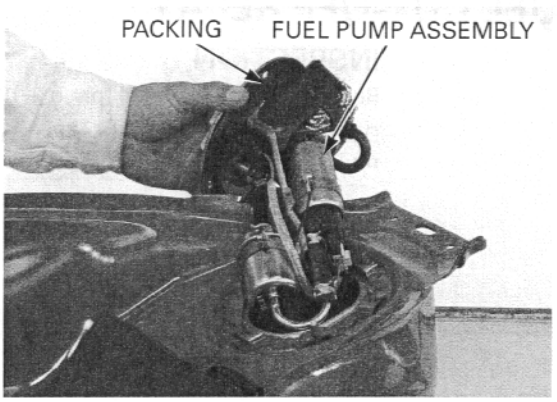

FUEL FILTER REPLACEMENT

Disconnect the fuel hoses from the fuel filter.
Remove the screws and fuel filter.

Note the direction of the fuel filter.

Install the fuel filter in the reverse order of removal.

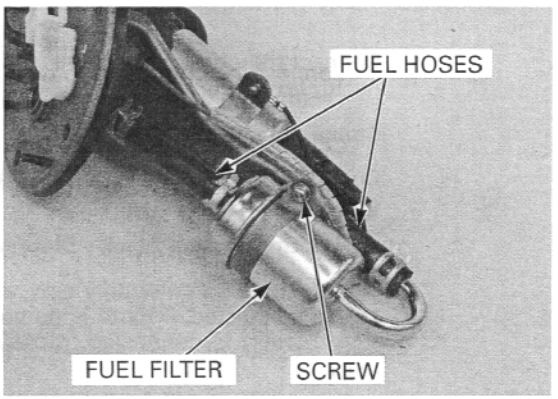

INSTALLATION

Always replace the packing with a new one.

Place a new packing onto the fuel pump.

Install the fuel pump being careful not to damage the fuel pump wire and packing.

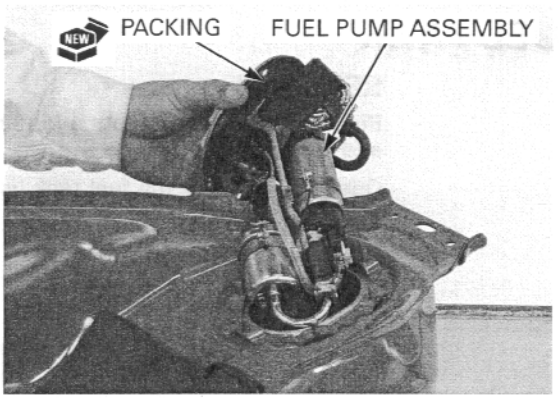

Install clamp and nuts, then tighten the fuel pump mounting nuts in the sequence shown.

TORQUE: 12 N·m (1.2 kgf·m, 9 lbf·ft)

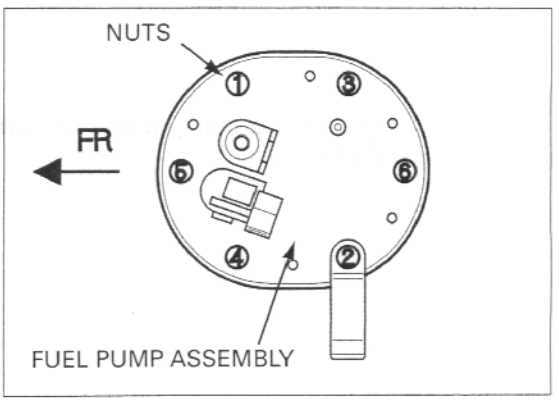

FUEL CUT-OFF RELAY

INSPECTION

Remove the upper cowl (page 2-12).

Disconnect the fuel cut-off relay 4P connector, remove the fuel cut-off relay.

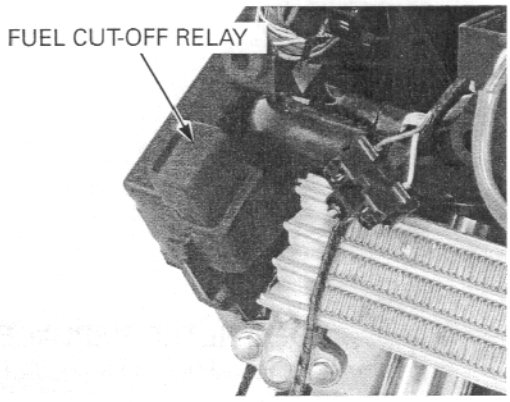

Connect the ohmmeter to the fuel cut-off relay connector terminals.

Connection: Black/white – Brown

Connect the 12 V battery to the following fuel cut-off relay connector terminals.

Connection: Brown/black – Black/white

There should be continuity only when the 12 V battery is connected. If there is no continuity when the 12 V battery is connected, replace the fuel cut-off relay.

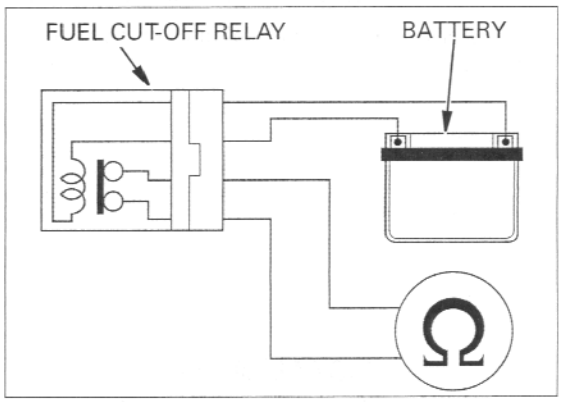

FUEL TANK

REMOVAL

Remove the fuel tank front mounting bolts, washers and collars.

Open and support the fuel tank using the equipped tools (page 3-5).

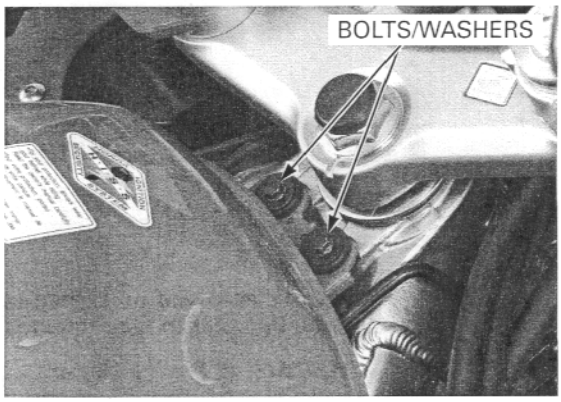

Remove the bolt and fuel tank stopper chain from the fuel tank.

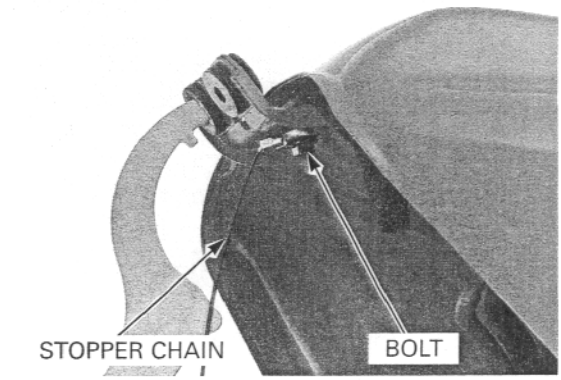

Disconnect the fuel tank air vent hose and overflow hose.

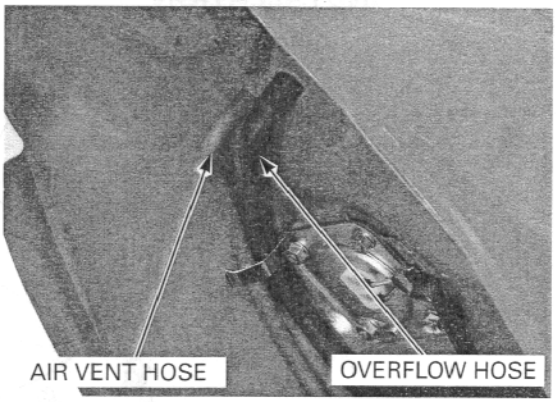

Disconnect the fuel level sensor 2P (Blue) connector and fuel pump 2P (Brown) connector.

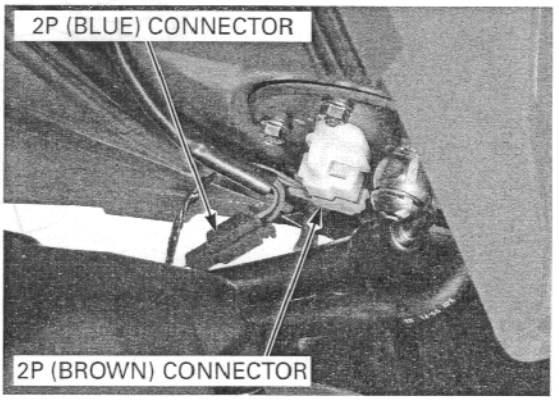

Close the fuel tank then remove the fuel tank rear mounting bolts.

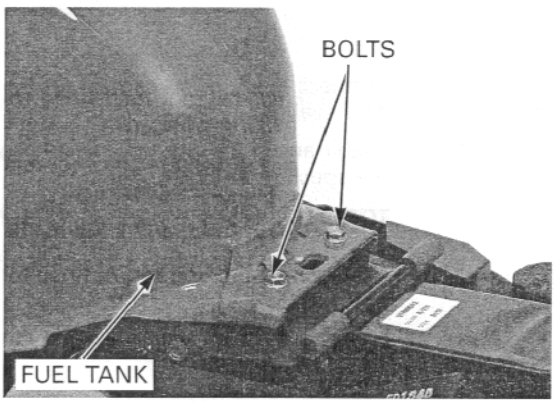

Place the fuel tank upside down.

NOTICE

Be careful not to damage the fuel tank.

Disconnect the fuel return hose from the fuel pump. Remove the fuel feed hose banjo bolt and sealing washers, then remove the fuel feed hose from the fuel pump.

Refer to procedures for fuel level sensor removal (page 20-19).
Refer to procedures for fuel pump removal (page 5-54).

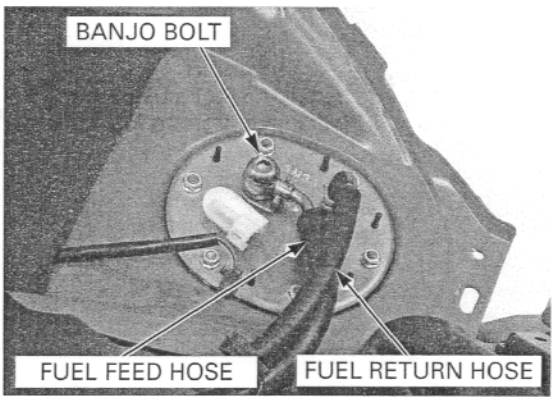

INSTALLATION

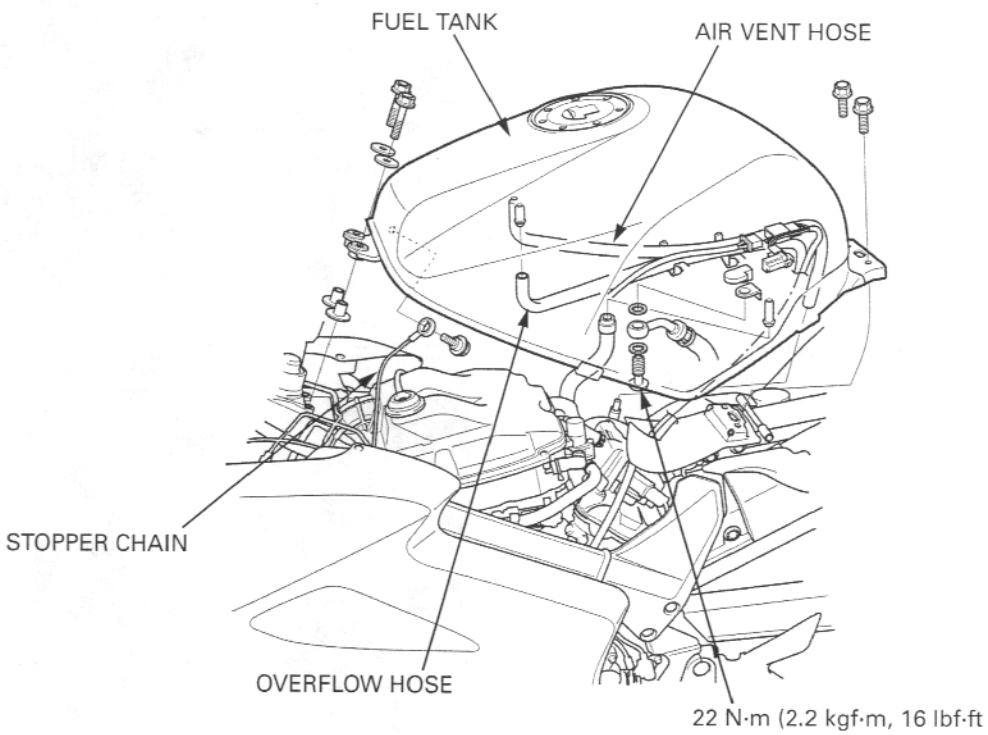

Align the fuel hose eyelet joint with the stopper on the fuel pump.

Connect the fuel feed hose to the fuel pump with new sealing washers.

Install and tighten the fuel feed hose banjo bolt to the specified torque.

TORQUE: 22 N·m (2.2 kgf·m, 16 lbf·ft)

Connect the fuel return hose to the fuel pump.

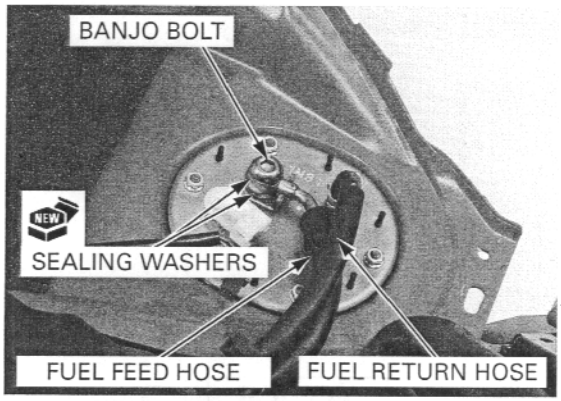

Install the fuel tank onto the frame.
Install and tighten fuel tank rear mounting bolts.

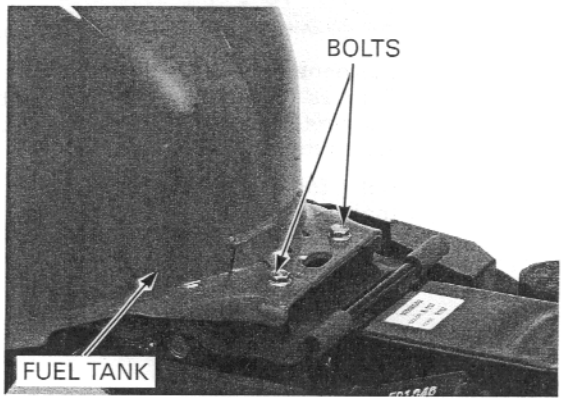

Open and support the fuel tank using the equipped tools (page 3-5).

Connect the fuel level sensor 2P (Blue) connector and fuel pump 2P (Brown) connector.

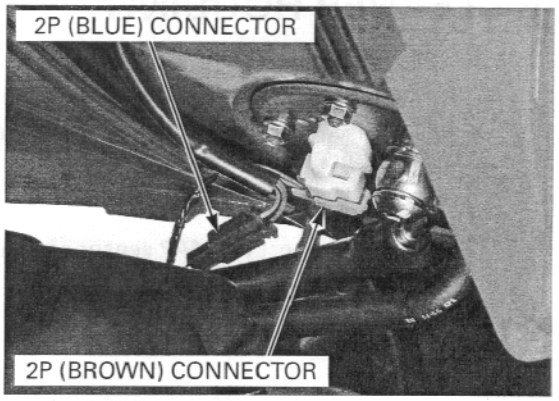

Route the fuel tank air vent hose and overflow hose and clamp the hoses.
Connect the fuel tank air vent hose and overflow hose to the fuel tank.

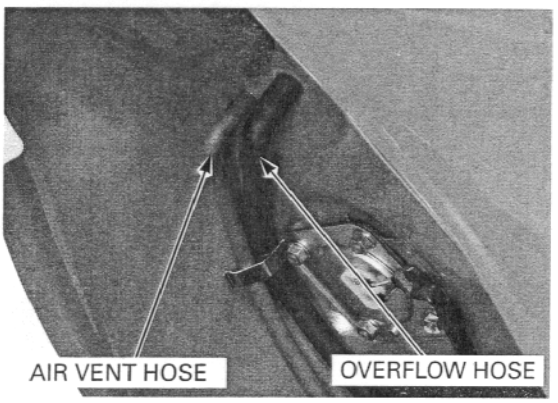

Install the fuel tank stopper chain eyelet to the fuel tank, then install and tighten the bolt securely.

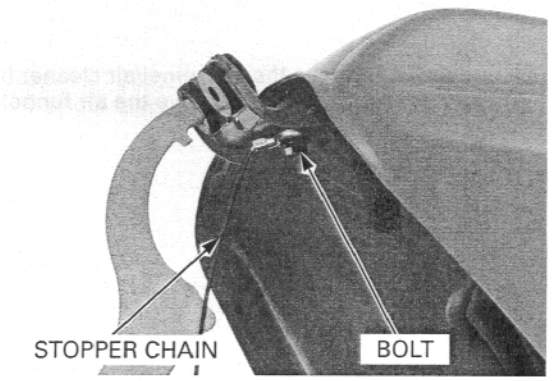

Close the fuel tank.
Install the collars, washers and mounting bolts, tighten the bolts securely.

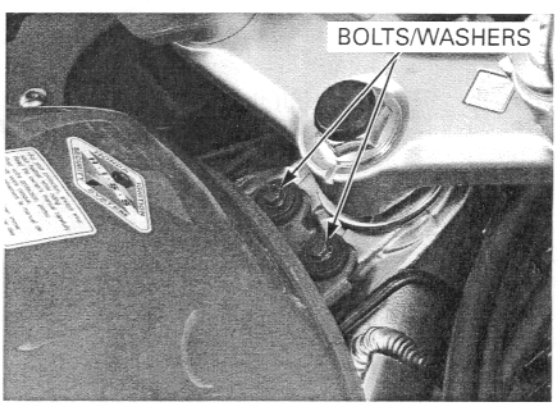

AIR CLEANER HOUSING

REMOVAL

Remove the air cleaner element (page 3-6).

Disconnect the PAIR solenoid valve 2P (Natural) connector.
Disconnect the PAIR air hose from the air cleaner housing.

Disconnect the MAP sensor connector.

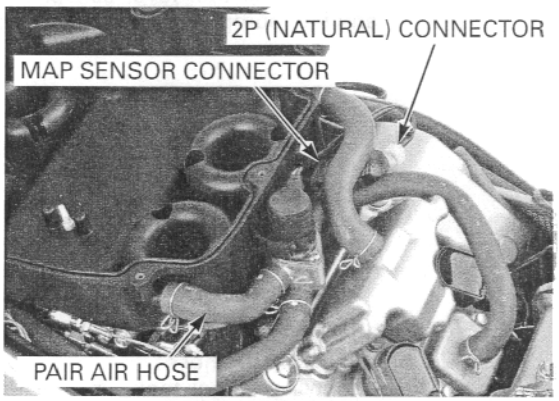

Disconnect the vacuum hose from the MAP sensor.

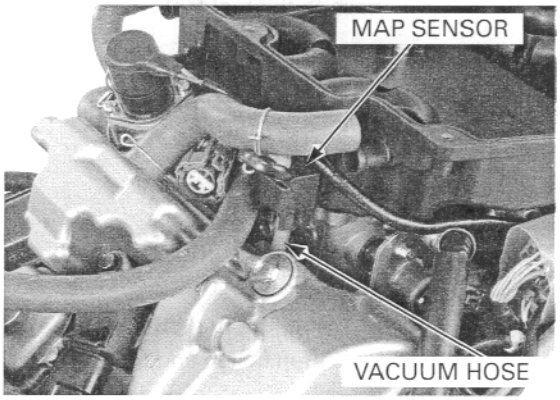

Remove the air funnel/air cleaner housing mounting screws, then remove the air funnels.

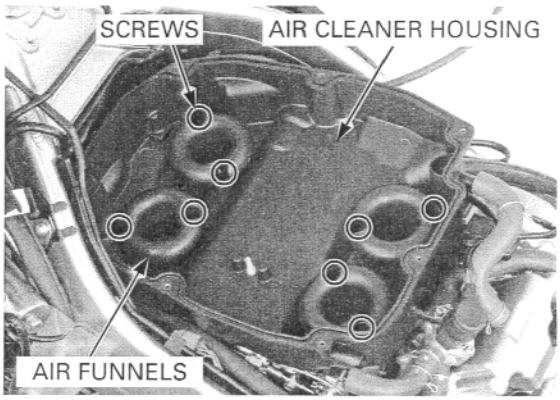

Slightly lift the air cleaner housing, then disconnect the 2P (White) connector from the IAT sensor.

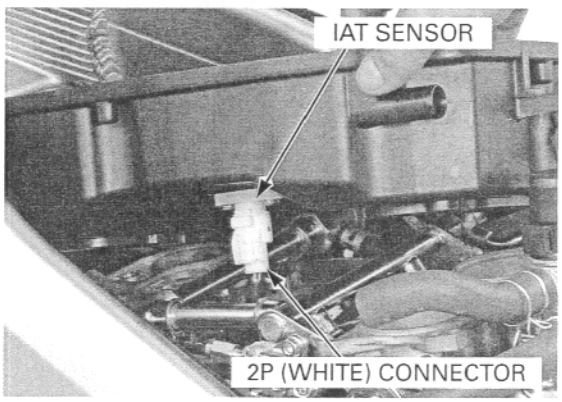

Disconnect the 2P (Gray) connector from the bypass control solenoid valve.
Disconnect the No.12 vacuum hose from the one-way valve.

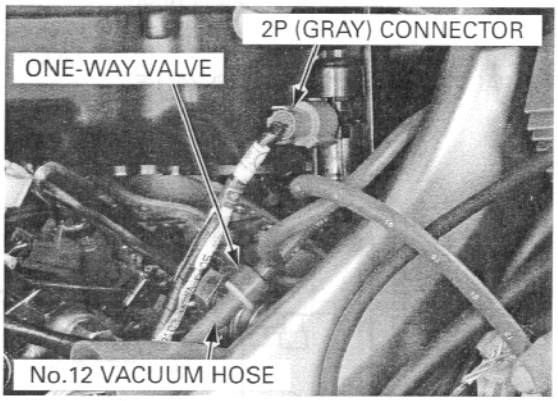

Remove the air cleaner housing.

If necessary, disconnect the No.10 hose from the vacuum chamber and No.15 vacuum hose from the bypass control solenoid valve.

Remove the following:

- MAP sensor (page 5-77)
- IAT sensor (page 5-78)
- Bypass control solenoid valve (page 5-85)
- Vacuum chamber (page 5-87)

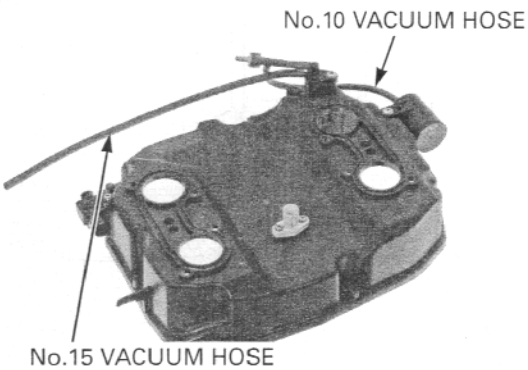

INSTALLATION

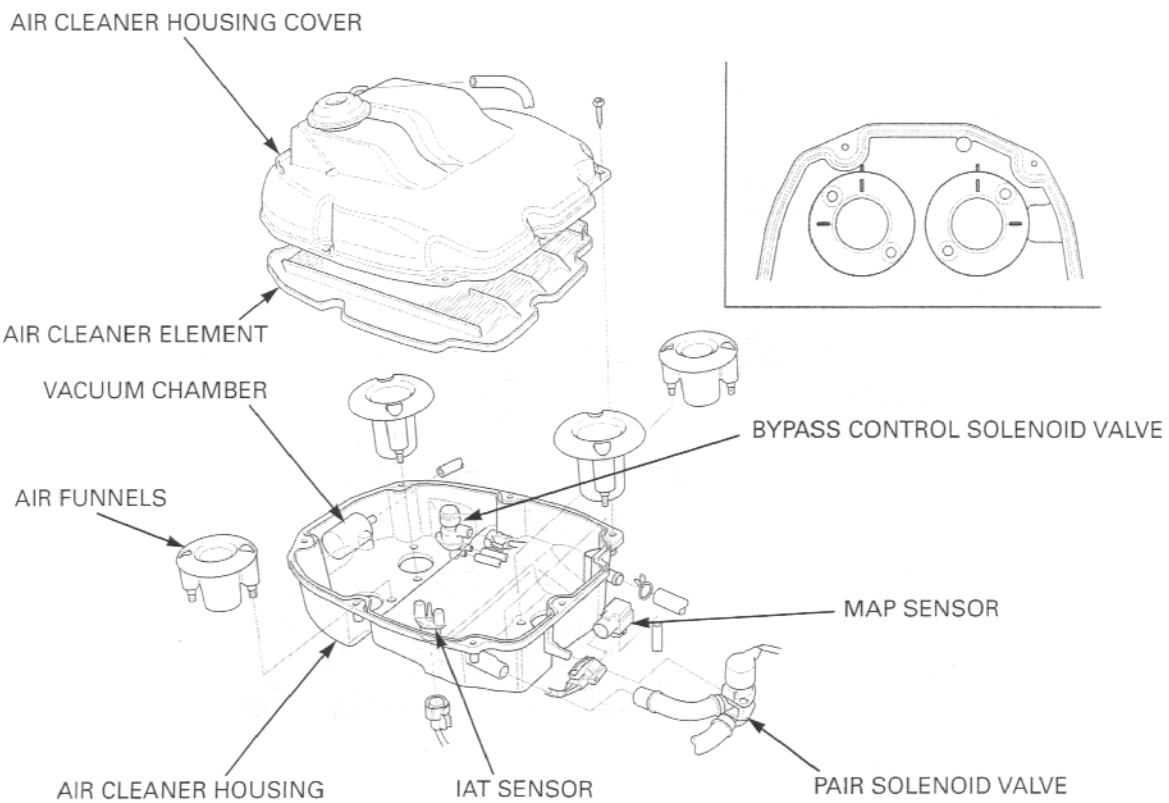

49 states/Canada type:

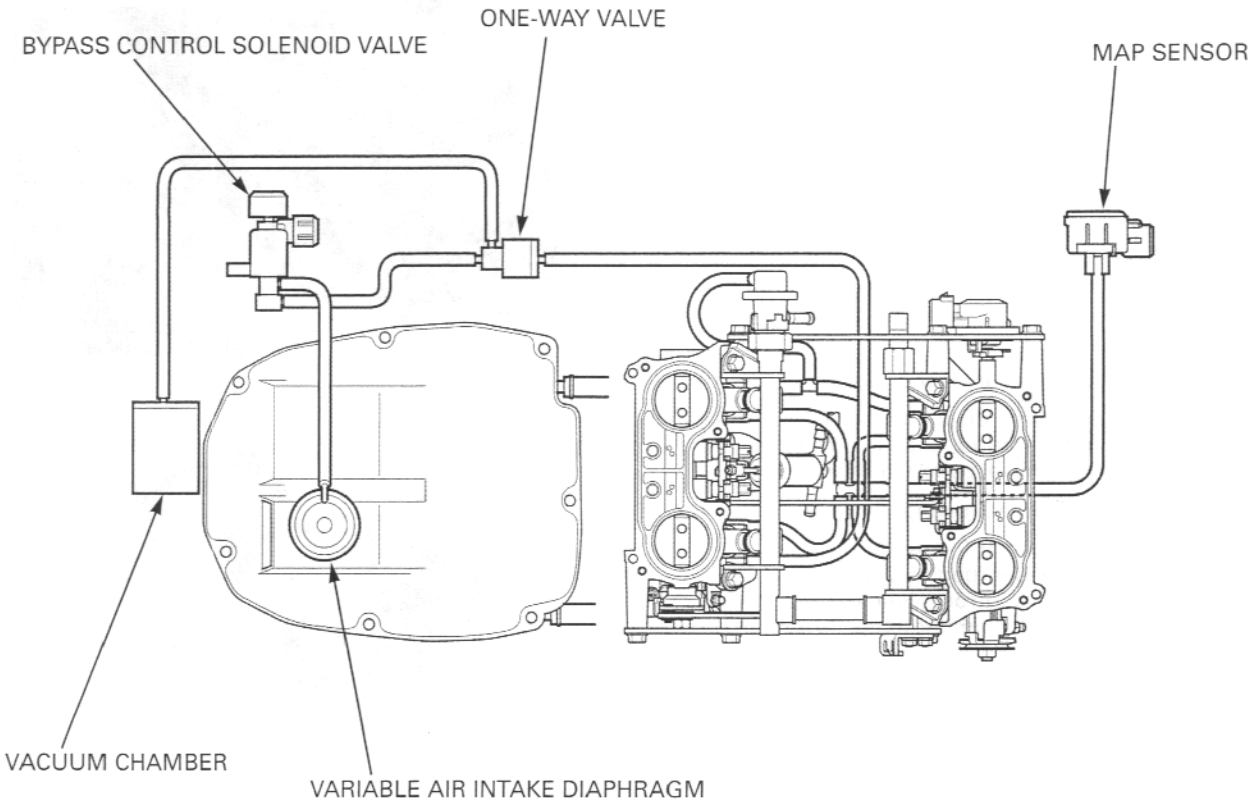

California type:

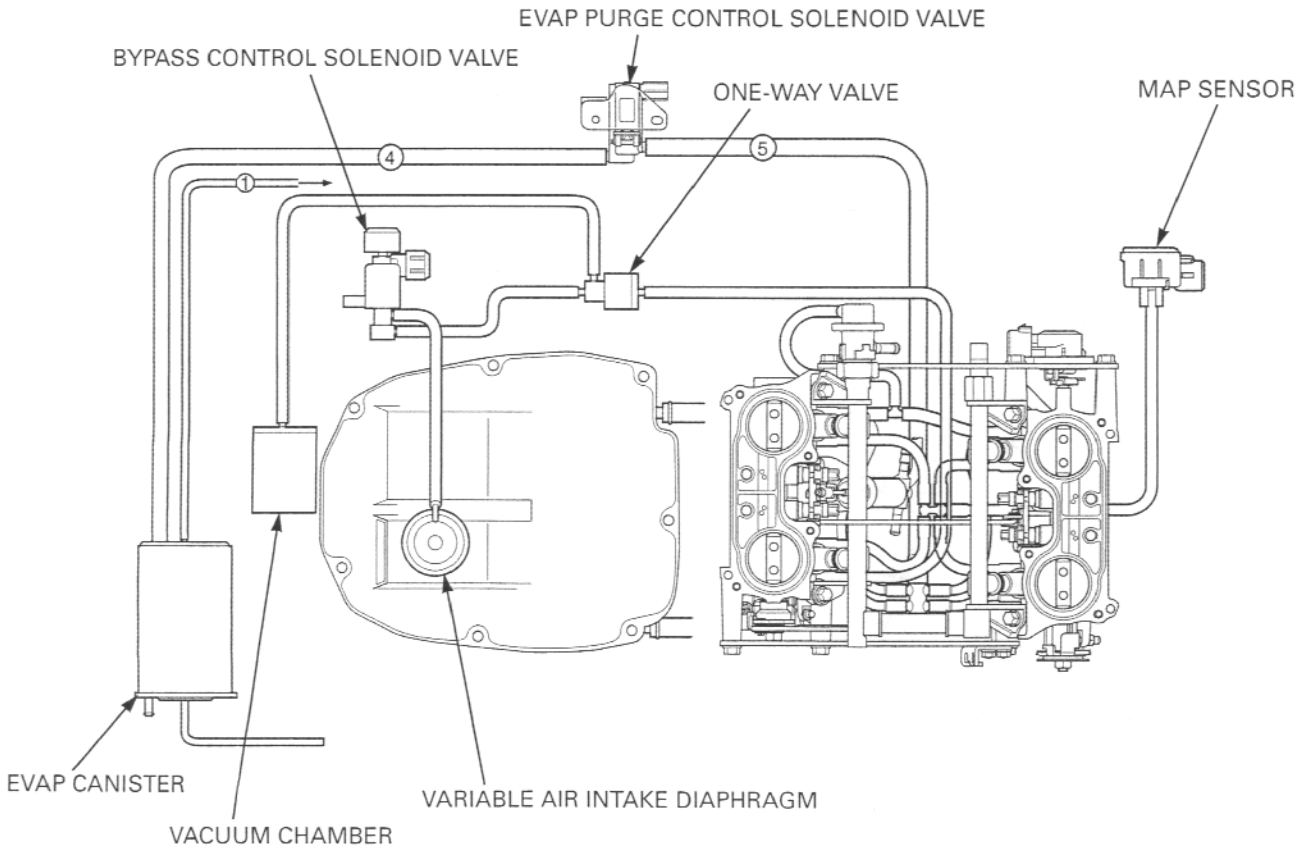

Route the wires and vacuum hoses properly (page 5-61).

Install the air cleaner housing in the reverse order of removal.

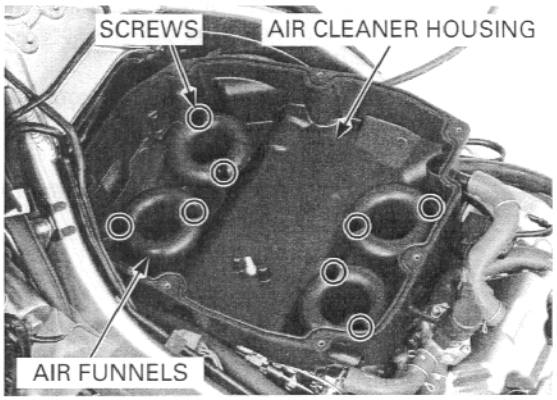

THROTTLE BODY

REMOVAL

NOTICE

- *Bending or twisting the control cables will impair smooth operation and could cause the cables to stick or bind, resulting in loss of vehicle control.*
- *Before disconnecting the fuel hose, release the fuel pressure by loosening the fuel hose banjo bolt.*
- *Always replace the sealing washer when the fuel hose banjo bolt is removed or loosened.*

Drain the coolant from the cooling system (page 6-6).

Remove the following:
- Fuel tank (page 5-56)
- Air cleaner housing (page 5-60)

Remove the throttle stop screw knob from the cable stay.

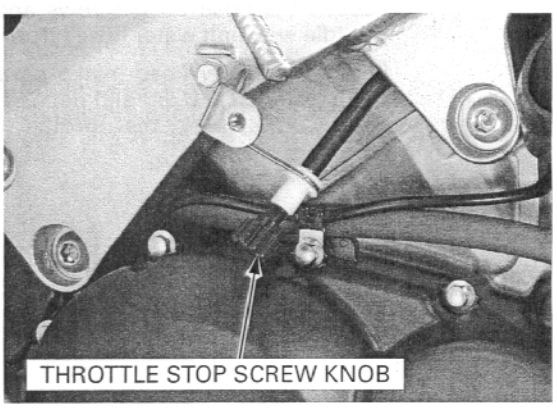

Disconnect the throttle body sub-harness 10P (Gray) connector.

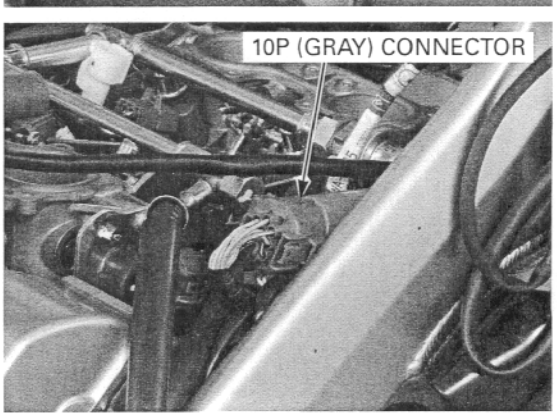

Loosen the throttle body side insulator band screws using a long type phillips screwdriver through the frame hole.

Remove the throttle body from the insulators.

NOTICE

Do not hold the fuel pipe on the throttle body while removing the throttle body.

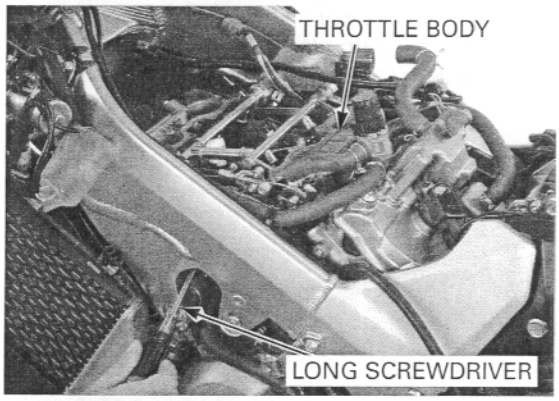

Do not snap the throttle valve from full open to full close after the throttle cable has been removed. It may cause incorrect idle operation.

Remove the throttle cable bracket socket bolts and disconnect the throttle cable ends from the throttle drum.

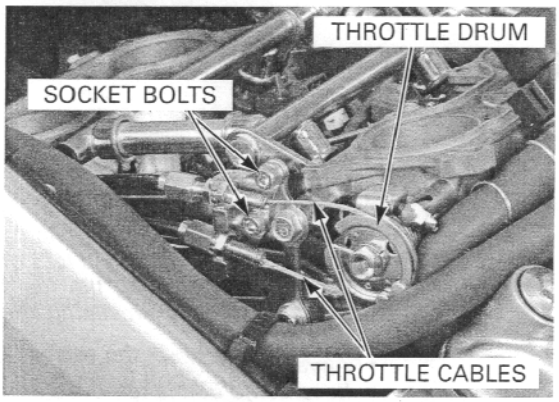

Loosen the hose band screws and disconnect the fast idle wax unit water hoses from the wax unit.

Seal the cylinder head intake ports with tape or a clean cloth to keep dirt and debris from entering the intake ports after the throttle body has been removed.

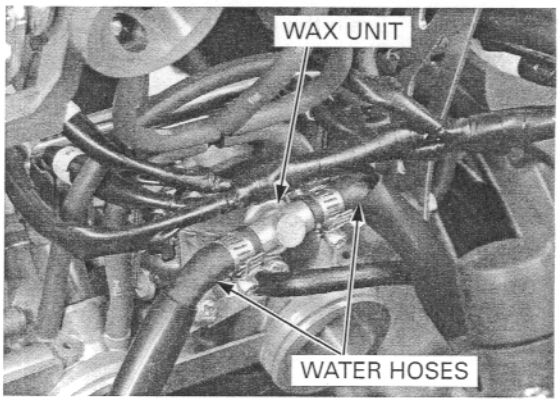

NOTICE

- *Do not damage the throttle body. It may cause incorrect throttle and idle valve synchronization.*
- *The throttle body is factory pre-set. Do not disassemble in a way other than shown in this manual.*
- *Do not loosen or tighten the white painted bolts and screws of the throttle body. Loosening or tightening them can cause throttle and idle valve synchronization failure.*

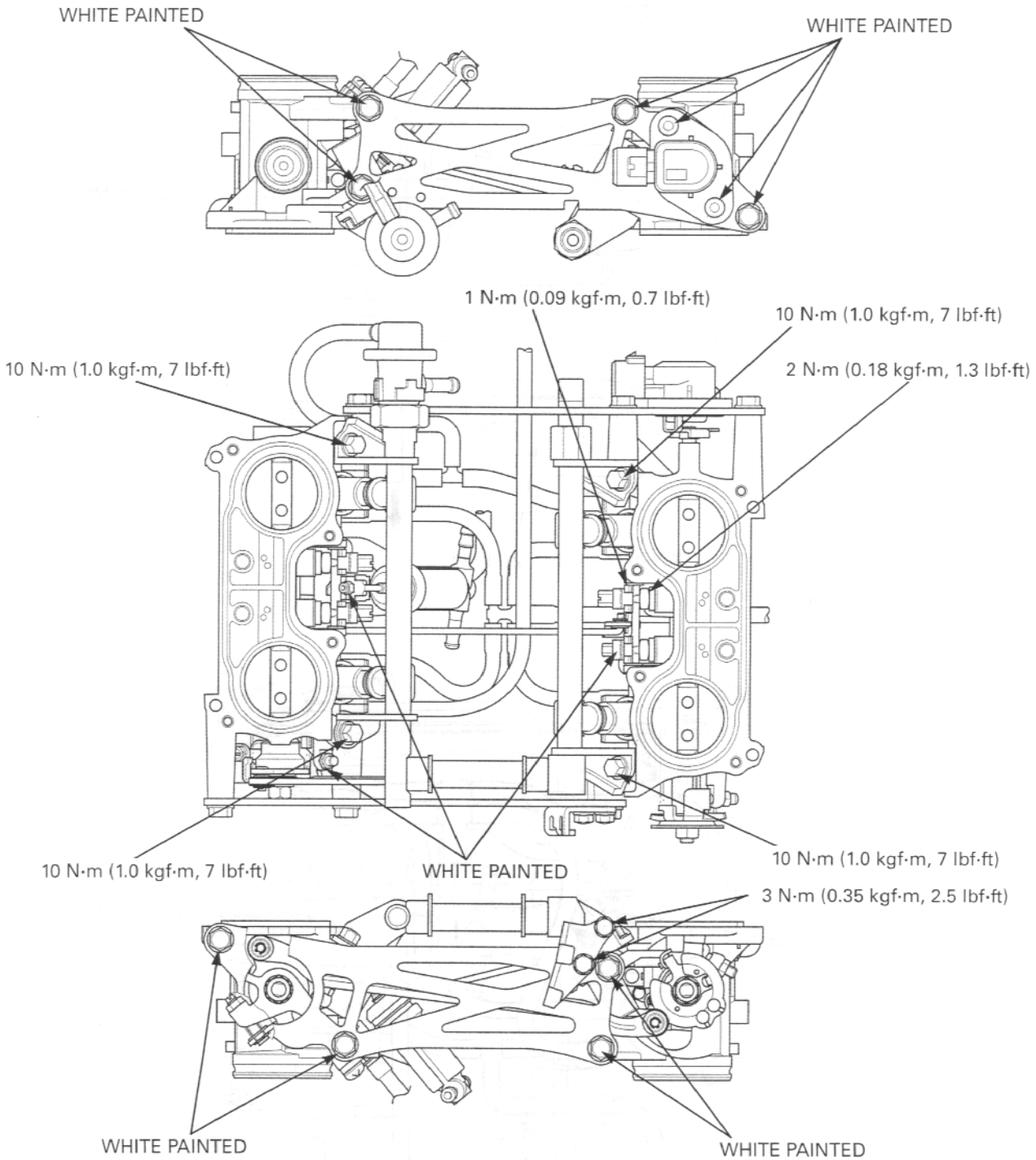

THROTTLE BODY VACUUM HOSE ROUTING

49 states/Canada type:

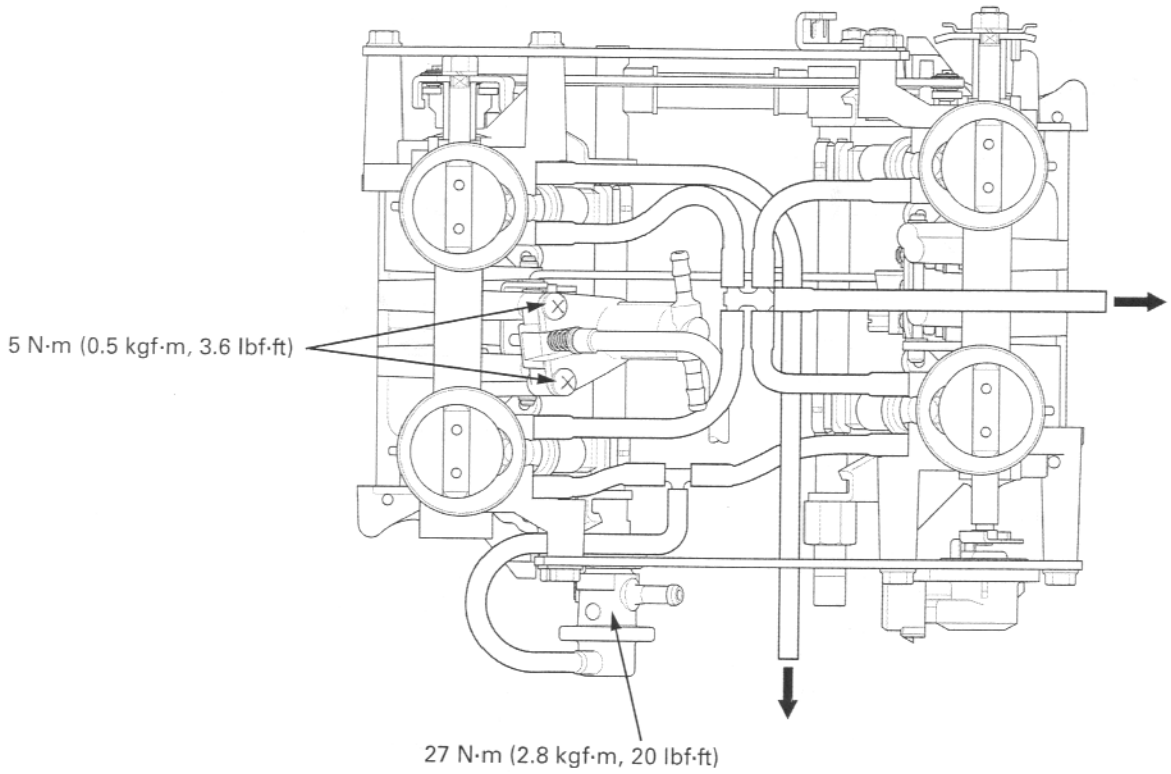

California type:

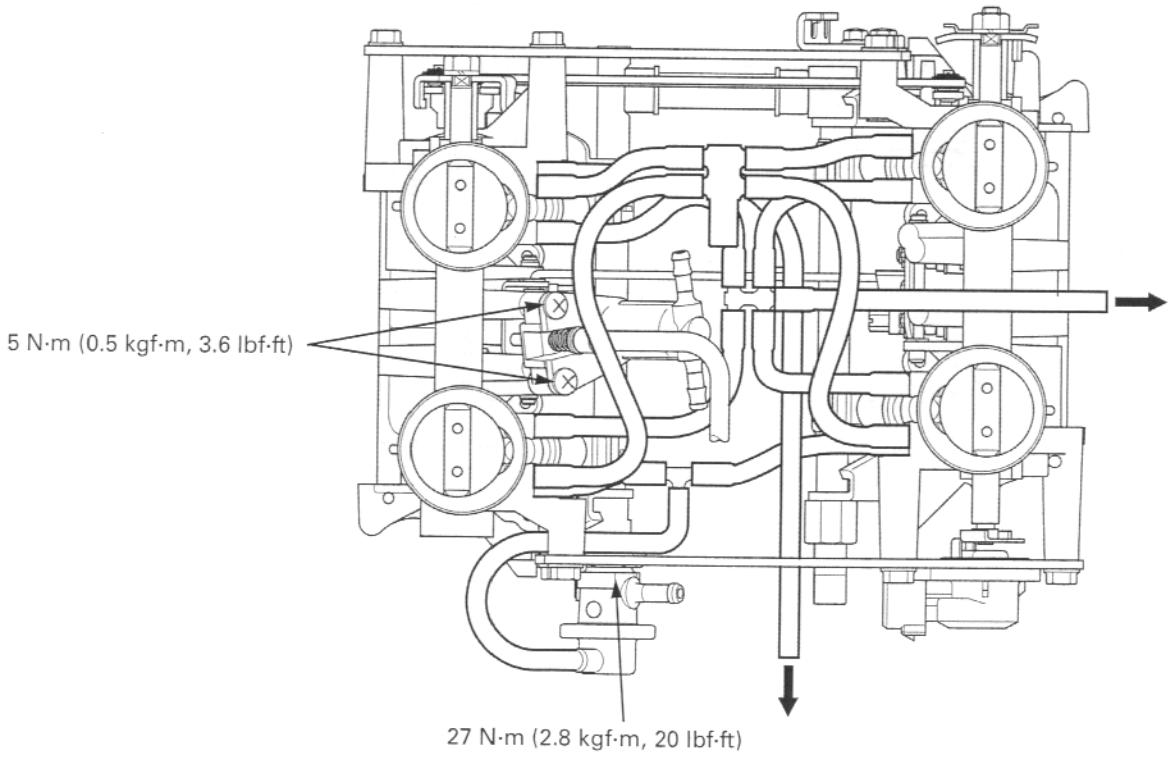

INSTALLATION

Check the insulator band angle.

Apply oil to the insulator inside surfaces for ease of the throttle body installation.

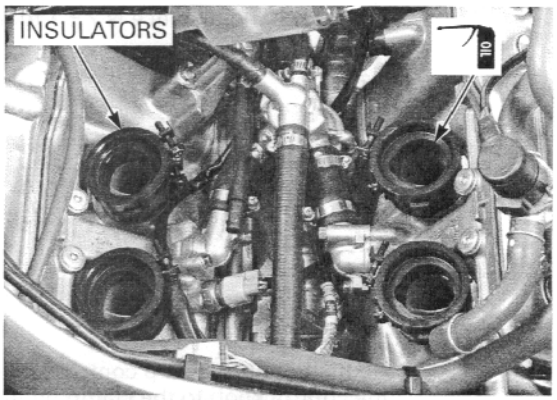

Connect the fast idle wax unit water hoses to the unit, then tighten the hose bands securely.

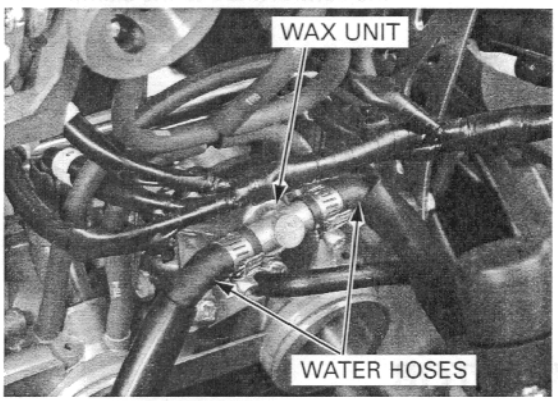

Connect the throttle cable ends to the throttle drum. Install the throttle cable guide bracket to the throttle body, then tighten the socket bolts to the specified torque.

TORQUE: 3 N·m (0.35 kgf·m, 2.5 lbf·ft)

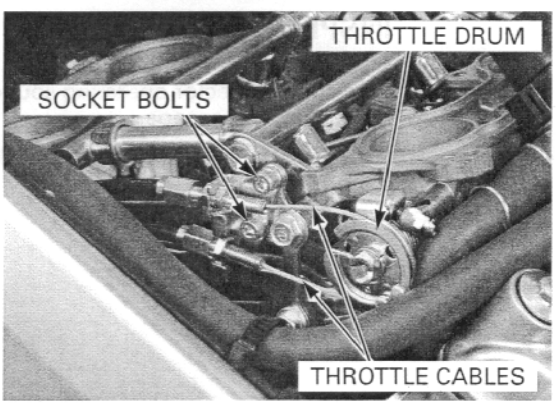

Route the throttle body sub-harness properly, connect the 10P (Gray) connector.

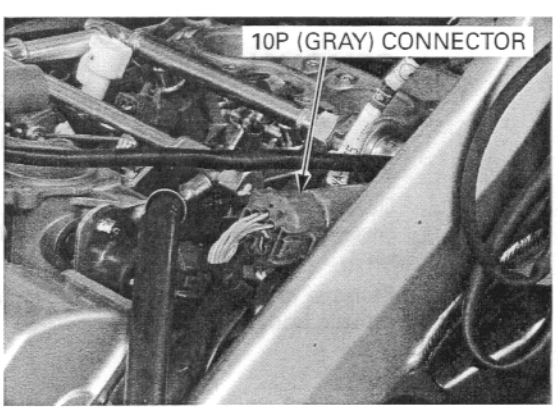

Install the throttle body into the insulators, tighten the throttle body side insulator band so that the insulator band distance is 7 ± 1 mm (0.3 ± 0.04 in).

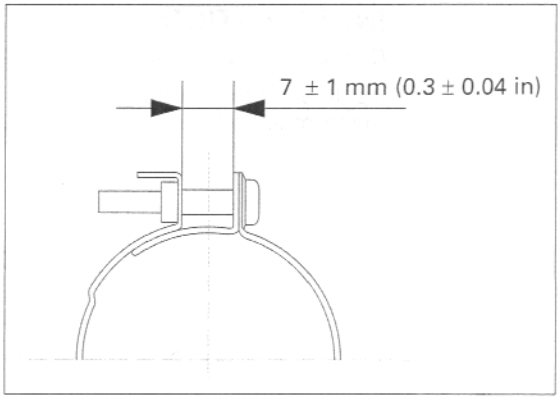

Route the throttle stop control cable properly, install the control knob to the clamp on the cable stay.

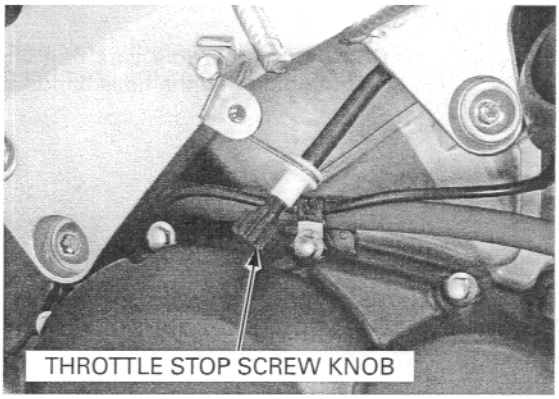

INJECTOR

INSPECTION

Start the engine and let it idle.
Confirm the injector operating sounds with a sounding rod or stethoscope.

If the injector does not operate, replace the injector.

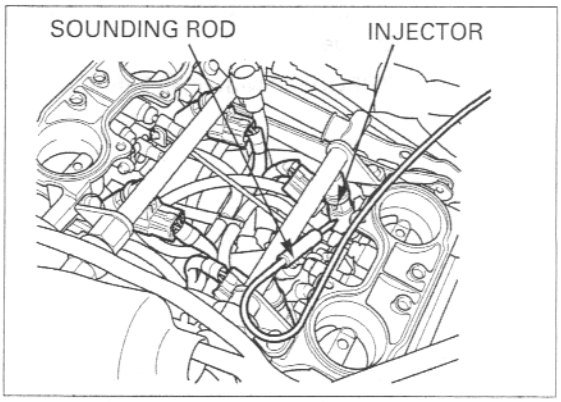

REMOVAL

Remove the throttle body (page 5-63).

Disconnect the vacuum hose from the pressure regulator.

Disconnect the TP sensor connector.
Disconnect the injector connectors from each injector.

Remove the throttle body sub-harness from the throttle body.

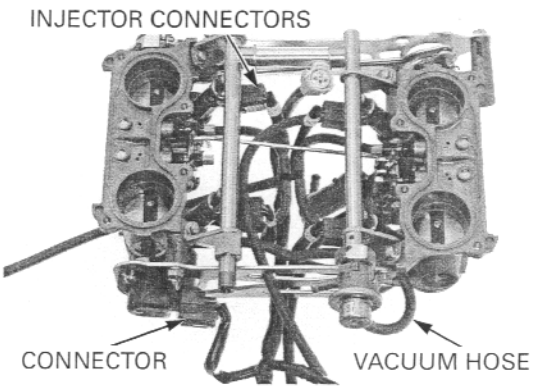

Remove the four bolts and fuel rail assembly.

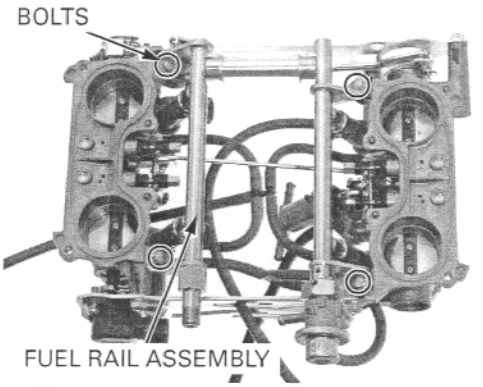

Remove the injectors from the throttle body.

Remove the seal ring, O-ring and cushion ring.

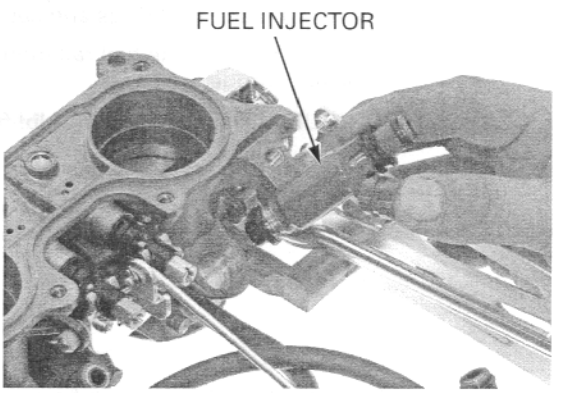

INSTALLATION

Apply oil to the new O-ring.

Replace the seal ring, cushion ring and O-ring with new ones as a set.

Install the new seal ring, cushion ring and O-ring, being careful not to damage the O-ring.

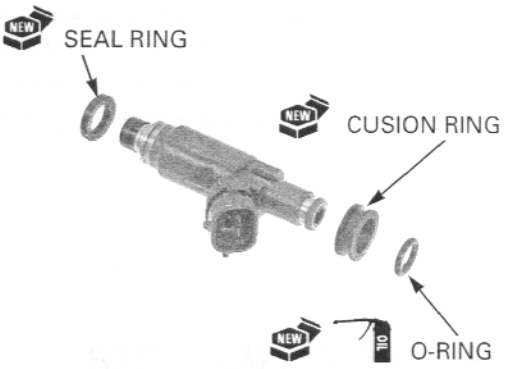

Install the fuel injectors into the throttle body, being careful not to damage the seal rings.

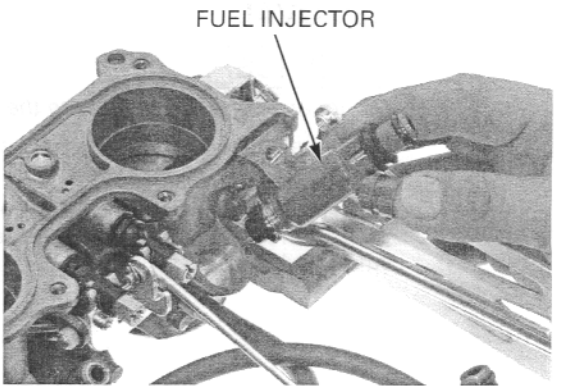

Install the new O-ring onto the rail joint flange.

Assemble the fuel rails and rail joint.

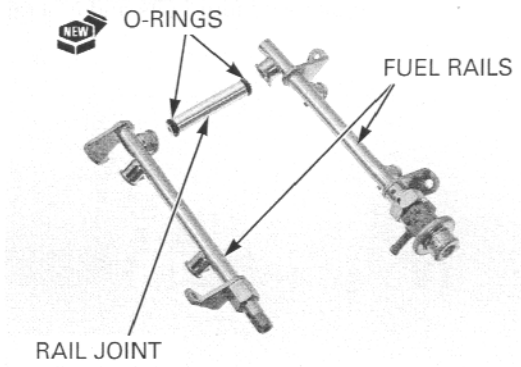

Install the fuel rail over the injectors, being careful not to damage the O-rings and cushion rings.

Install and tighten the fuel rail mounting bolts to the specified torque.

TORQUE: 10 N·m (1.0 kgf·m, 7 lbf·ft)

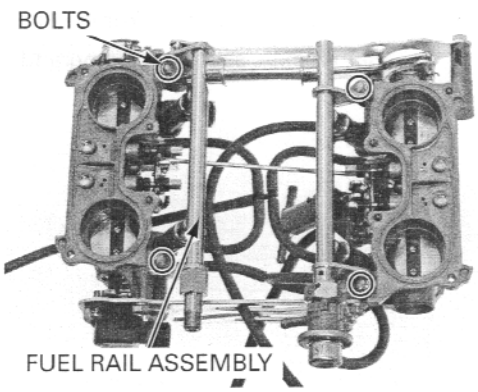

Route the throttle body sub-harness into the throttle body.

The throttle body sub-harness has identification marks for injector connections. Install the injector connectors in the proper locations.

Connect the injector connectors to each injector. Connect the TP sensor connector.

Connect the vacuum hose to the pressure regulator.

Install the throttle body (page 5-67).

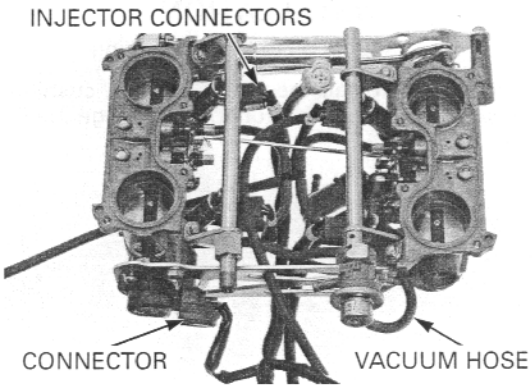

PRESSURE REGULATOR

REMOVAL

NOTICE

Do not apply excessive force to the fuel rail.

Disconnect the vacuum hose from the pressure regulator.

Hold the fuel rail bracket nut securely, loosen the pressure regulator lock nut, then remove the pressure regulator.

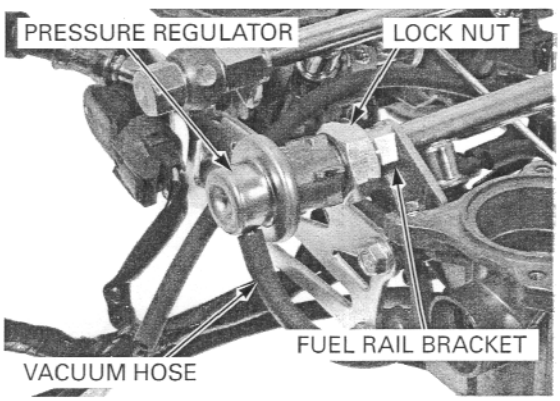

INSTALLATION

Install the pressure regulator onto the fuel rail.

Hold the fuel rail bracket nut securely, tighten the pressure regulator lock nut to the specified torque.

TORQUE: 27 N·m (2.8 kgf·m, 20 lbf·ft)

Connect the vacuum hose to the pressure regulator.

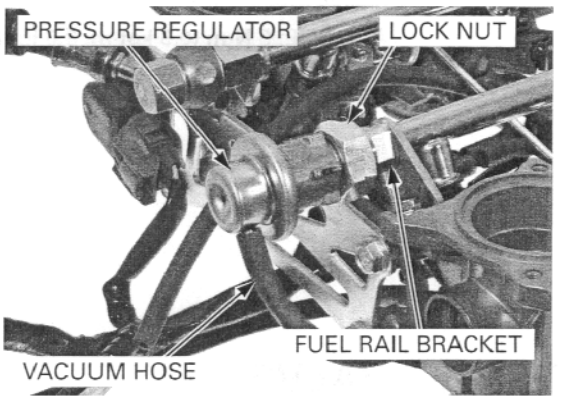

FAST IDLE WAX UNIT

REMOVAL

Do not loosen or remove the wax unit shaft lock nut and adjusting nut.

Remove the wax unit mounting screws.

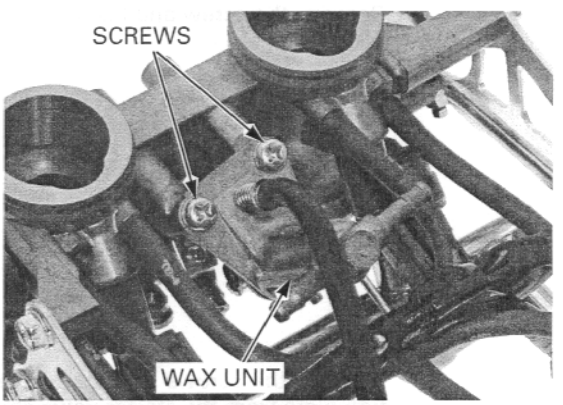

Do not disassemble the fast idle wax unit.

Release the wax unit shaft joint piece from the wax unit link arm, then remove the wax unit assembly.

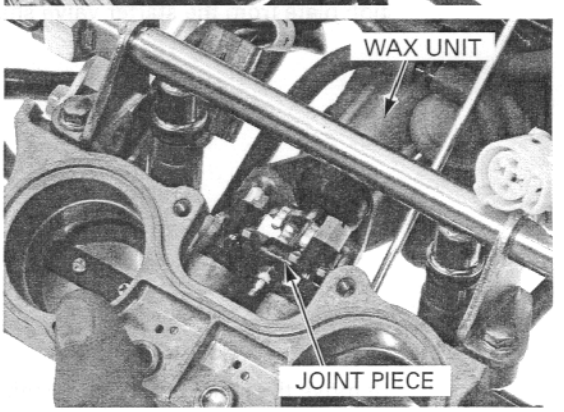

INSTALLATION

Install the wax unit shaft joint piece to the wax unit link arm.

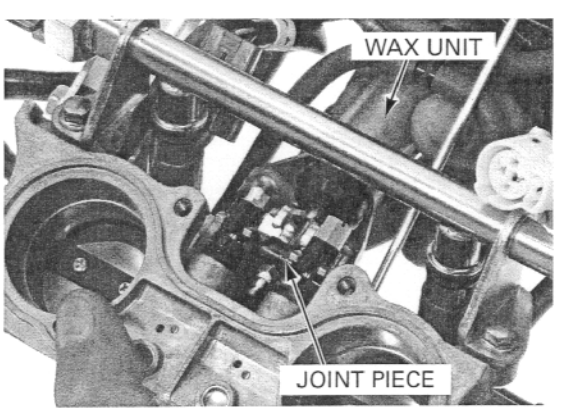

Install and tighten the wax unit mounting screws to the specified torque.

TORQUE: 5 N·m (0.5 kgf·m, 3.6 lbf·ft)

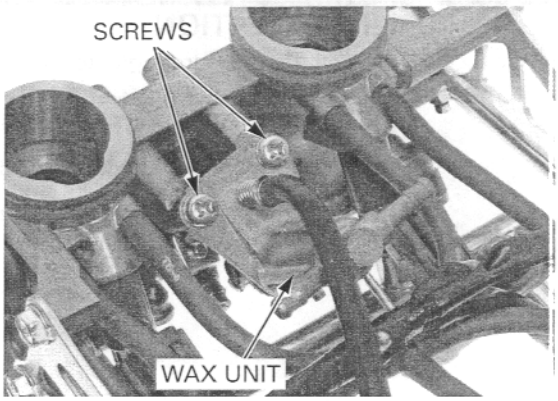

STARTER VALVE

DISASSEMBLY

Remove the fast idle wax unit (page 5-71).

Remove the screw and fast idle wax unit link plate.

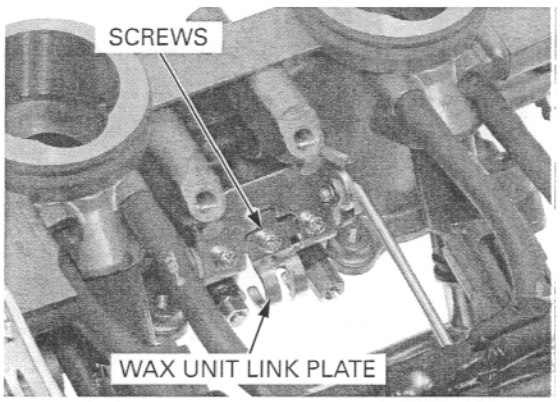

Remove the screws and starter valve synchronization plate from the starter valve shaft.

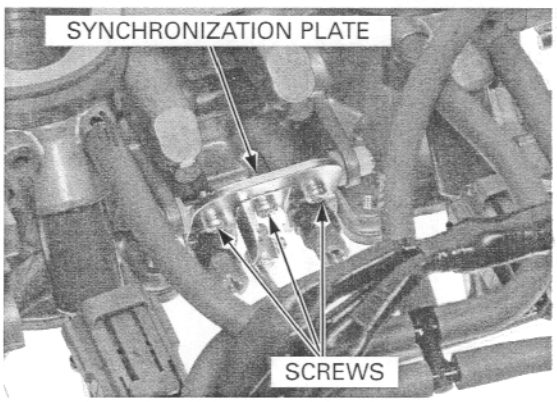

Remove the starter valve arm shaft and collars.

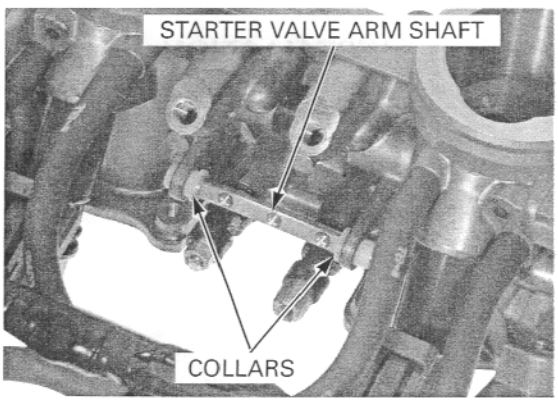

Turn each starter valve adjusting screw in, counting number of turns until it seats lightly.
Record the number of turns.

Loosen the each lock nut and remove the each starter valve.

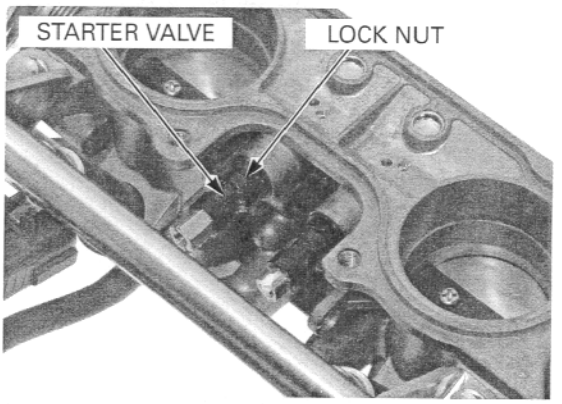

Do not apply commercially available carburetor cleaners to the inside of the throttle bore, which is coated with molybdenum.

Clean the starter valve bypass using compressed air.

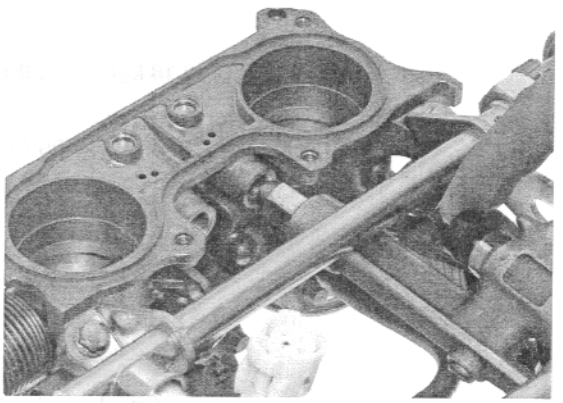

ASSEMBLY

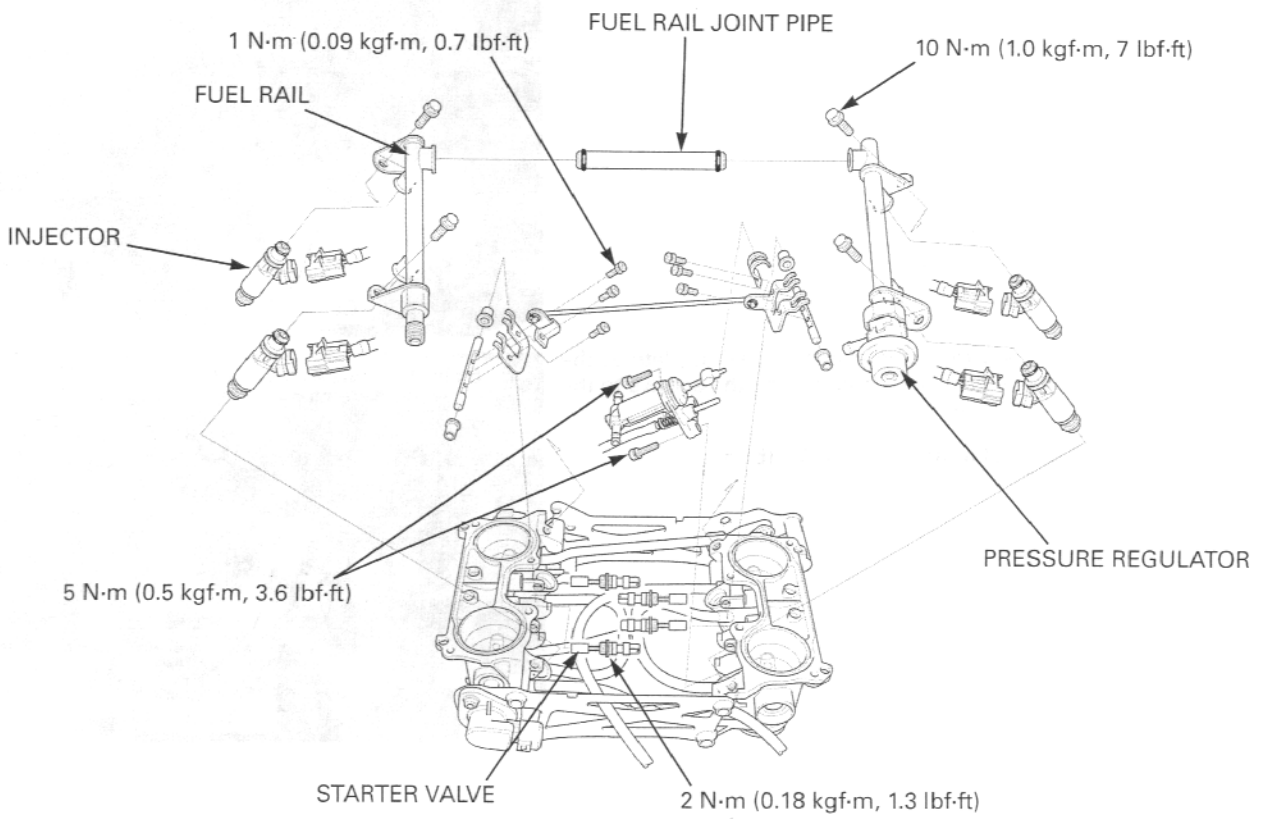

Install the starter valve assembly into the valve hole.

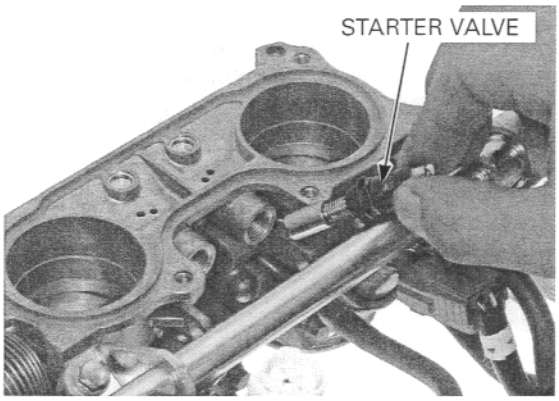

Tighten the starter valve lock nut to the specified torque.

TORQUE: 2 N·m (0.18 kgf·m, 1.3 lbf·ft)

Turn the starter valve screw until it seats lightly, then back it out as noted during removal.

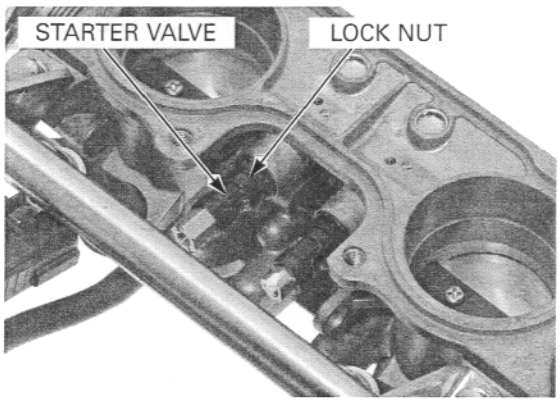

Install the collars and starter valve link arm shaft.

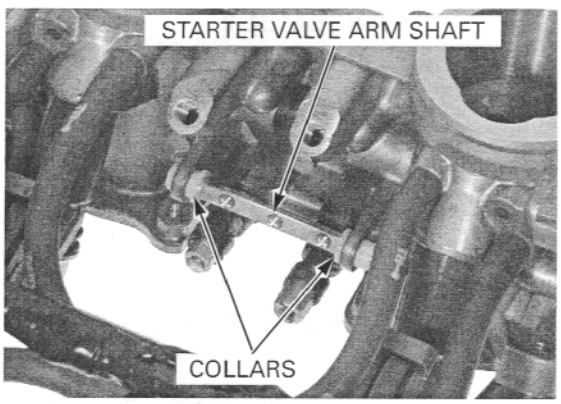

Install the starter valve synchronization plate to the starter valve arm shaft and tighten the screws to the specified torque.

TORQUE: 1 N·m (0.09 kgf·m, 0.7 lbf·ft)

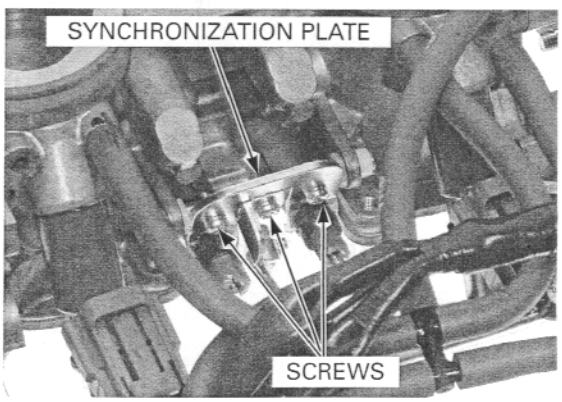

Install the fast idle wax unit link plate and tighten the screw to the specified torque.

TORQUE: 1 N·m (0.09 kgf·m, 0.7 lbf·ft)

Install the fast idle wax unit (page 5-71).

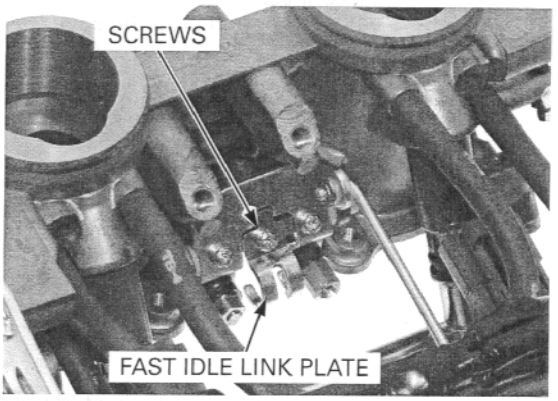

STARTER VALVE SYNCHRONIZATION

- Synchronize the starter valve with the engine at the normal operating temperature and with the transmission in neutral.
- Use a tachometer with graduations of 50 rpm or smaller that will accurately indicate 50 rpm change.

Remove the air cleaner housing (page 5-60).

Remove the MAP sensor from the air cleaner housing (page 5-77).

Temporarily connect the MAP sensor vacuum hose and connector.

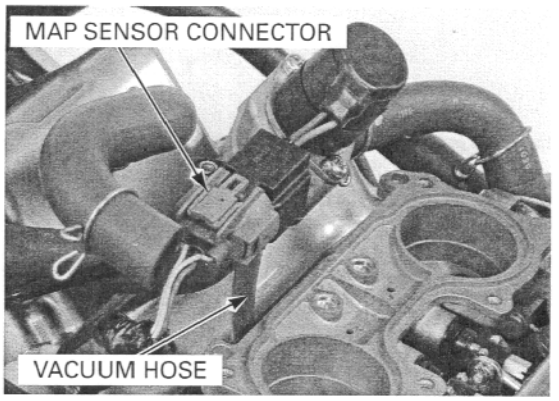

Disconnect the each cylinder vacuum hose from the 5-way joint.

Connect the hoses to the vacuum gauge.

Connect the tachometer.

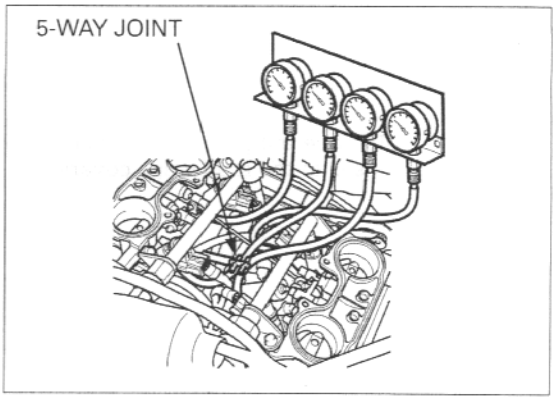

Disconnect each PAIR air suction hose from the reed valve cover and plug the cover.

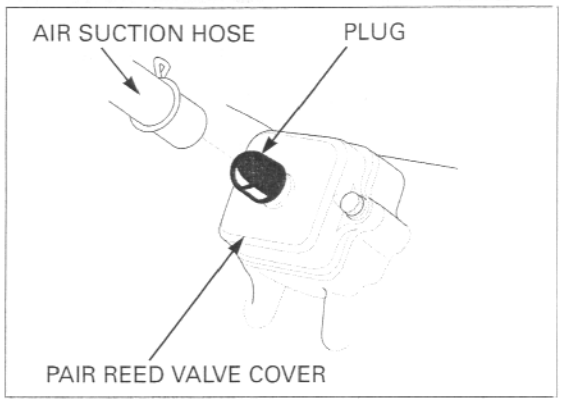

Start the engine and adjust the idle speed.

IDLE SPEED: 1,200 ± 100 rpm

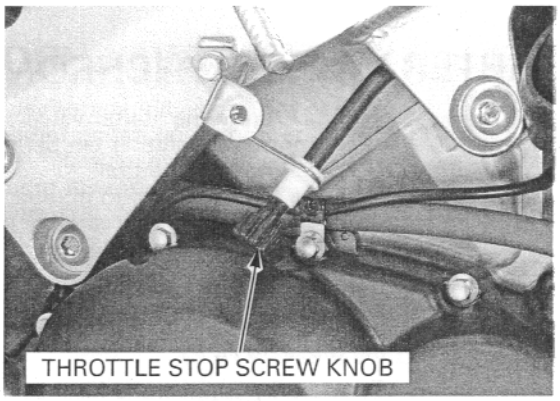

The No.4 starter valve cannot be adjusted, it is the base starter valve.

Adjust each intake vacuum pressure with the No.4 cylinder.

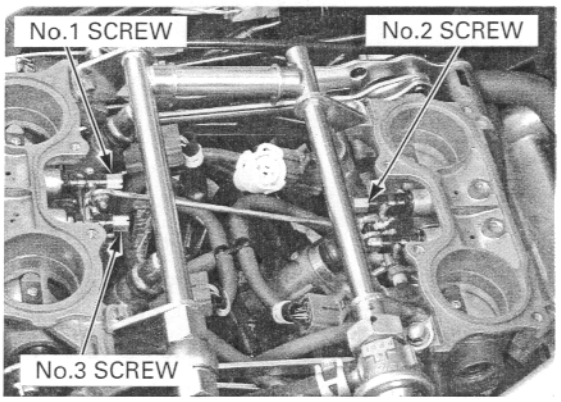

Remove the plugs and connect the PAIR air suction hoses to the reed valve covers.

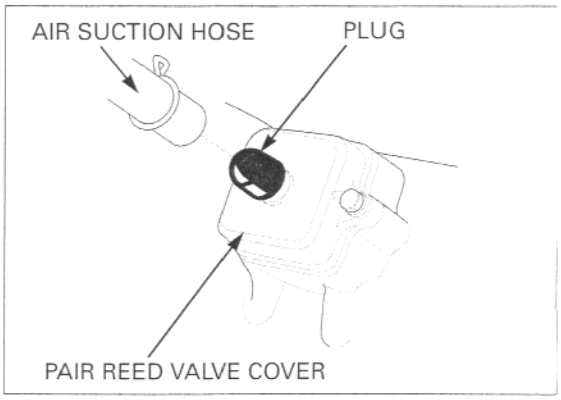

Adjust the idle speed if the idle speed differs from the specified speed.

IDLE SPEED: 1,200 ± 100 rpm

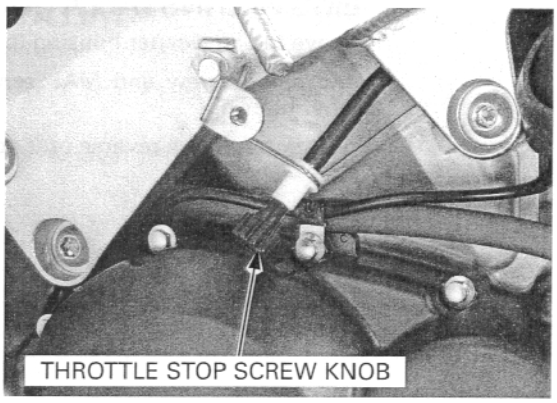

Remove the vacuum gauge from the vacuum hoses. Connect the each cylinder vacuum hose to the 5-way joint.

Reset the ECM self diagnosis data (page 5-8).

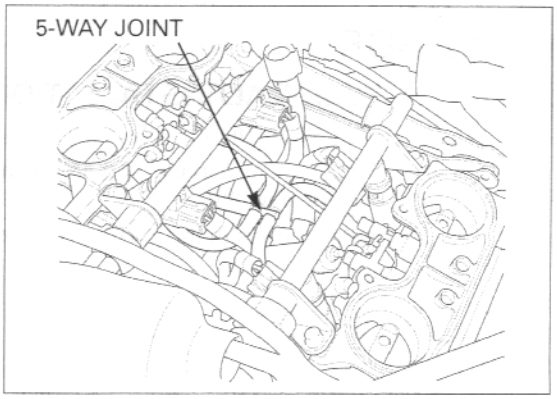

MAP SENSOR

OUTPUT VOLTAGE INSPECTION

Connect the test harness to the ECM (page 5-9).

Measure the voltage at the test harness terminals (page 5-10).

Connection: A4 (+) – B16 (–)
STANDARD: 2.7 – 3.1 V

The MAP sensor output voltage (above) is measured under the standard atmosphere (1 atm = 1,030 hPa).
The MAP sensor output voltage is affected by the distance above sea level, because the output voltage is changed by atmosphere.
Check the sea level measurement and be sure that the measured voltage falls within the specified value.

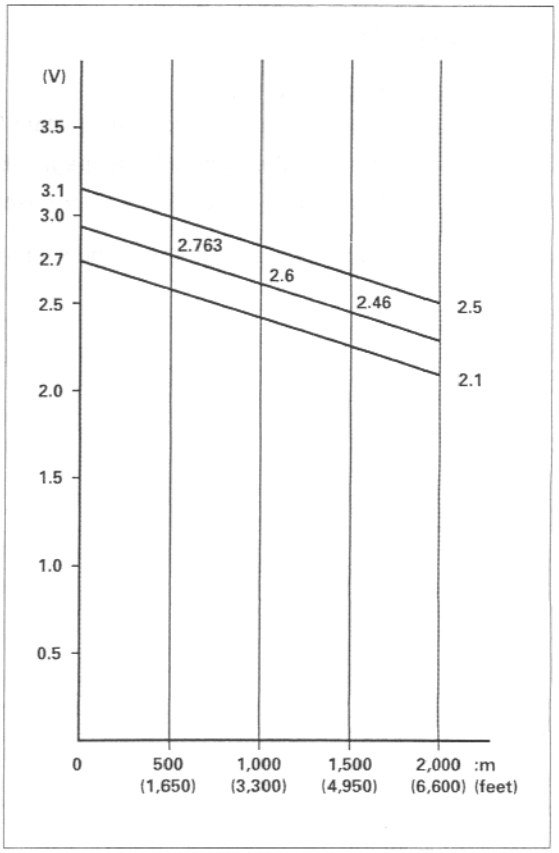

REMOVAL/INSTALLATION

Remove the air cleaner housing (page 5-60).

Remove the screw and MAP sensor from the air cleaner housing.

Installation is in the reverse order of removal.

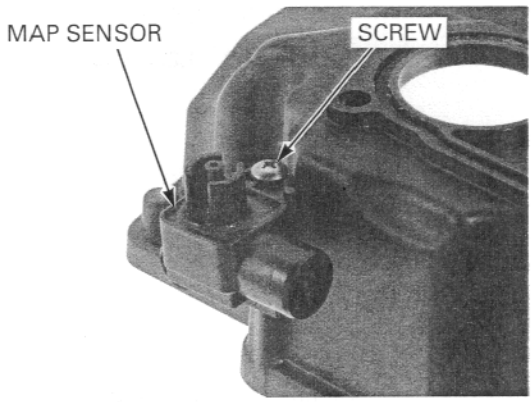

IAT SENSOR

REMOVAL/INSTALLATION

Remove the air cleaner housing (page 5-60).

Remove the screws and IAT sensor from the air cleaner housing.

Installation is in the reverse order of removal.

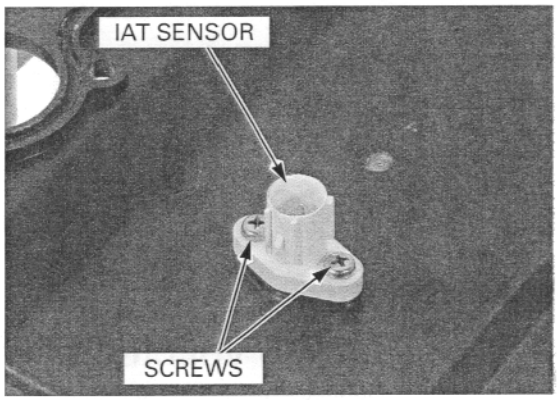

ECT SENSOR

Replace the ECT sensor while the engine is cold.

REMOVAL

Drain the coolant from the system (page 6-6).

Remove the throttle body (page 5-63).

Disconnect the ECT sensor connector from the sensor.

Remove the ECT sensor and sealing washer.

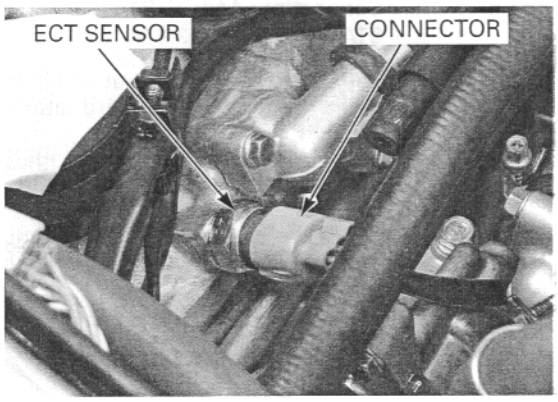

INSTALLATION

Always replace a sealing washer with a new one.

Install the new sealing washer and ECT sensor. Tighten the ECT sensor to the specified torque.

TORQUE: 23 N·m (2.3 kgf·m, 17 lbf·ft)

Connect the ECT sensor connector.

Fill the cooling system with recommended coolant (page 6-6).

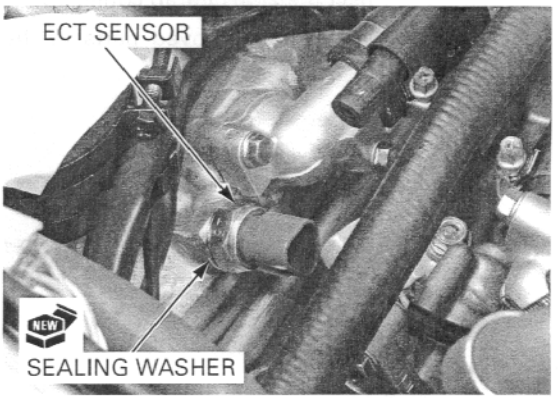

CAM PULSE GENERATOR

REMOVAL

Remove the throttle body (page 5-63).

Disconnect the cam pulse generator 2P (Natural) connector.

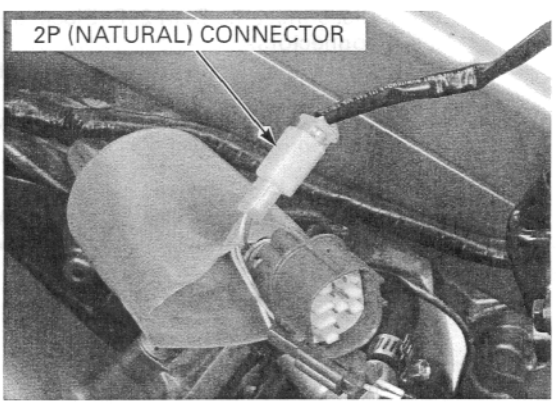

Remove the bolt and cam pulse generator from the rear cylinder head.

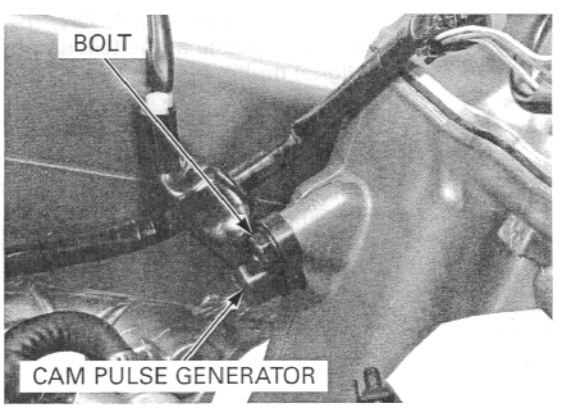

INSTALLATION

Install the new O-ring onto the cam pulse generator. Install the cam pulse generator into the cylinder head.

Install and tighten the mounting bolt securely.

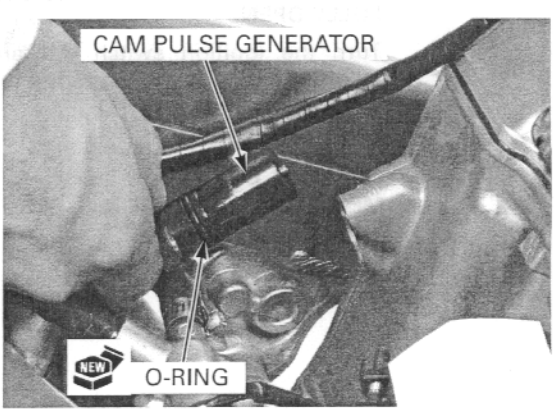

Route the cam pulse generator wire properly, connect the 2P (Natural) connector.

Install the removed parts in the reverse order of removal.

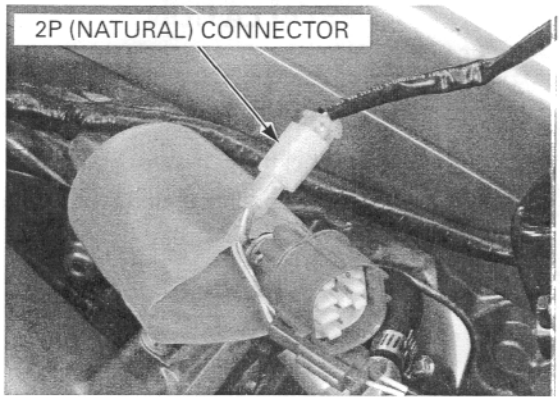

TP SENSOR

INSPECTION

Remove the upper cowl (page 2-12).

Disconnect the ECM 26P (Black) and 26P (Light gray) connectors.
Check the connector for loose or corroded terminals.
Connect the ECU test harness between the ECM and main wire harness.

TOOL:

ECU test harness 26P	**070MZ–0010100 (two required)**

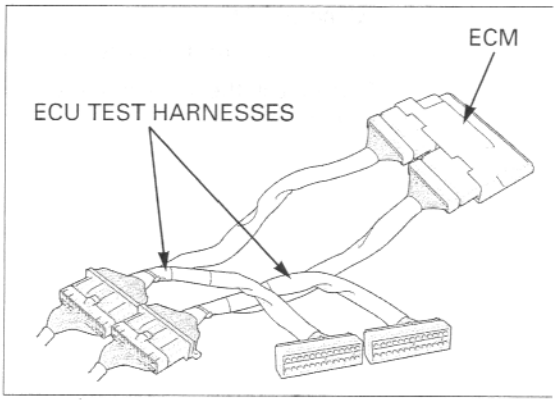

INPUT VOLTAGE INSPECTION

Turn the ignition switch ON, measure and record the input voltage at the test harness terminals using a digital multimeter.

Connection: B13 (+) – B16 (–)
Standard: 4.5 – 5.5 V

If the measurement is out of specification, check the following:
- Loose connection of the ECM multi-connector
- Open circuit in wire harness.

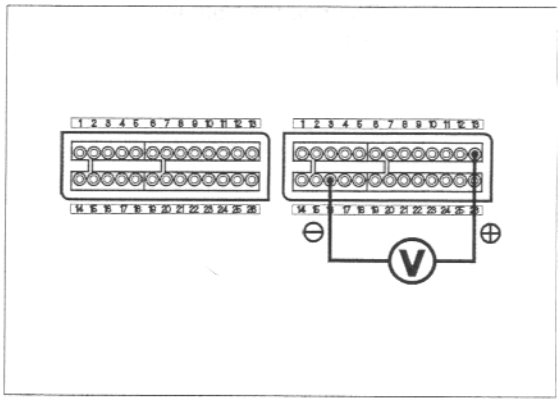

OUTPUT VOLTAGE INSPECTION WITH THROTTLE FULLY OPEN

Turn the ignition switch ON and measure and record the output voltage at the test harness terminals.

Connection:
A16 (+) – B16 (–)
MEASURING CONDITION:
At throttle fully open

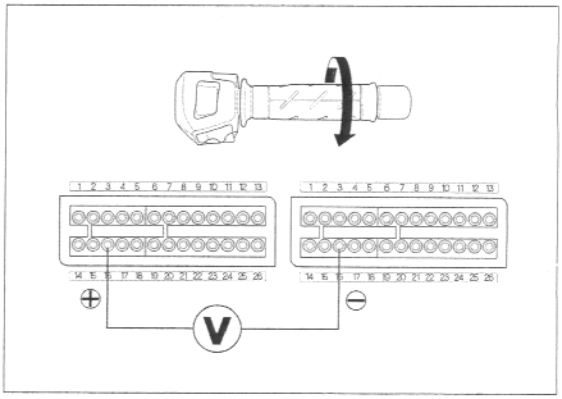

OUTPUT VOLTAGE INSPECTION WITH THROTTLE FULLY CLOSED

Turn the ignition switch ON and measure and record the output voltage with the throttle fully closed.

Connection:
A16 (+) – B16 (–)
MEASURING CONDITION:
At throttle fully close

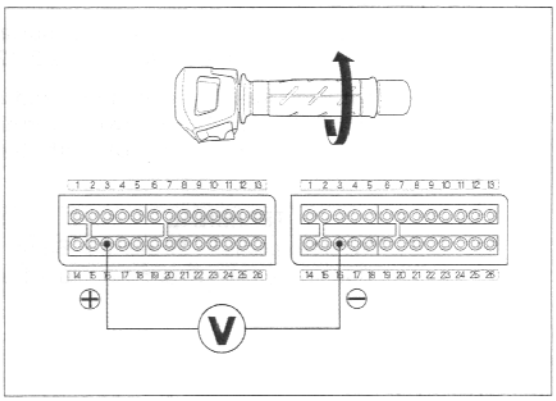

CALCULATE RESULT COMPARISON

Compare the measurement to the result of the following calculation.

With the throttle fully open:
Measured input voltage X 0.824= Vo

The sensor is normal if the measurement output voltage measured in step 2 is within 10% of Vo.

With the throttle fully closed:
Measured input voltage X 0.1= Vc

The sensor is normal if the throttle closed output voltage measured in step 3 is within 10%of Vc.

Using an analog meter, check that the needle of the voltmeter swings slowly when the throttle is opened gradually.

CONTINUITY INSPECTION

Open and support the fuel tank using the equipped tools (page 3-5).

Disconnect the ECM 26P (Black) and 26P (Light gray) connector and the TP sensor 3P connector.
Check for continuity between the ECM and TP sensor.

If there is no continuity, check the open or short circuit in wire harness.

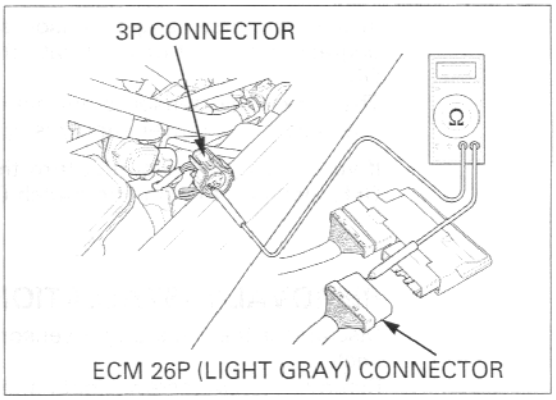

BANK ANGLE SENSOR

INSPECTION

Support the motorcycle level surface.
Remove the upper cowl (page 2-12).

Turn the ignition switch ON and measure the voltage between the following terminals of the bank angle sensor connector with the connector connected.

TERMINAL	STANDARD
White/black (+) – Green (–)	Battery voltage
Red/white (+) – Green (–)	0 – 1 V

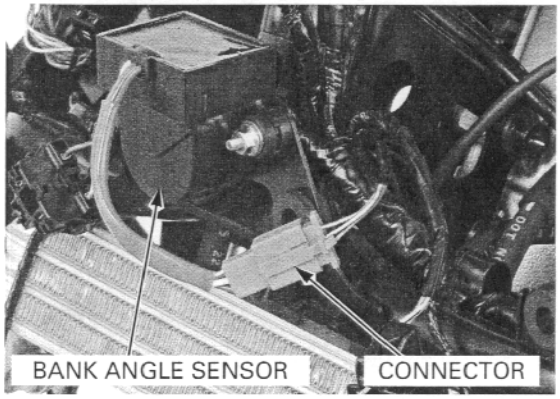

Turn the ignition switch OFF.

Do not disconnect the bank angle sensor connector during inspection.

Remove the screws/nuts and bank angle sensor.

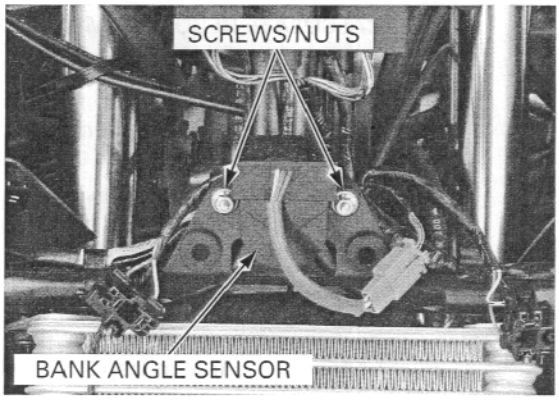

Place the bank angle sensor horizontal as shown, and ignition switch ON.

The bank angle sensor is normal if the engine stop relay clicks and power supply is closed.

Incline the bank angle sensor approximately 60 degrees to the left or right with the ignition switch ON.
The bank angle sensor is normal if the engine stop relay clicks and power supply is open.

If you repeat this test, first turn the ignition switch OFF, then turn the ignition switch ON.

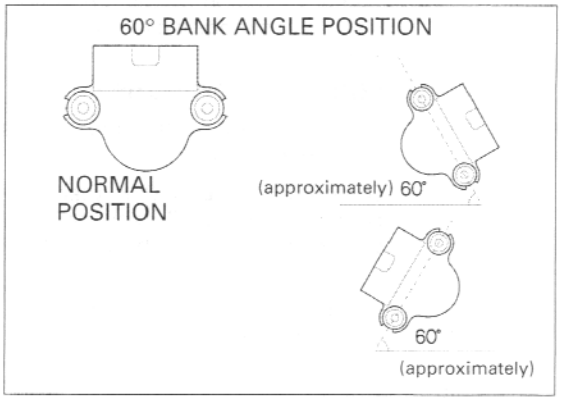

REMOVAL/INSTALLATION

Disconnect the bank angle sensor 3P (Green) connector.
Remove the two screws, nuts and bank angle sensor.

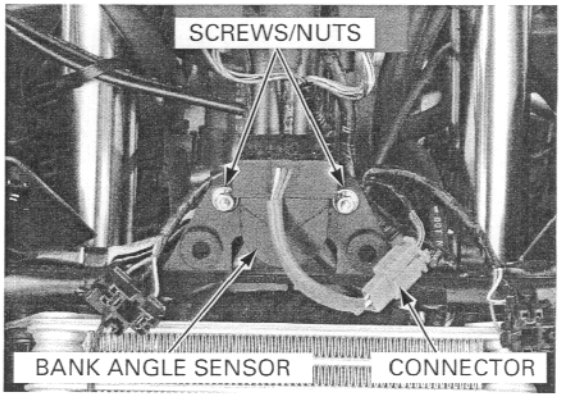

Install the bank angle sensor with its "UP" mark facing up.

Installation is in the reverse order of removal.

Tighten the mounting screws/nuts securely.

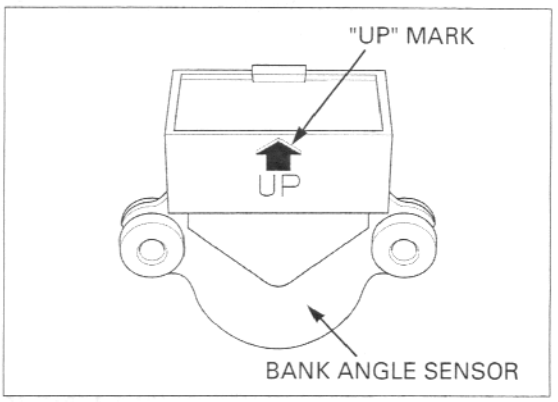

ENGINE STOP RELAY

INSPECTION

Remove the upper cowl (page 2-12).

Disconnect the engine stop relay 4P connector, remove the engine stop relay.

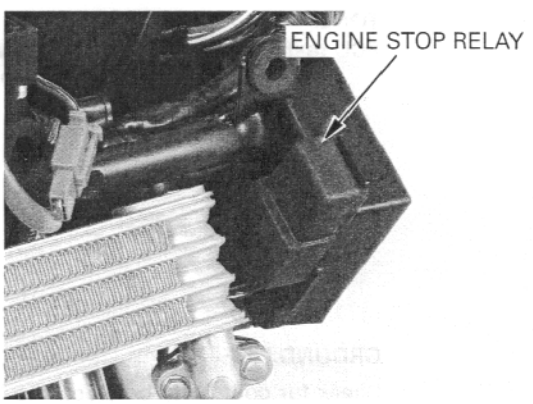

Connect the ohmmeter to the engine stop relay connector terminals.

Connection: Black/pink – Black/white

Connect the 12 V battery to the following engine stop relay connector terminals.

Connection: Red/orange – Black

There should be continuity only when the 12 V battery is connected.
If there is no continuity when the 12 V battery is connected, replace the engine stop relay.

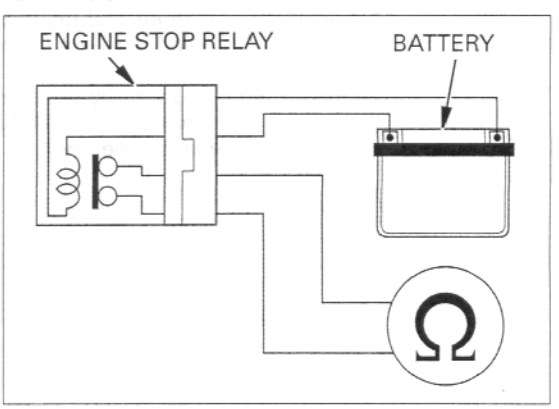

ECM (ENGINE CONTROL MODULE)

REMOVAL/INSTALLATION

Remove the upper cowl (page 2-12).

Remove the bolt and ECM cover.

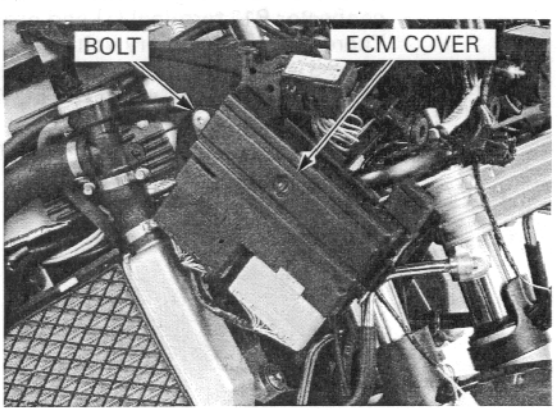

Disconnect the ECM 26P (Black) and 26P (Light gray) connectors.

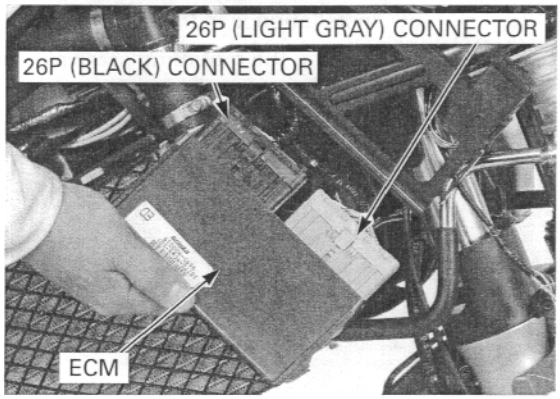

POWER/GROUND LINE INSPECTION

Connect the test harness between the main wire harness and ECM (page 5-9).

TOOL:

ECU test harness 26P	**070MZ-0010100 (two required)**

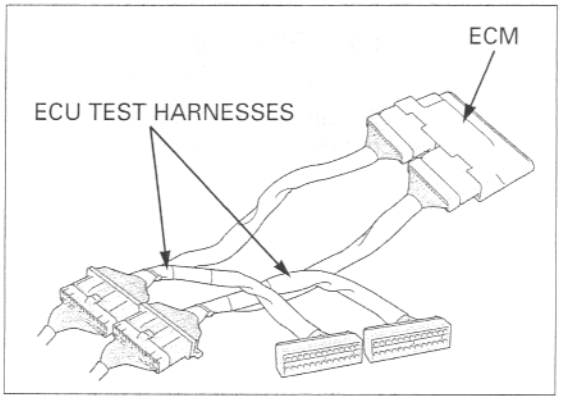

GROUND LINE

Check for continuity between the ECM test harness connector B1 terminal and ground, between the B2 terminal and ground, and between the B14 terminal and ground.
There should be continuity at all times.
If there is no continuity, check for open circuit in Green/Pink wire and Green wire.

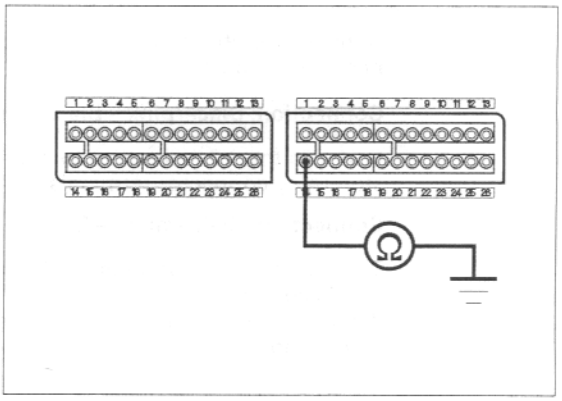

POWER INPUT LINE

Turn the ignition switch ON with the engine stop switch in RUN position.
Measure the voltage between the ECM test harness connector B12 terminal (+) and ground.
There should be battery voltage.
If there is no voltage, check for an open circuit in the Black/White wire between the ECM and bank angle sensor/relay.
If the wire is OK, check the bank angle sensor/relay (page 5-82).

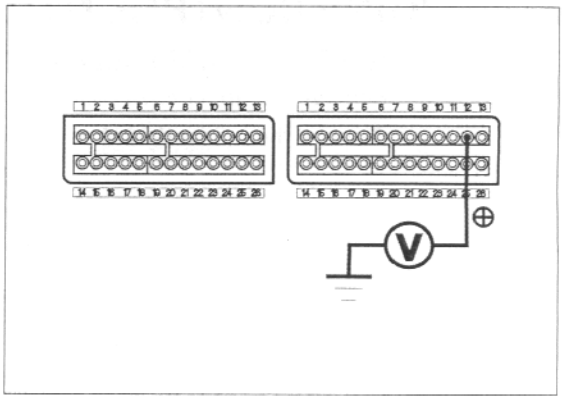

VARIABLE AIR INTAKE CONTROL VALVE

INSPECTION

Support the motorcycle on its center stand with the transmission is in neutral.

Open and support the fuel tank using the equipped tools (page 3-5).

Disconnect the neutral switch connector from the switch.

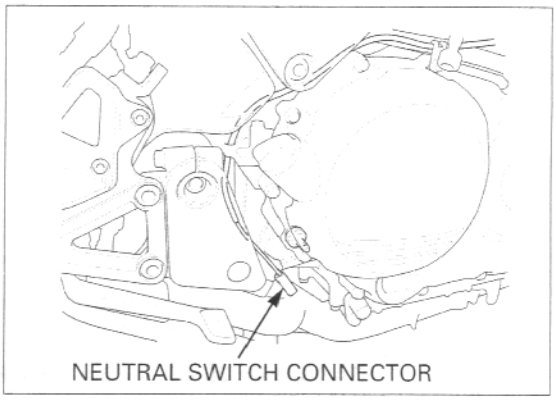

Start the engine.

Check the operation of the variable air intake port.

With the engine speed above 5,500 rpm, the variable air intake port is open.
With the engine speed below 5,000 rpm, the variable air intake port is closed.

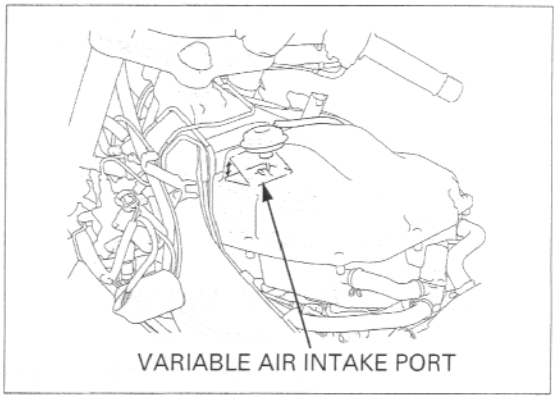

If the operation of the variable air intake port is incorrect, inspect the following:

- Diaphragm damage
- Vacuum hose leakage
- Loose or poor contact on the vacuum hose
- Bypass control solenoid valve (page 5-85)
- Loose or poor contact on the bypass control solenoid valve connector
- Open or short circuit between the bypass control solenoid valve and the ECM
- One-way valve and/or vacuum chamber damage (page 5-86)

BYPASS CONTROL SOLENOID VALVE

Removal/Installation

Remove the air cleaner housing (page 5-60).

Disconnect the vacuum hoses from the bypass control solenoid valve.
Remove the screw and bypass control solenoid valve from the air cleaner housing.

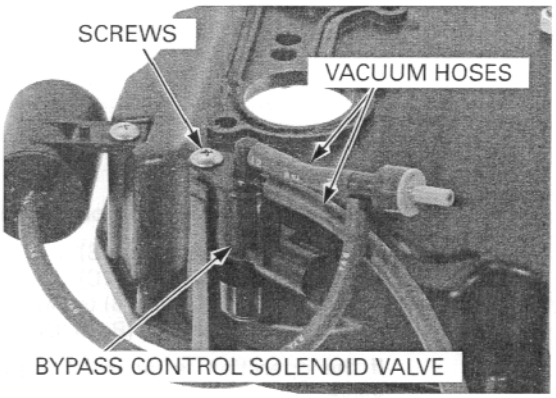

Inspection

Remove the bypass control solenoid valve.

Check that the air should flow (A) to (B), only when the 12V battery is connected to the bypass control solenoid valve terminal.

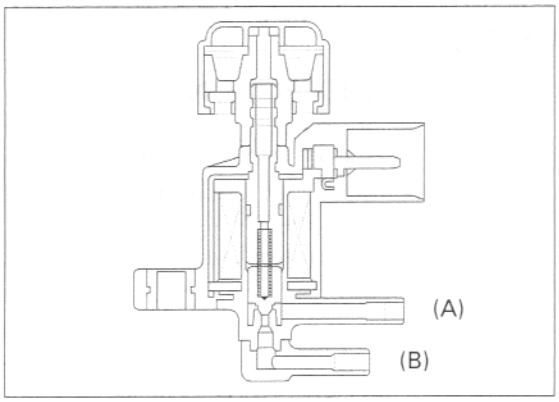

Check the resistance between the terminals of the bypass control solenoid valve.

STANDARD: 28 – 32 Ω (20 °C/68 °F)

If the resistance is out of specification, replace the bypass control solenoid valve.

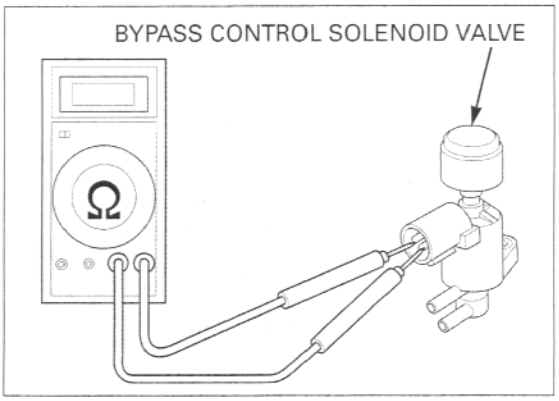

ONE-WAY VALVE

Removal/Installation

Remove the air cleaner housing (page 5-60).

Disconnect the vacuum hose and the one-way valve.

Route the vacuum hoses correctly.

Installation is in the reverse order of removal.

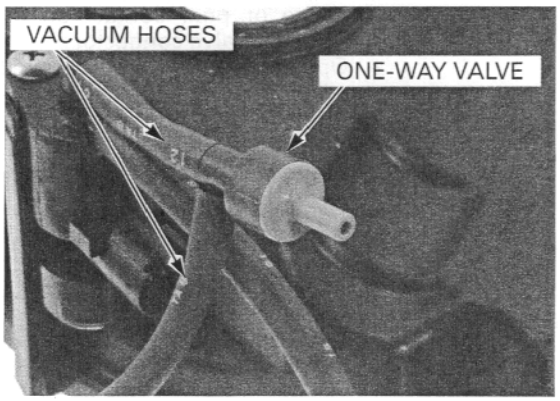

Inspection

Check the one-way valve operation as follows:

- Air should flow (A) to (B)
- Air should flow (A) to (C)
- Air should not flow (B) to (A)
- Air should not flow (B) to (C)

If the operation is incorrect, replace the one-way valve.

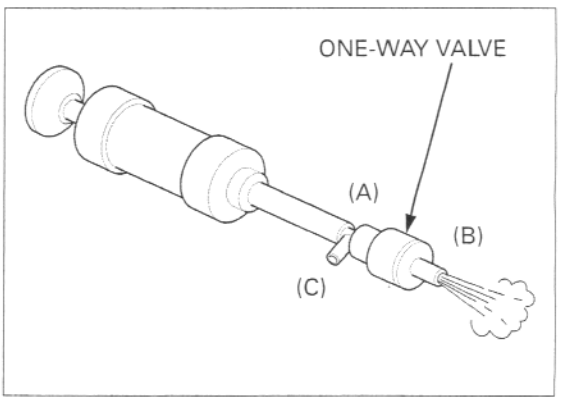

VACUUM CHAMBER

Removal/Installation

Remove the air cleaner housing (page 5-60).

Disconnect the vacuum hose from the vacuum chamber.
Remove the screw and vacuum chamber from the air cleaner housing.

Inspection

Check the vacuum chamber for damage and scratches, replace if necessary.

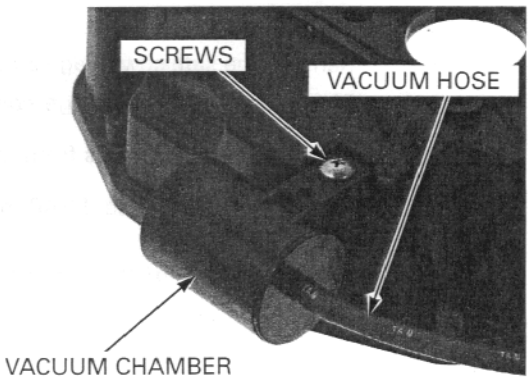

PAIR SOLENOID VALVE

REMOVAL/INSTALLATION

Disconnect the PAIR solenoid valve 2P (Natural) connector.

Disconnect the PAIR air suction hoses.
Remove the PAIR solenoid valve from the air cleaner housing.

Installation is in the reverse order of removal.

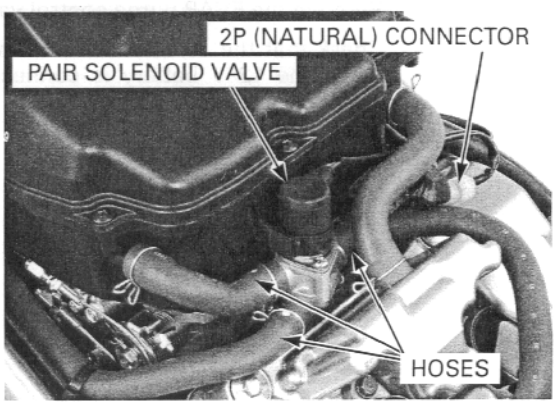

INSPECTION

Remove the PAIR solenoid valve.

Check that the air should not flow (A) to (B), only when the 12 V battery is connected to the PAIR solenoid valve terminals.

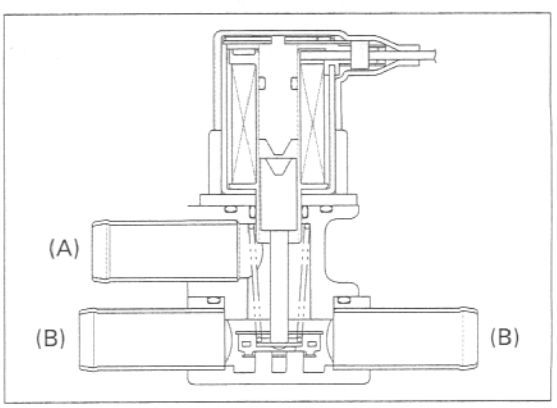

Check the resistance between the terminals of the PAIR solenoid valve.

STANDARD: 20 – 24 Ω (20 °C/68 °F)

If the resistance is out of specification, replace the PAIR solenoid valve.

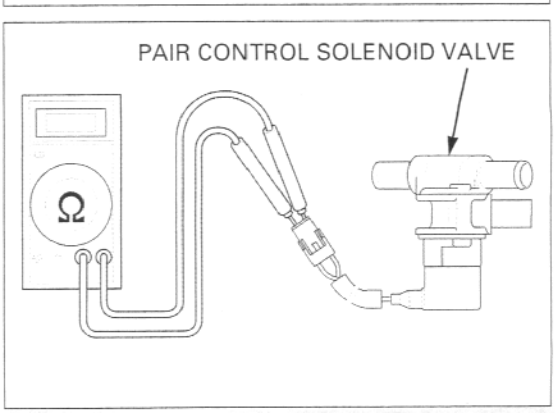

EVAP PURGE CONTROL SOLENOID VALVE (CALIFORNIA TYPE ONLY)

REMOVAL

Remove the side cowl (page 2-8).

Disconnect the EVAP purge control solenoid valve 2P connector.
Disconnect the air hoses from the EVAP purge control valve.
Remove the bolt and EVAP purge control valve bracket assembly.

Installation is in the reverse order of removal.

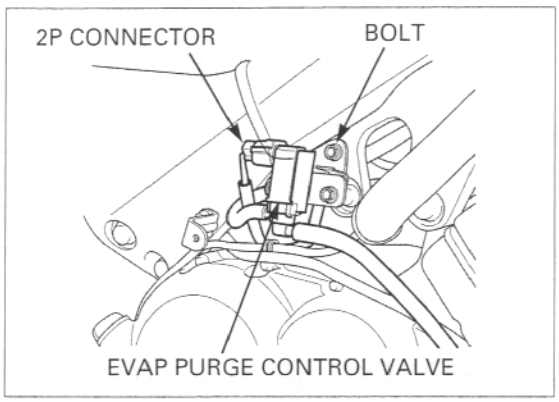

INSPECTION

Remove the EVAP purge control valve.

Check that the air should not flow (A) to (B), only when the 12 V battery is connected to the EVAP purge control valve terminals.

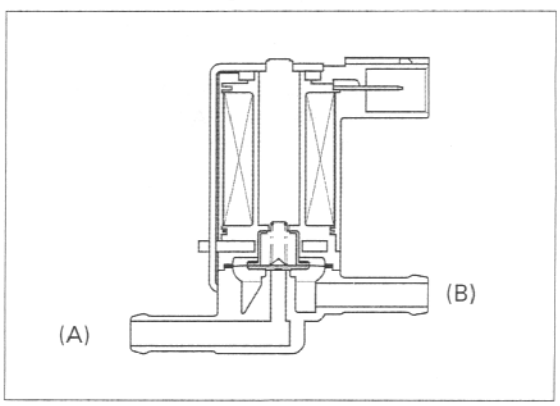

Check the resistance between the terminals of the EVAP purge control valve connector.

STANDARD: 30 – 34 Ω (20°C/68°F)

If the resistance is out of specification, replace the EVAP purge control valve.

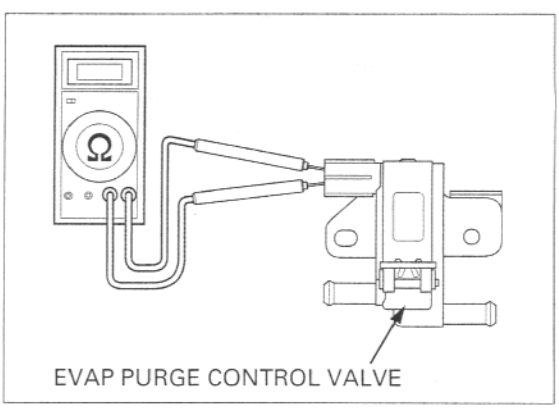

VTEC SPOOL VALVE

REMOVAL

Clean the crankcase around the VTEC solenoid valve to prevent debris from falling into the VTEC oil line.

Remove the throttle body (page 5-63).

Disconnect the VTEC solenoid valve connector.

Remove the three bolts and VTEC spool valve assembly.

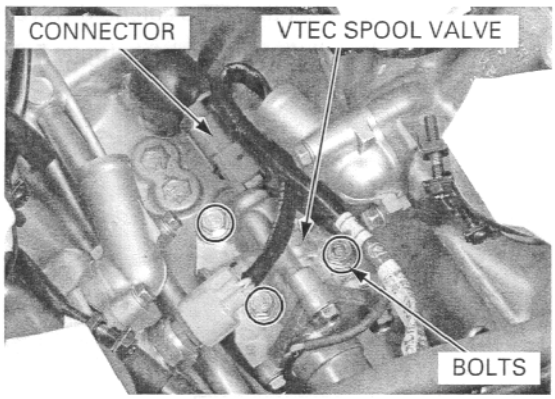

Remove the O-ring/oil strainer assembly from the VTEC spool valve body.

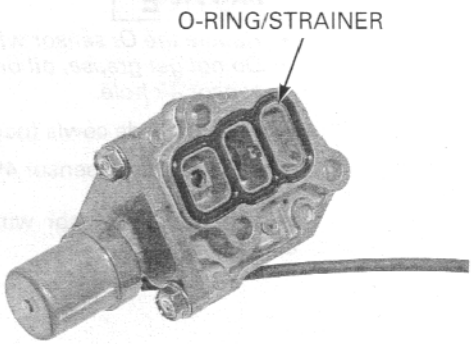

INSPECTION

Clean the oil strainer.

Check the O-ring for fatigue or damage.

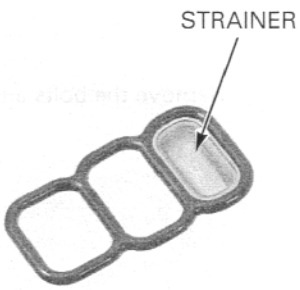

INSTALLATION

Install the O-ring/oil strainer into the groove of the VTEC spool valve body.

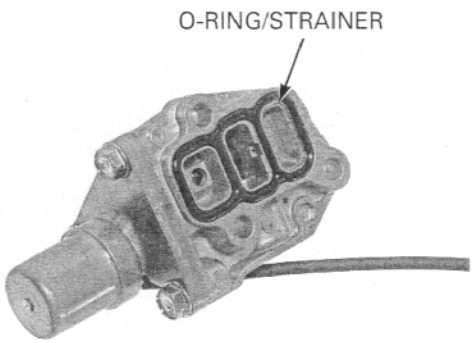

Install the VTEC spool valve assembly onto the crankcase.

Tighten the three bolts securely.

Connect the VTEC solenoid valve connector.

Install the throttle body (page 5-67).

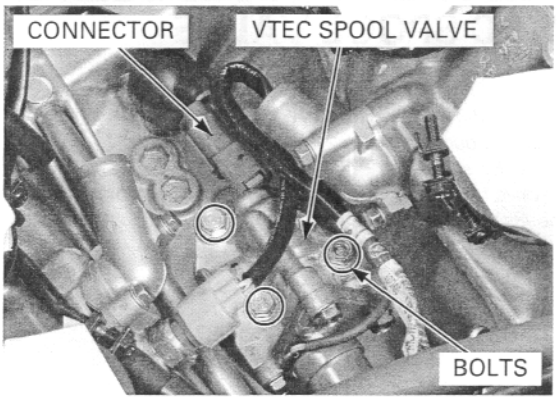

O_2 SENSOR

Do not service the O_2 sensor while it is hot.

REMOVAL

NOTICE

- *Handle the O_2 sensor with care.*
- *Do not get grease, oil or other materials in the O_2 sensor air hole.*

Remove the side cowls (page 2-8).

Disconnect the O_2 sensor 4P (Natural) and 4P (Black) connectors.
Release the O_2 sensor wires from the wire clamp and water hoses.

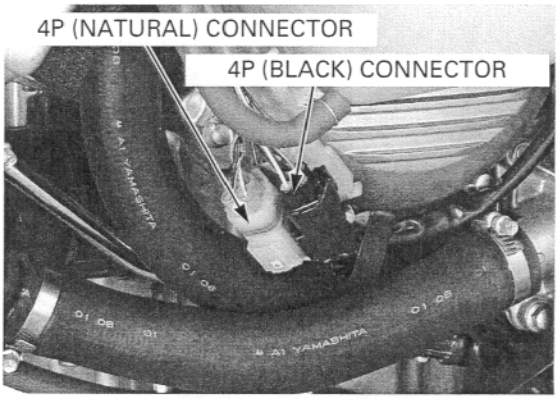

Remove the bolts and O_2 sensor protector.

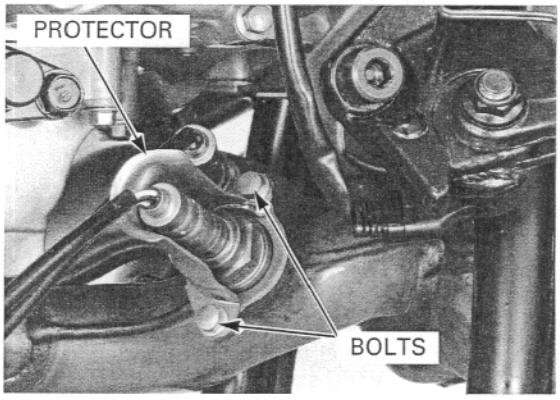

Remove the O_2 sensor units using the special tool.

TOOL:
O_2 sensor wrench **07LAA–PT50101**

NOTICE

- *Be careful not to damage the sensor wire.*
- *Do not use an impact wrench while removing or installing the O_2 sensor.*

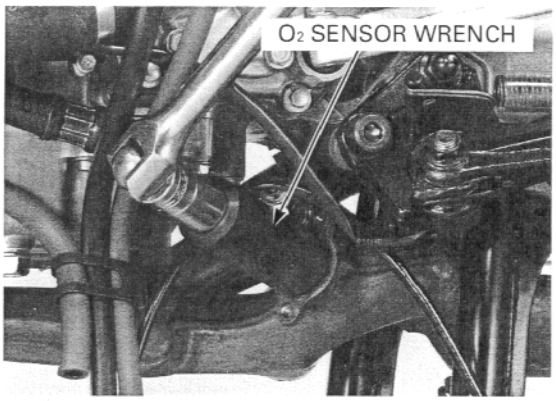

Install the O_2 sensor unit.
Tighten the unit to the specified torque using the special tool.

TOOL:
O_2 sensor wrench **07LAA–PT50101**

TORQUE: 25 N·m (2.6 kgf·m, 19 lbf·ft)

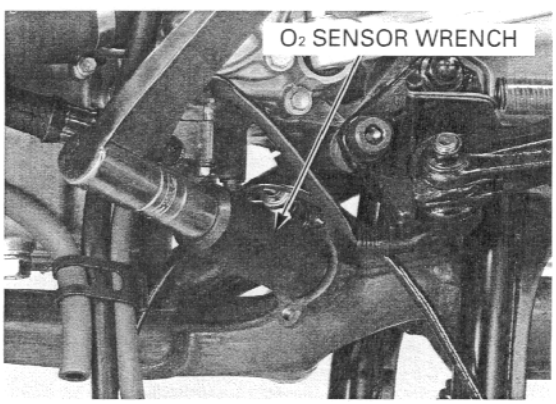

Install the O_2 sensor protector and tighten the bolts securely.

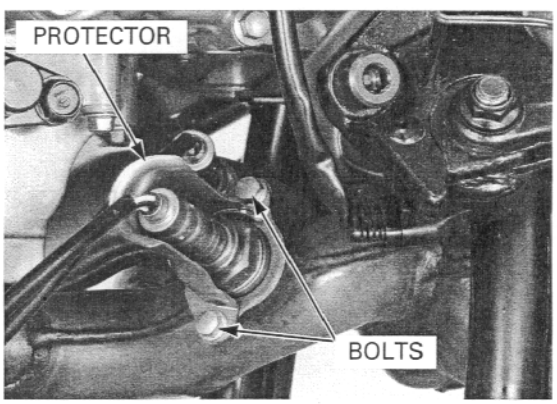

Route the O_2 sensor wire properly (page 1-25).
Clamp the wires with the wire clamp.

Connect the O_2 sensor 4P (Natural) and 4P (Black) connectors.

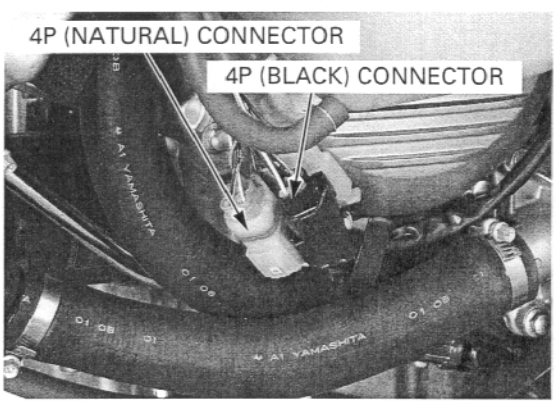

MEMO

6. COOLING SYSTEM

SYSTEM FLOW PATTERN 6-2
SERVICE INFORMATION 6-3
TROUBLESHOOTING 6-4
SYSTEM TESTING 6-5
COOLANT REPLACEMENT 6-6
THERMOSTAT 6-8
RADIATOR 6-13
RADIATOR RESERVE TANK 6-17
WATER PUMP 6-18

SYSTEM FLOW PATTERN

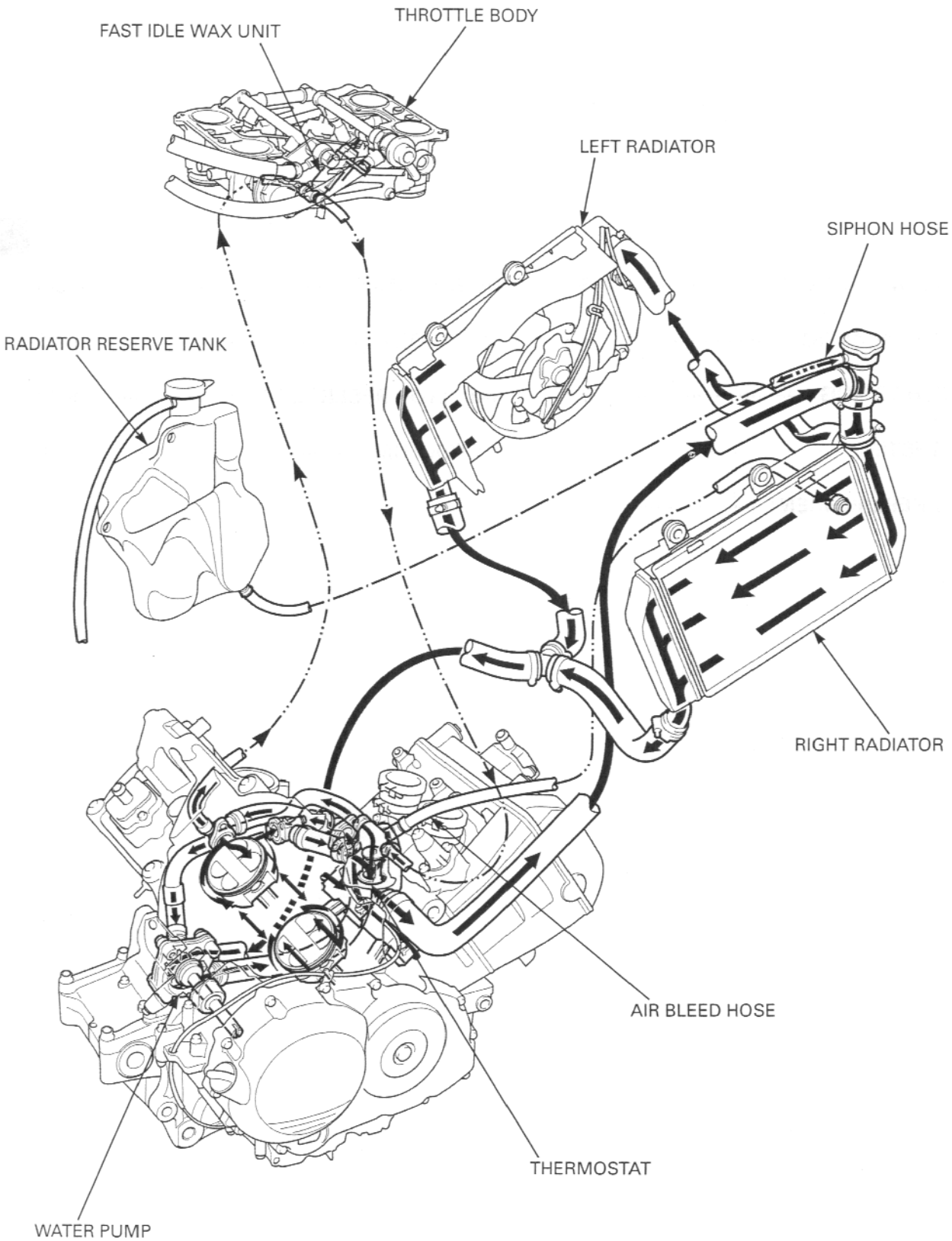

SERVICE INFORMATION

GENERAL

⚠WARNING

Removing the radiator cap while the engine is hot can allow the coolant to spray out, seriously scalding you. Always let the engine and radiator cool down before removing the radiator cap.

NOTICE

Using coolant with silicate inhibitors may cause premature wear of water pump seals or blockage of radiator passages. Using tap water may cause engine damage.

- Add cooling system at the reserve tank. Do not remove the radiator cap except to refill or drain the system.
- All cooling system services can be done with the engine in the frame.
- Avoid spilling coolant on painted surfaces.
- After servicing the system, check for leaks with a cooling system tester
- Refer to the fan motor switch inspection (page 20-17) and coolant temperature sensor inspection (page 20-16).

SPECIFICATIONS

ITEM		SPECIFICATIONS
Coolant capacity	Radiator and engine	2.92 liter (3.08 US qt, 2.57 Imp qt)
	Reserve tank	0.9 liter (0.95 US qt, 0.79 Imp qt)
Radiator cap relief pressure		108 – 137 kPa (1.1 – 1.4 kgf/cm^2, 16 – 20 psi)
Thermostat	Begin to open	80 – 84 °C (176 – 183 °F)
	Fully open	95 °C (203 °F)
	Valve lift	8 mm (0.3 in) minimum
Recommended antifreeze		High quality ethylene glycol antifreeze containing corrosion protection inhibitors
Standard coolant concentration		50 % mixture with soft water

TORQUE VALUES

Water pump cover flange bolt	13 N·m (1.3 kgf·m, 9 lbf·ft)	CT bolt
Cooling fan mounting nut	3 N·m (0.27 kgf·m, 2.0 lbf·ft)	Apply a locking agent to the threads
Fan motor mounting nut	5 N·m (0.5 kgf·m, 3.6 lbf·ft)	
ECT sensor	23 N·m (2.3 kgf·m, 17 lbf·ft)	
Fan motor switch	18 N·m (1.8 kgf·m, 13 lbf·ft)	

TROUBLESHOOTING

Engine temperature too high
- Faulty temperature gauge or ECT sensor
- Thermostat stuck closed
- Faulty radiator cap
- Insufficient coolant
- Passage blocked in radiator,hoses or water jacket
- Air in system
- Faulty cooling fan motor
- Faulty fan motor switch
- Faulty water pump

Engine temperature too low
- Faulty temperature gauge or ECT sensor
- Thermostat stuck open
- Faulty cooling fan motor switch

Coolant leak
- Faulty water pump mechanical seal
- Deteriorated O-rings
- Faulty radiator cap
- Damaged or deteriorated cylinder head gasket
- Loose hose connection or clamp
- Damaged or deteriorated hose

SYSTEM TESTING

COOLANT (HYDROMETER TEST)

Remove the side cowl (page 2-8).

Remove the radiator cap.

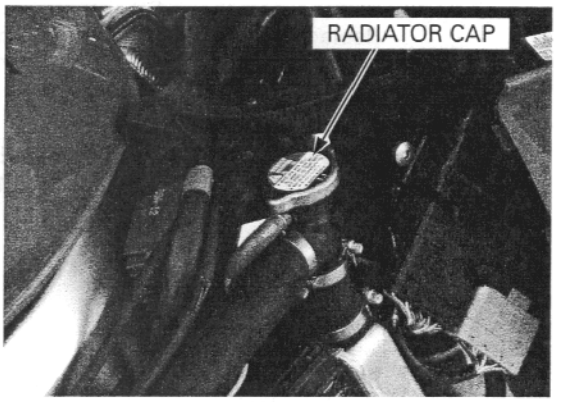

Test the coolant gravity using a hydrometer (see below for "Coolant gravity chart").
For maximum corrosion protection, a 50 – 50% solution of ethylene glycol and distilled water is recommended (page 6-6).
Look for contamination and replace the coolant if necessary.

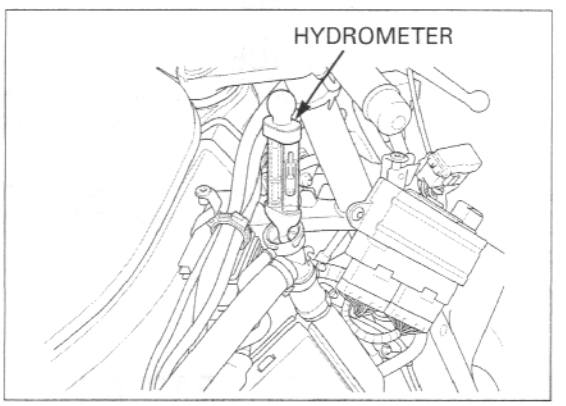

COOLANT GRAVITY CHART

		Coolant temperature °C (°F)										
		0 (32)	5 (41)	10 (50)	15 (59)	20 (68)	25 (77)	30 (86)	35 (95)	40 (104)	45 (113)	50 (122)
Coolant ratio%	5	1.009	1.009	1.008	1.008	1.007	1.006	1.005	1.003	1.001	0.999	0.997
	10	1.018	1.017	1.017	1.016	1.015	1.014	1.013	1.011	1.009	1.007	1.005
	15	1.028	1.027	1.026	1.025	1.024	1.022	1.020	1.018	1.016	1.014	1.012
	20	1.036	1.035	1.034	1.033	1.031	1.029	1.027	1.025	1.023	1.021	1.019
	25	1.045	1.044	1.043	1.042	1.040	1.038	1.036	1.034	1.031	1.028	1.025
	30	1.053	1.052	1.051	1.047	1.046	1.045	1.043	1.041	1.038	1.035	1.032
	35	1.063	1.062	1.060	1.058	1.056	1.054	1.052	1.049	1.046	1.043	1.040
	40	1.072	1.070	1.068	1.066	1.064	1.062	1.059	1.056	1.053	1.050	1.047
	45	1.080	1.078	1.076	1.074	1.072	1.069	1.066	1.063	1.060	1.057	1.054
	50	1.086	1.084	1.082	1.080	1.077	1.074	1.071	1.068	1.065	1.062	1.059
	55	1.095	1.093	1.091	1.088	1.085	1.082	1.079	1.076	1.073	1.070	1.067
	60	1.100	1.098	1.095	1.092	1.089	1.086	1.083	1.080	1.077	1.074	1.071

RADIATOR CAP/SYSTEM PRESSURE INSPECTION

Before installing the cap in the tester, wet the sealing surfaces.

Remove the radiator cap (page 6-5).

Pressure test the radiator cap.
Replace the radiator cap if it does not hold pressure, or if relief pressure is too high or too low.
If must hold the specified pressure for at least 6 seconds.

RADIATOR CAP RELIEF PRESSURE:
108 – 137 kPa (1.1 – 1.4 kgf/cm², 16 – 20 psi)

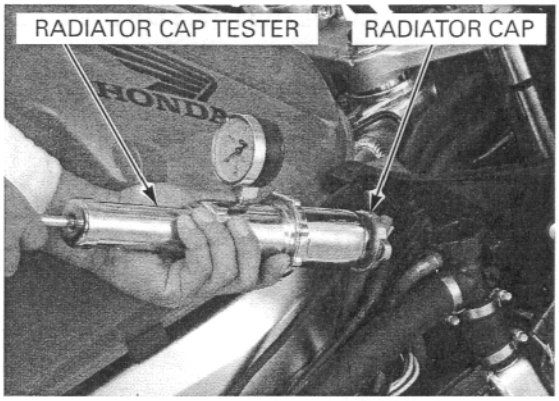

Pressure test the radiator, engine and hoses, and check for leaks.

NOTICE

Excessive pressure can damage the cooling system components. Do not exceed 137 kPa (1.4 kgf/cm², 20 psi).

Repair or replace components if the system will not hold the specified pressure for at least 6 seconds.

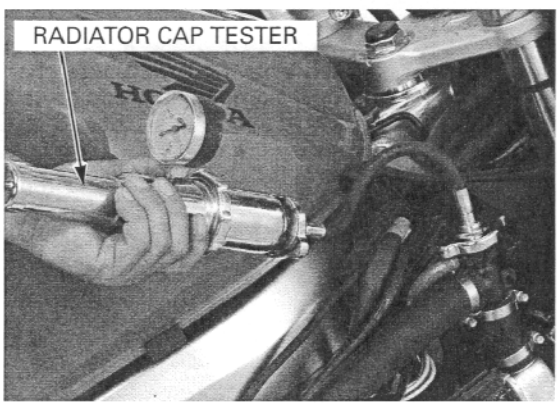

COOLANT REPLACEMENT

PREPARATION

- The effectiveness of coolant decreases with the accumulation of rust or if there is a change in the mixing proportion during usage. Therefore, for best performance change the coolant regularly as specified in the maintenance schedule.
- Mix only distilled, low mineral water with the antifreeze.

RECOMMENDED ANTIFREEZE:
High quality ethylene glycol antifreeze containing corrosion protection inhibitors

RECOMMENDED MIXTURE:
50 – 50 (Distilled water and antifreeze)

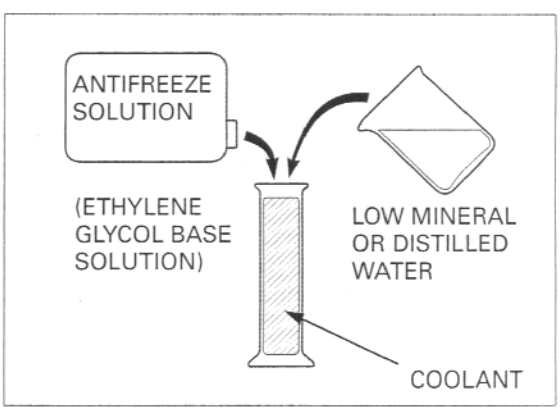

REPLACEMENT/AIR BLEEDING

When filling the system or reserve tank with a coolant (checking coolant level), place the motorcycle in a vertical position on a flat, level surface.

Remove the side cowl (page 2-8).

Remove the radiator cap.

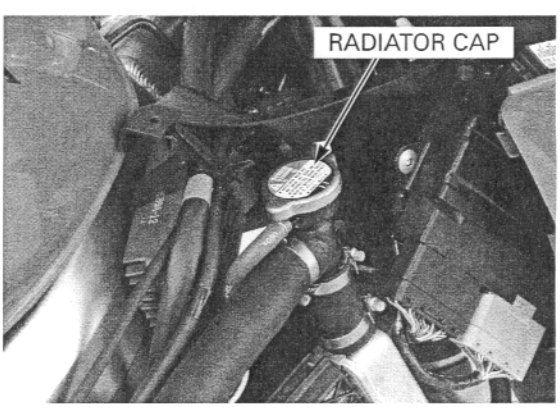

Remove the drain bolt on the water pump cover and drain the system coolant.

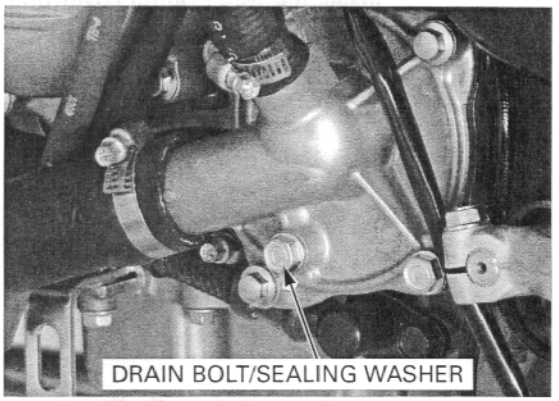

Remove the cylinder drain bolt and drain the coolant from the cylinder.

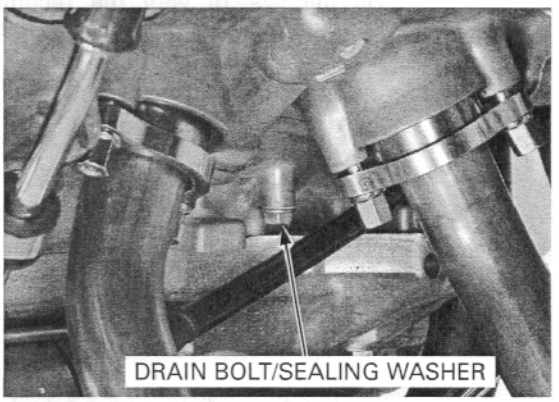

Remove the radiator reserve tank mounting bolt. Drain the reserve tank coolant from the filler neck. Empty the coolant and rinse the inside of the reserve tank with water.

Reinstall the radiator reserve tank.

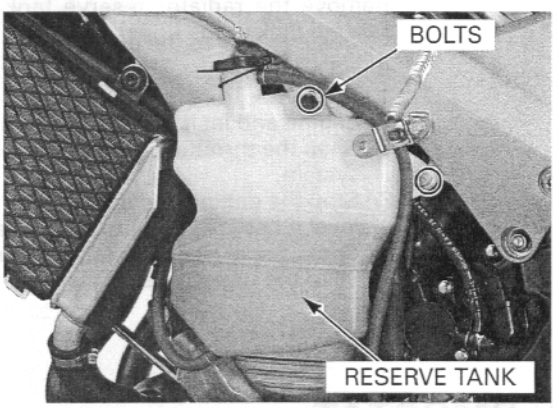

Install the cylinder drain bolt with a new sealing washer, and tighten the bolt securely.

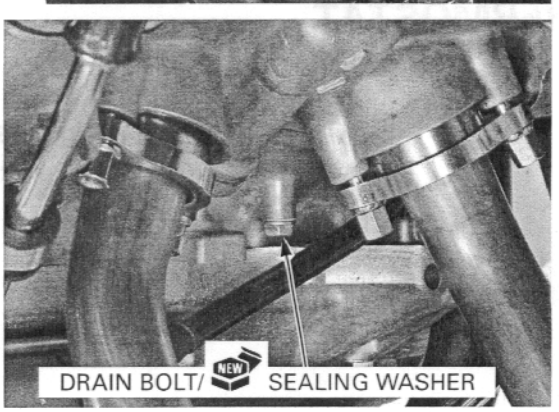

Install the water pump cover drain bolt with a new sealing washer, and tighten the bolt securely.

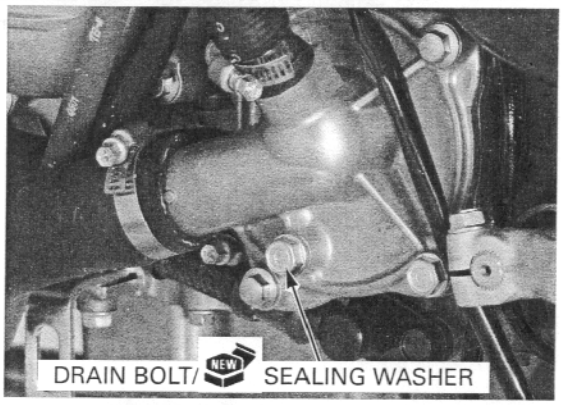

Fill the system with the recommended coolant through the filler opening up to filler neck.

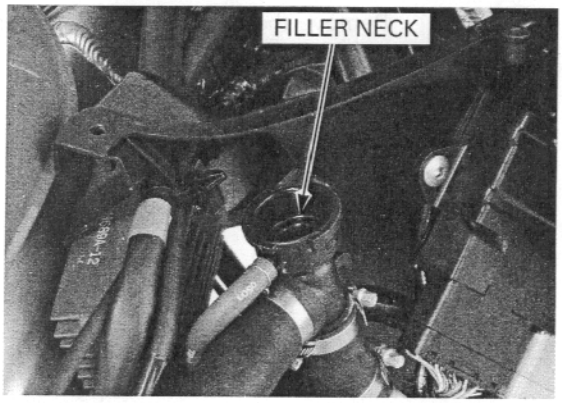

Remove the radiator reserve tank cap and fill the reserve tank to the upper level line.

Bleed air from the system as follows:

1. Shift the transmission into neutral. Start the engine and let it idle for 2 – 3 minutes.
2. Snap the throttle 3 – 4 times to bleed air from the system.
3. Stop the engine and add coolant up to the proper level if necessary. Reinstall the radiator cap.
4. Check the level of coolant in the reserve tank and fill to the upper level if it is low.

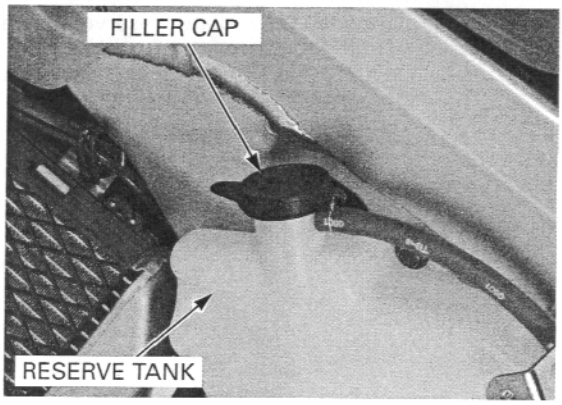

THERMOSTAT

REMOVAL

Drain the coolant (page 6-6).
Remove the throttle body (page 5-63).

Disconnect the bypass hose from the water pump cover.

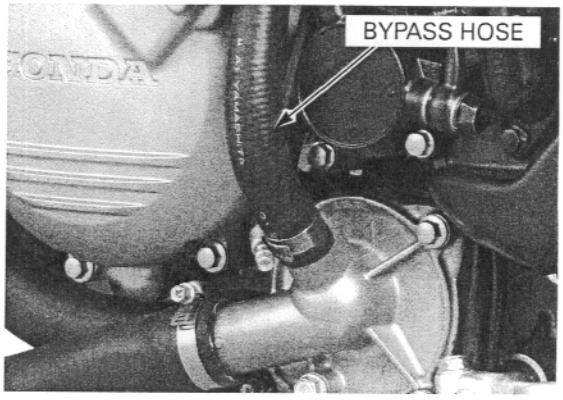

Loosen the water hose clamp screws.

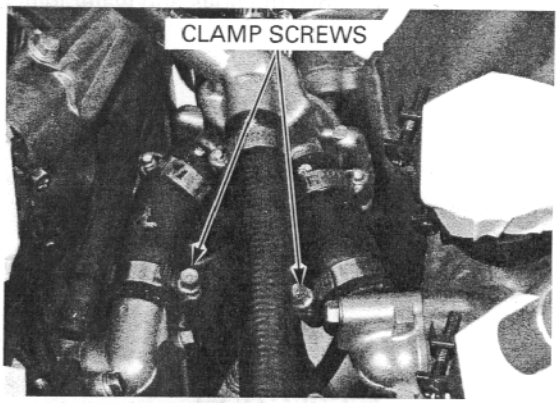

Loosen the upper radiator hose clamp screw. Disconnect the upper radiator hose and air bleed hose from the thermostat housing.

Disconnect the water hoses from the water joints, then remove the housing.

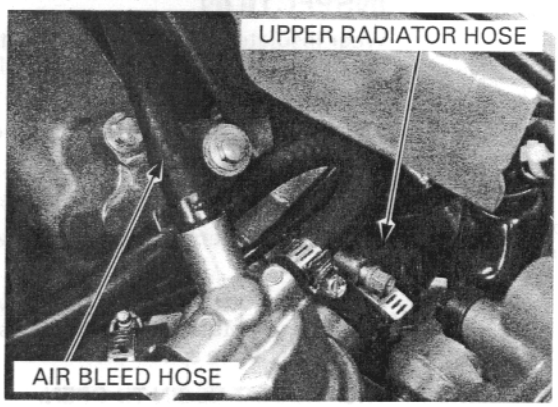

Remove the bolts, thermostat housing cover and O-ring.

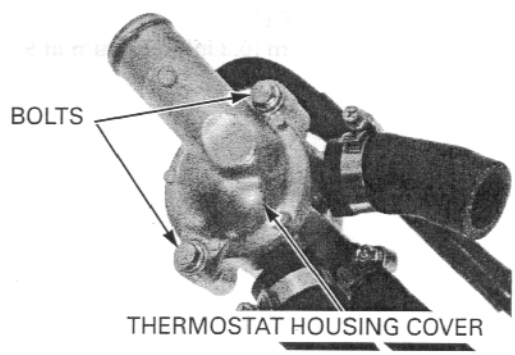

Remove the thermostat from the housing.

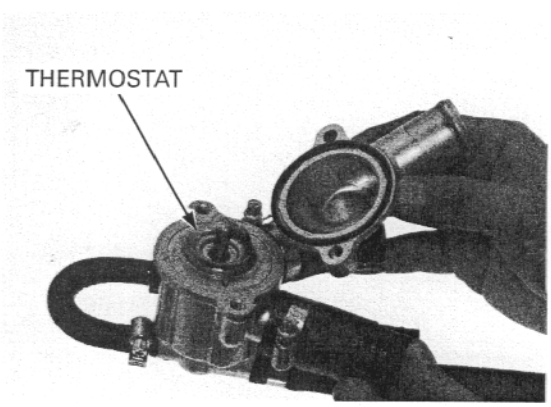

Remove the bolts and water joints.

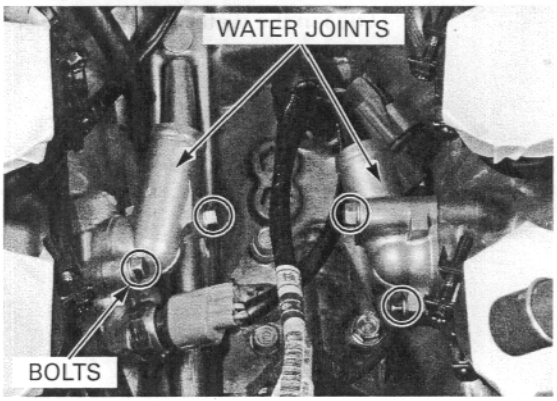

INSPECTION

Wear insulated gloves and adequate eye protection. Keep flammable materials away from the electric heating element.

Visually inspect the thermostat for damage.

Do not let the thermostat or thermometer touch the pan, or you will get a false reading.

Heat the water with an electric heating element to operating temperature for 5 minutes.

Suspend the thermostat in heated water to check its operation.

Replace the thermostat if the valve stays open at room temperature, or if it responds at temperatures other than those specified.

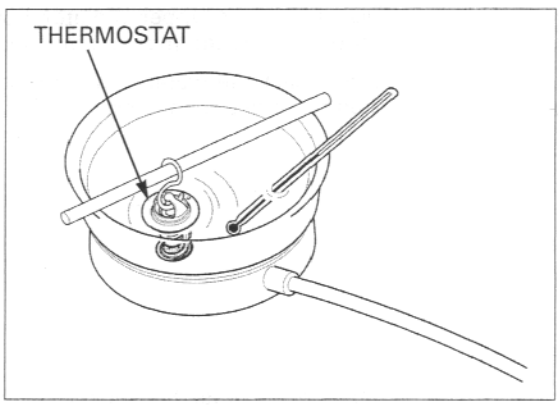

THERMOSTAT BEGIN TO OPEN:
80 – 84 °C (176 – 183 °F)

VALVE LIFT:
8 mm (0.3 in) minimum at 95 °C (203 °F)

INSTALLATION

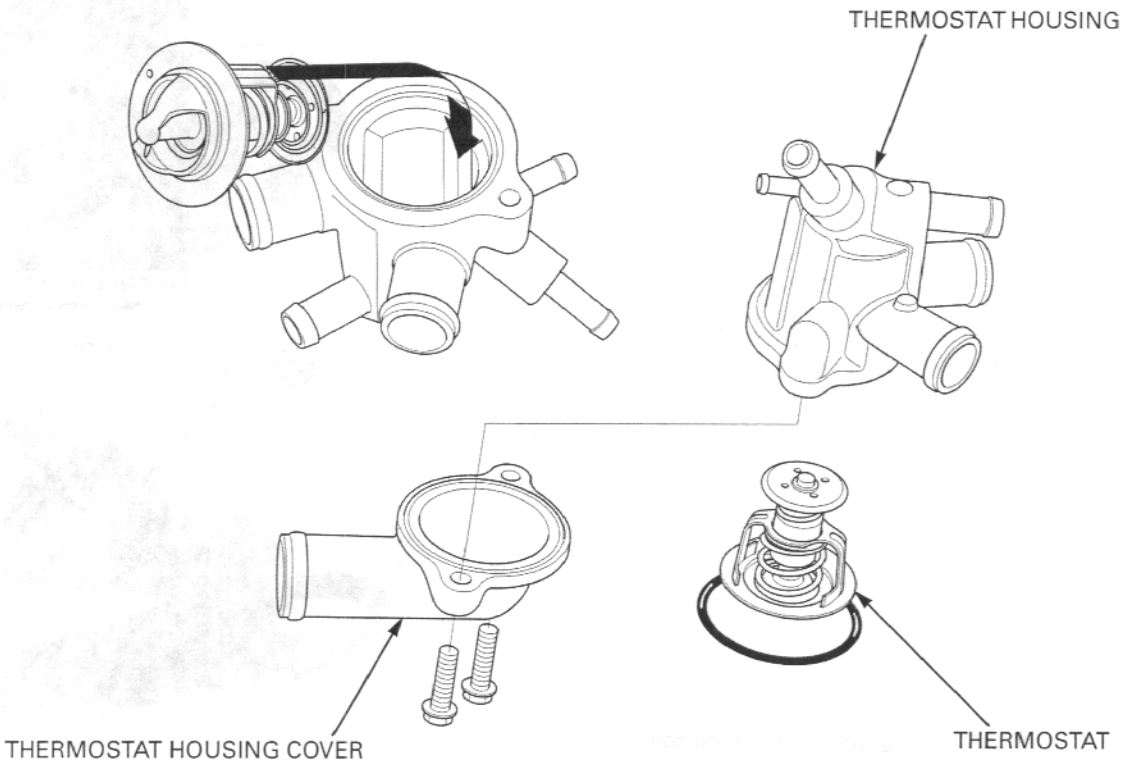

Install new O-ring into the each groove of the water joint groove.

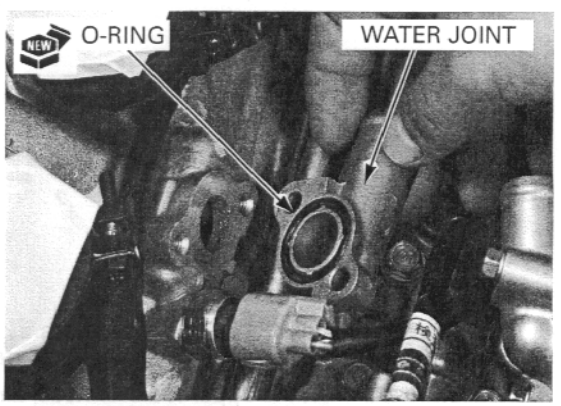

Install the water joints and tighten the bolts.

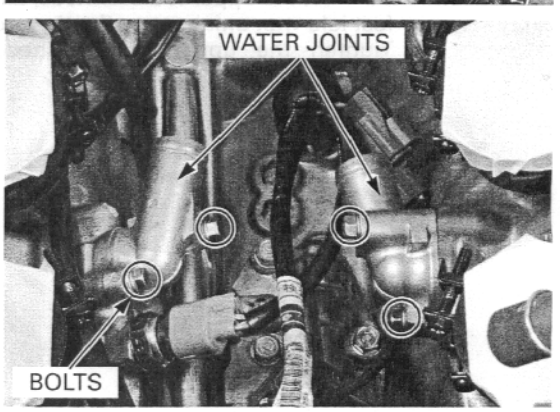

Install the thermostat into the housing into the housing by aligning the body with the groove in the housing.

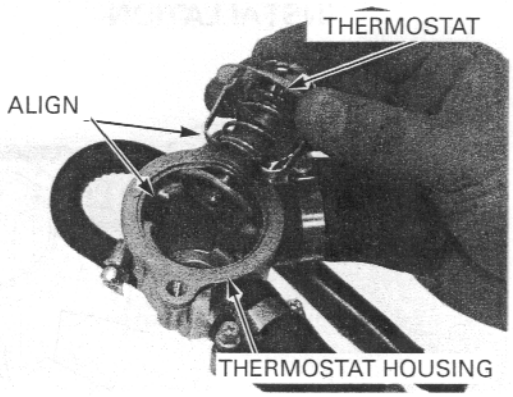

Install a new O-ring into the thermostat housing cover groove.
Install the thermostat housing cover onto the housing.

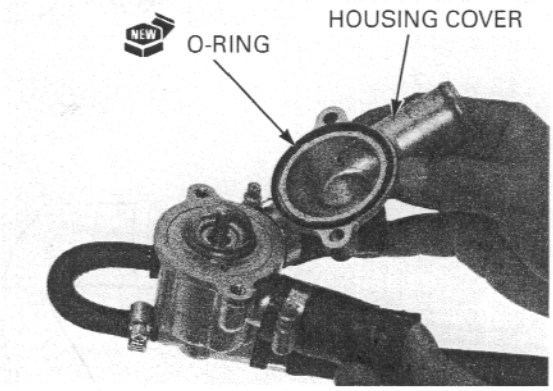

Install and tighten the housing cover bolts.

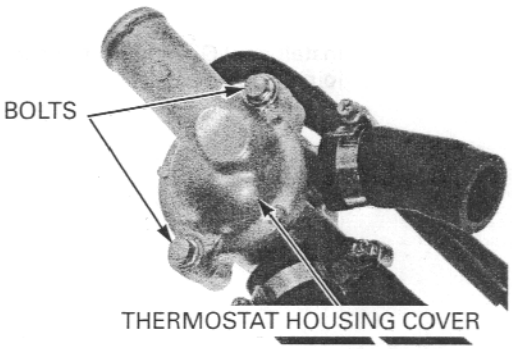

Install all clamps onto the hoses.
Connect the water hoses to the water joints.

Connect the upper radiator hose, air bleed hose and fast idle wax unit hose to the thermostat housing.
Tighten the upper radiator hose clamp screw securely.

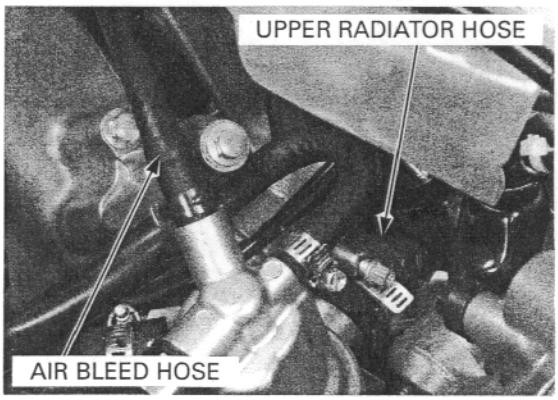

Tighten the water hose clamp screws securely.

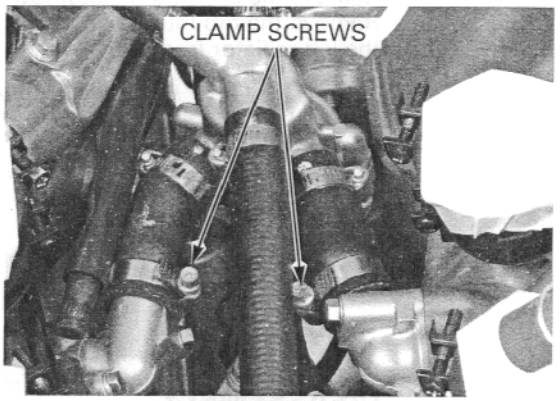

Connect the bypass hose to the water pump cover, then tighten the clamp screw.

Fill the system with the recommended coolant and bleed the air (page 6-6).

Install the throttle body (page 5-67).

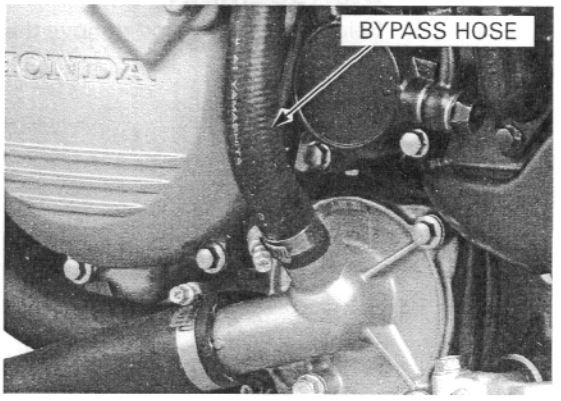

RADIATOR

REMOVAL

Remove the side cowl and inner half cowl (page 2-8).
Drain the coolant (page 6-6).

Loosen the filler neck joint hose and radiator joint hose clamps. Disconnect the filler neck joint hose, upper and lower radiator joint hoses.
Disconnect the air bleed hose.

Remove the bolt and radiator lower bracket.
Remove the mounting bolt and collar, then remove the right radiator from the frame.

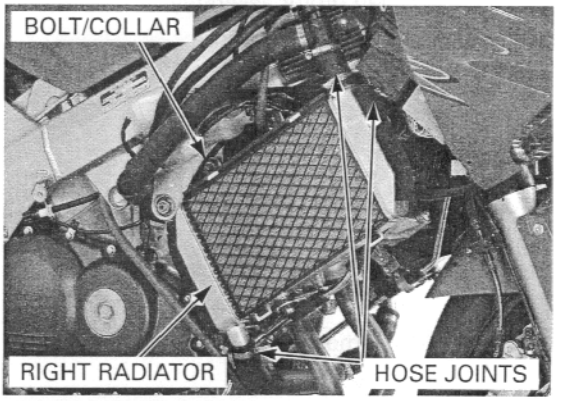

Disconnect the radiator sub-harness 2P (Black) connector.

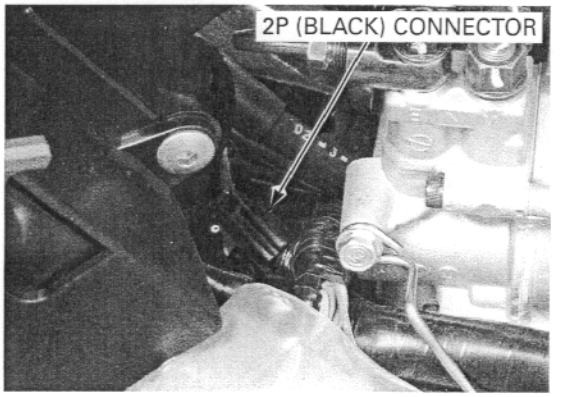

Remove the bolt and radiator lower bracket.
Remove the mounting bolt and collar, then remove the left radiator from the frame.

Loosen the upper joint hose clamp and lower radiator hose clamp, then disconnect the hoses.
Remove the left radiator.

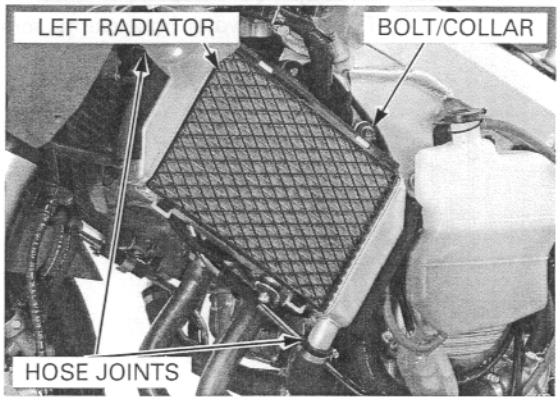

DISASSEMBLY

Release the hooks and remove the radiator grill.

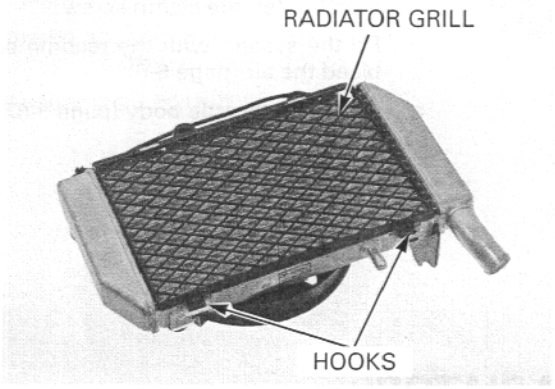

Disconnect the fan motor switch connector.

Remove the three bolts, ground eyelet and cooling fan motor assembly.

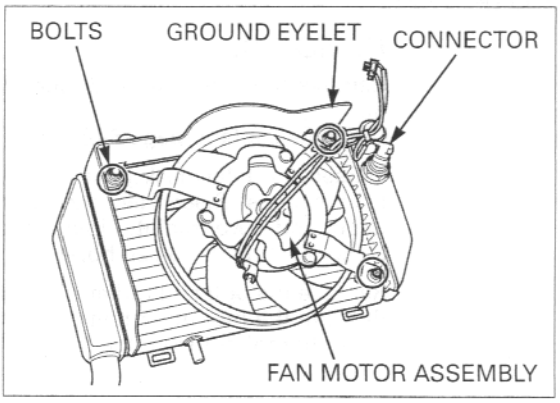

Remove the nut and cooling fan.

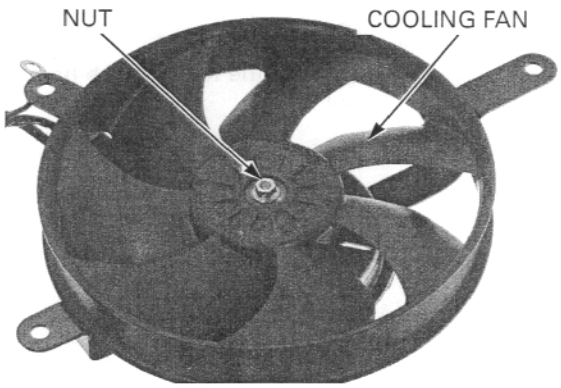

Remove the flange nuts and fan motor from the fan motor bracket.

Refer to the fan motor switch information (page 20-17).

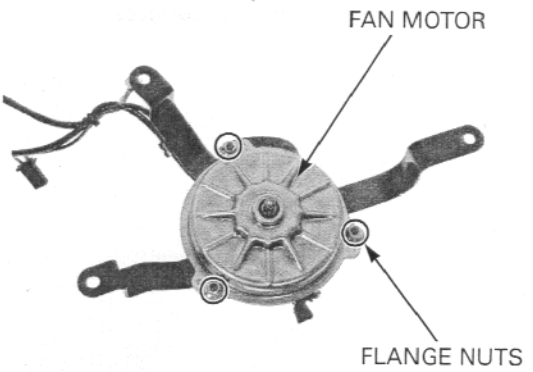

ASSEMBLY

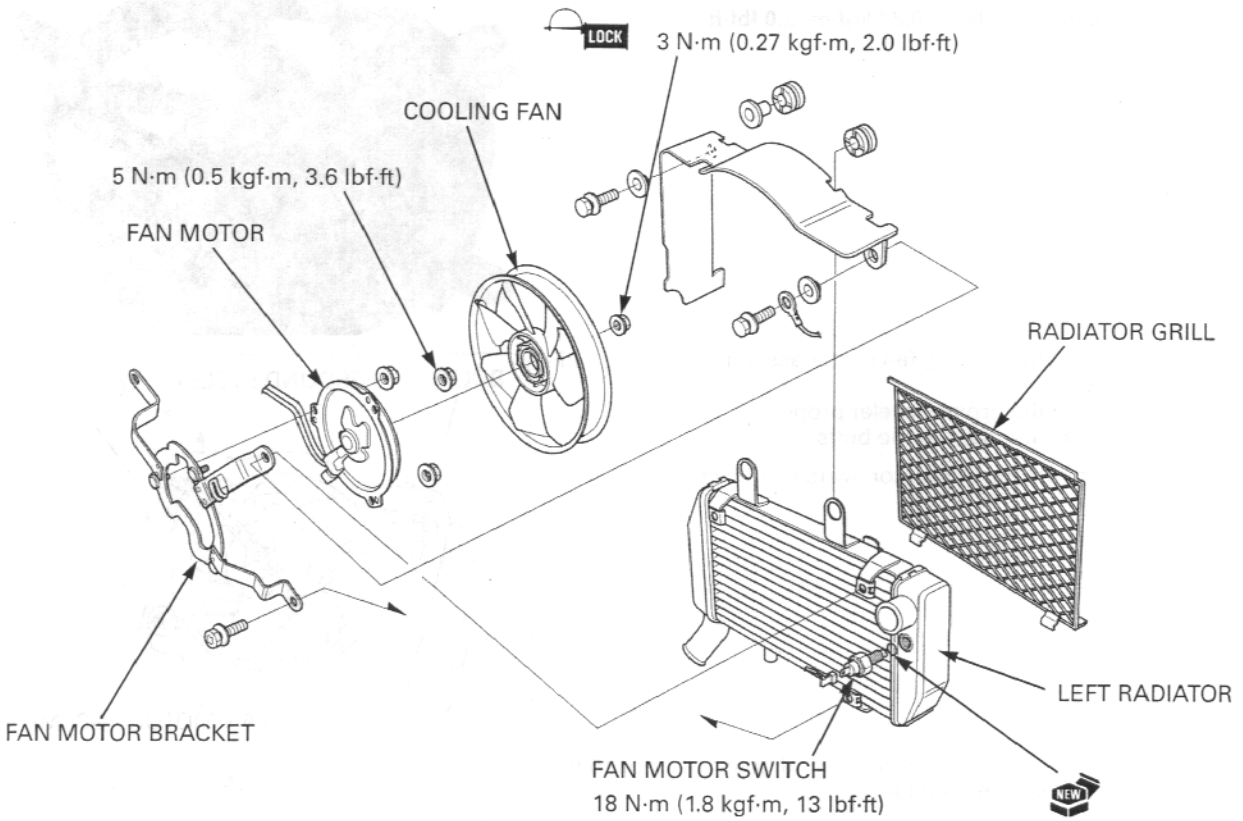

Install the fan motor onto the fan motor bracket and tighten the flange nuts to the specified torque.

TORQUE: 5 N·m (0.5 kgf·m, 3.6 lbf·ft)

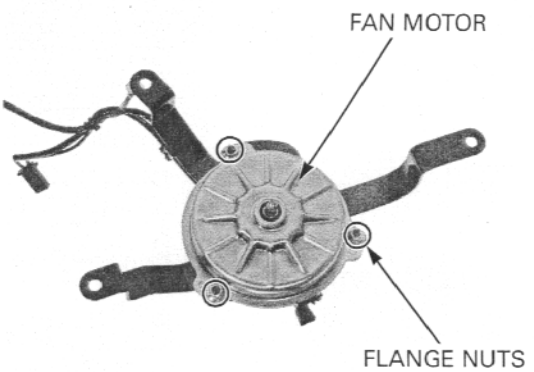

Install the cooling fan onto the fan motor shaft by aligning the flat surfaces.

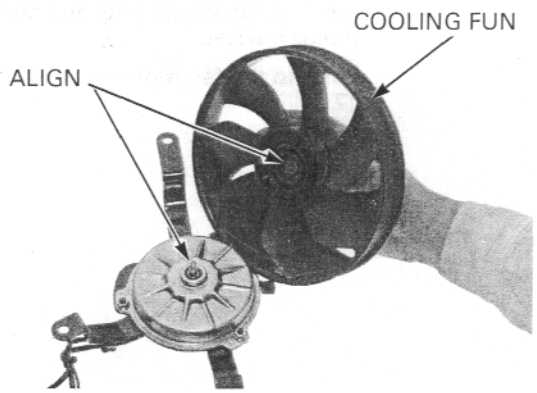

Apply a locking agent to the cooling fan nut threads.
Install and tighten the nut to the specified torque.

TORQUE: 3 N·m (0.27 kgf·m, 2.0 lbf·ft)

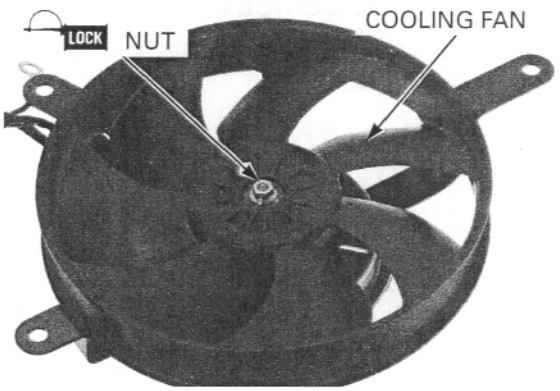

Install the cooling fan motor assembly onto the radiator.
Route the ground eyelet properly.
Install and tighten the bolts.

Connect the fan motor switch connector.

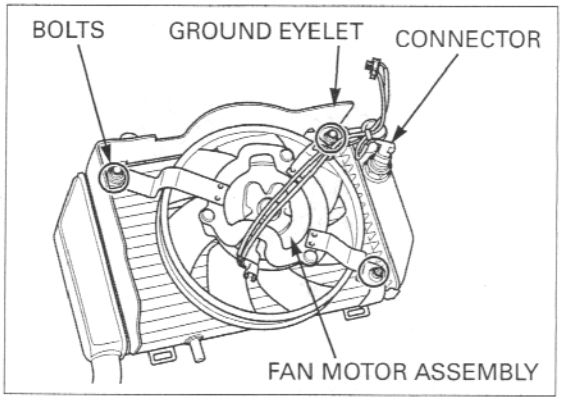

Install the radiator grill while aligning the tabs to the hooks on the radiator.

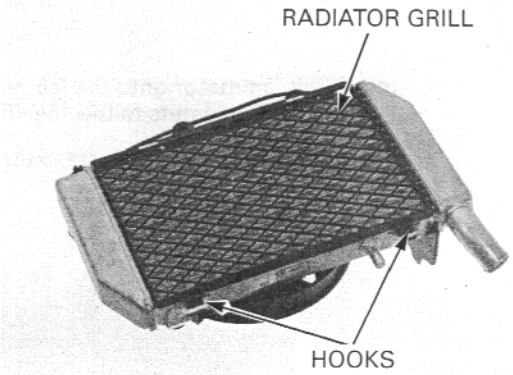

INSTALLATION

Be careful not to damage the radiator core.

Place the radiator onto the frame and connect the upper and lower radiator hoses.
Tighten the clamp screws securely.

Install the left radiator onto the frame boss, then install the collar and mounting bolt.
Tighten the mounting bolt securely.

Install the radiator lower bracket and tighten the bolt securely.

Tighten the hose clamp screws securely.

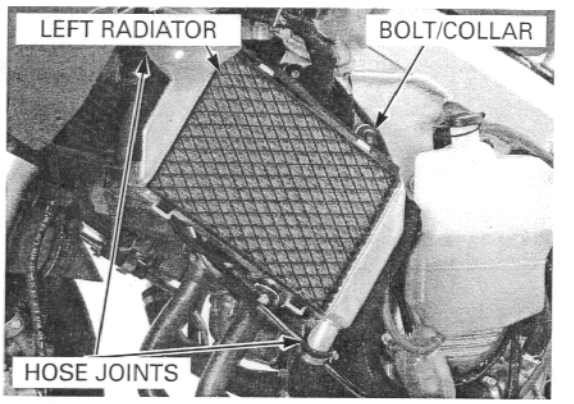

Connect the fan motor sub-harness 2P (Black) connector.

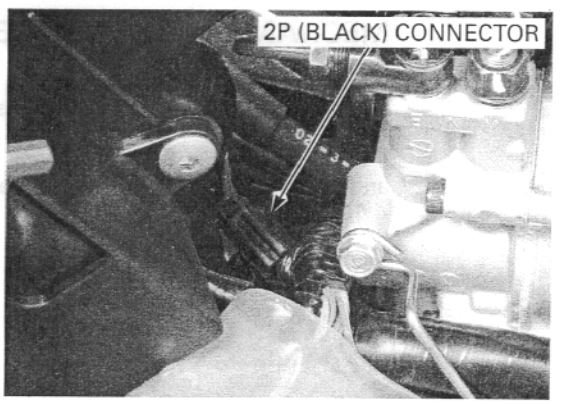

Connect the air bleed hose to the right radiator.
Place the right radiator onto the frame, connect the upper and lower radiator joint hoses and filler neck joint hose.

Install the right radiator onto the frame boss, then install the collar and mounting bolt.
Tighten the mounting bolt securely.

Install the radiator lower bracket and tighten the bolt securely.

Tighten the hose clamp screws securely.

Fill the system with recommended coolant (page 6-6).

Install the inner half cowl and side cowl (page 2-10).

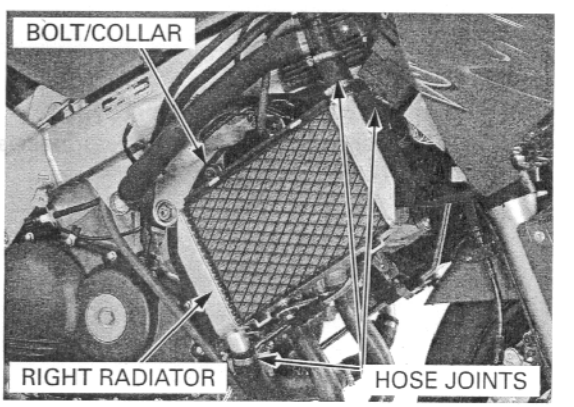

RADIATOR RESERVE TANK

REMOVAL/INSTALLATION

Remove the side cowl (page 2-8).

Remove the radiator reserve tank mounting bolts.
Remove the reserve tank from the frame, drain the coolant from the filler neck.

Disconnect the overflow and siphon hose from the reserve tank.

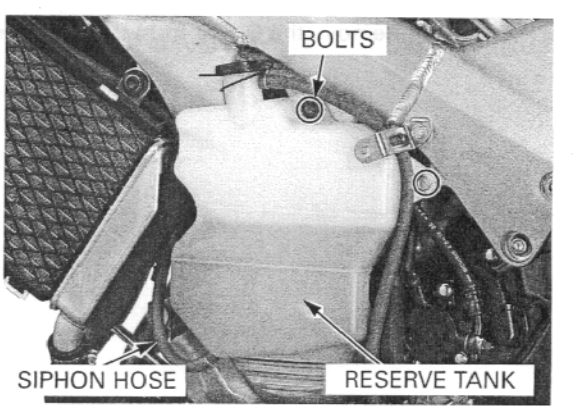

Installation is in the reverse order of removal.

Fill the system with the recommended coolant (page 6-6).
Install the inner half cowl and side cowl (page 2-10).

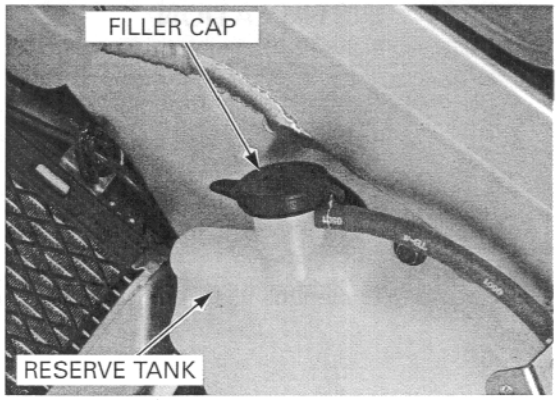

WATER PUMP

MECHANICAL SEAL INSPECTION

Remove the side cowl (page 2-8).

Inspect the inspection hole for signs of coolant leakage.
If there is leakage, the mechanical seal is defective and replace the water pump as an assembly.

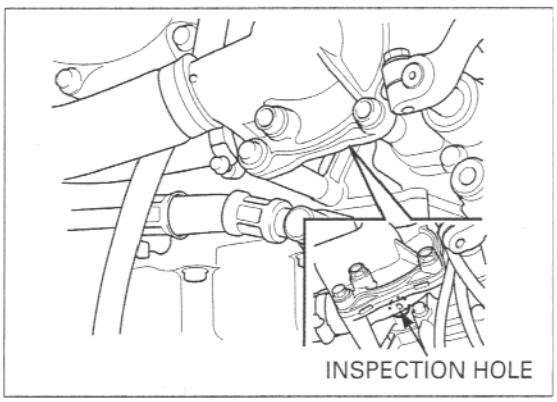

REMOVAL

Drain the coolant (page 6-6).

Disconnect the lower radiator hose and bypass hose from the water pump cover.

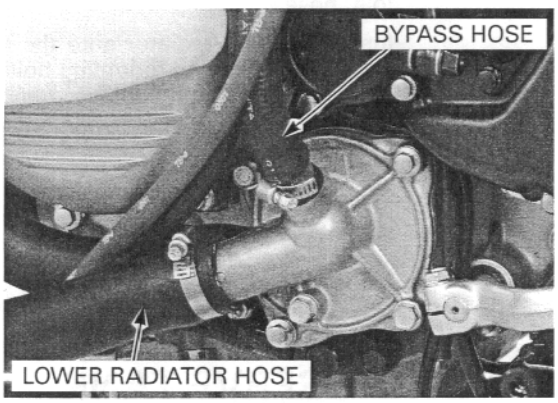

Remove the two flange bolts, two SH bolts and water pump cover.

Remove the O-ring from the water pump body.

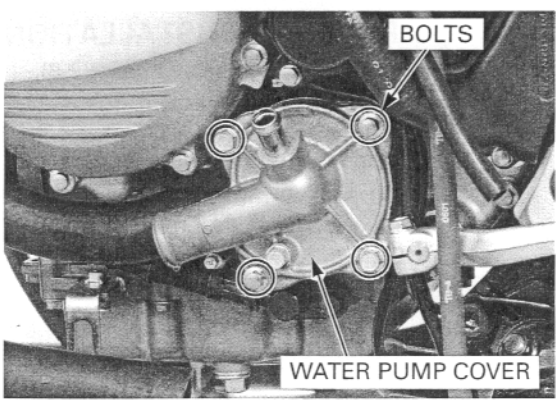

Remove the water hose from the water pump body.

Remove the water pump body from the crankcase.

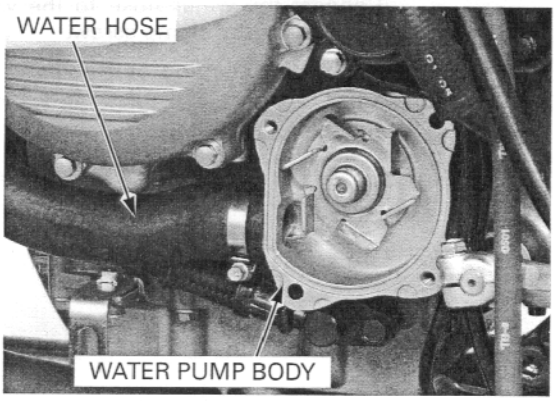

INSTALLATION

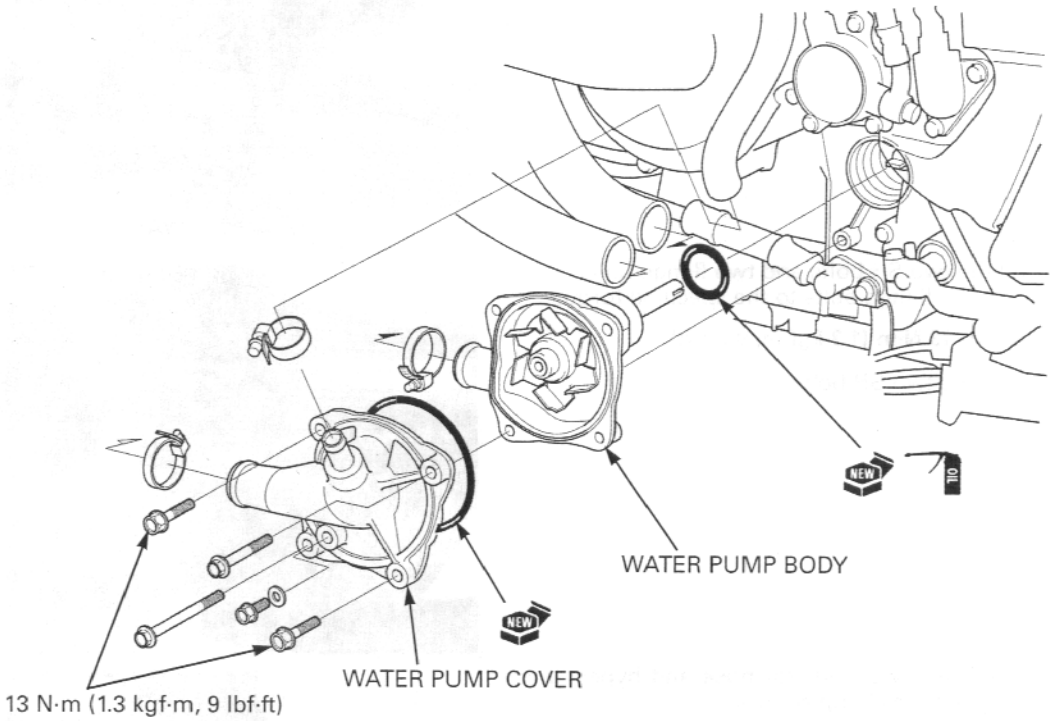

Apply engine oil to a new O-ring and install it onto the stepped portion of the water pump.

Install the water pump into the crankcase while aligning the water pump shaft groove with the oil pump shaft end by turning the water pump impeller.

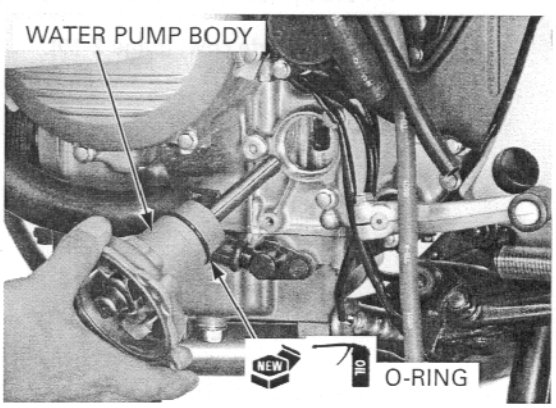

Connect the water hose to the water pump body and tighten the clamp screw.

Align the mounting bolt holes in the water pump and crankcase and make sure the water pump is securely installed.

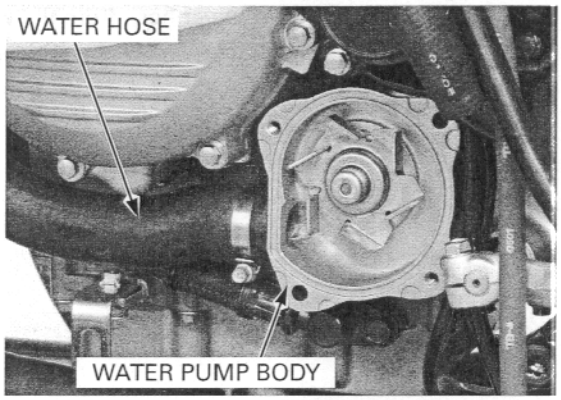

Install a new O-ring into the groove in the water pump body.

Install the water pump cover.

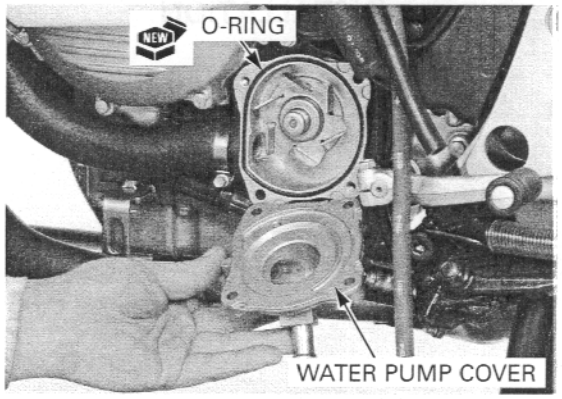

Install the two SH bolts and two flange bolts.
Tighten the flange bolts to the specified torque.

TORQUE: 13 N·m (1.3 kgf·m, 9 lbf·ft)

Tighten the two SH bolts.

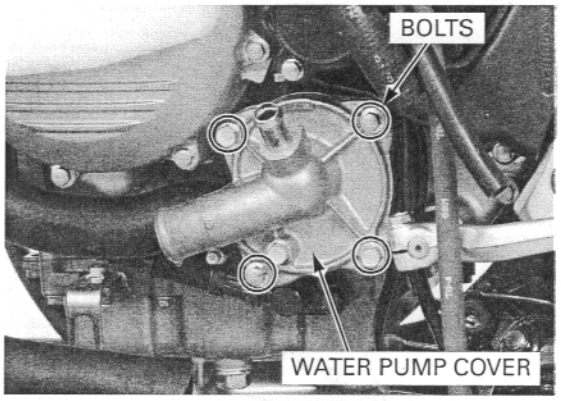

Connect the lower radiator hose and bypass hose, then tighten the clamp screws.

Fill the system with recommended coolant (page 6-6).
Install the side cowl (page 2-10).

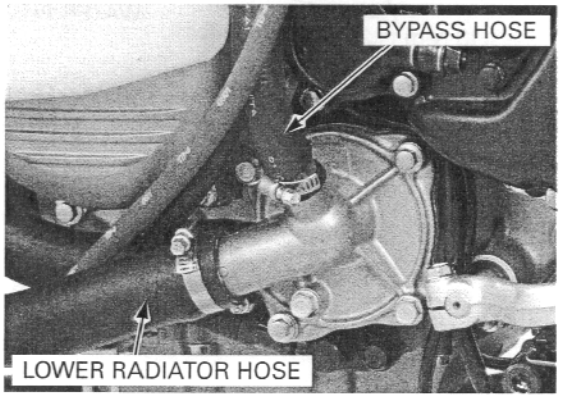

7. ENGINE REMOVAL/INSTALLATION

COMPONENT LOCATION 7-2

SERVICE INFORMATION 7-4

ENGINE REMOVAL 7-5

ENGINE INSTALLATION 7-10

COMPONENT LOCATION

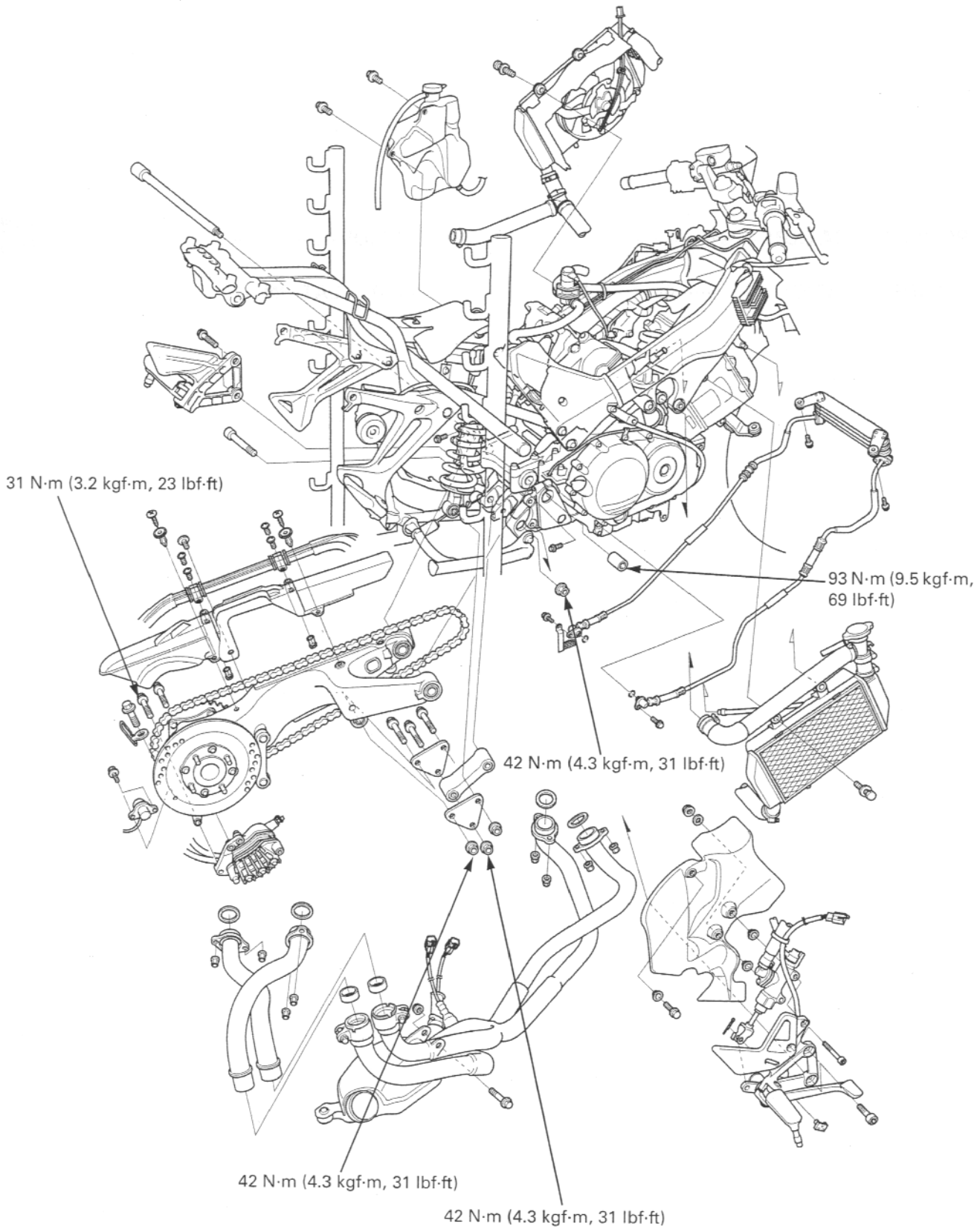

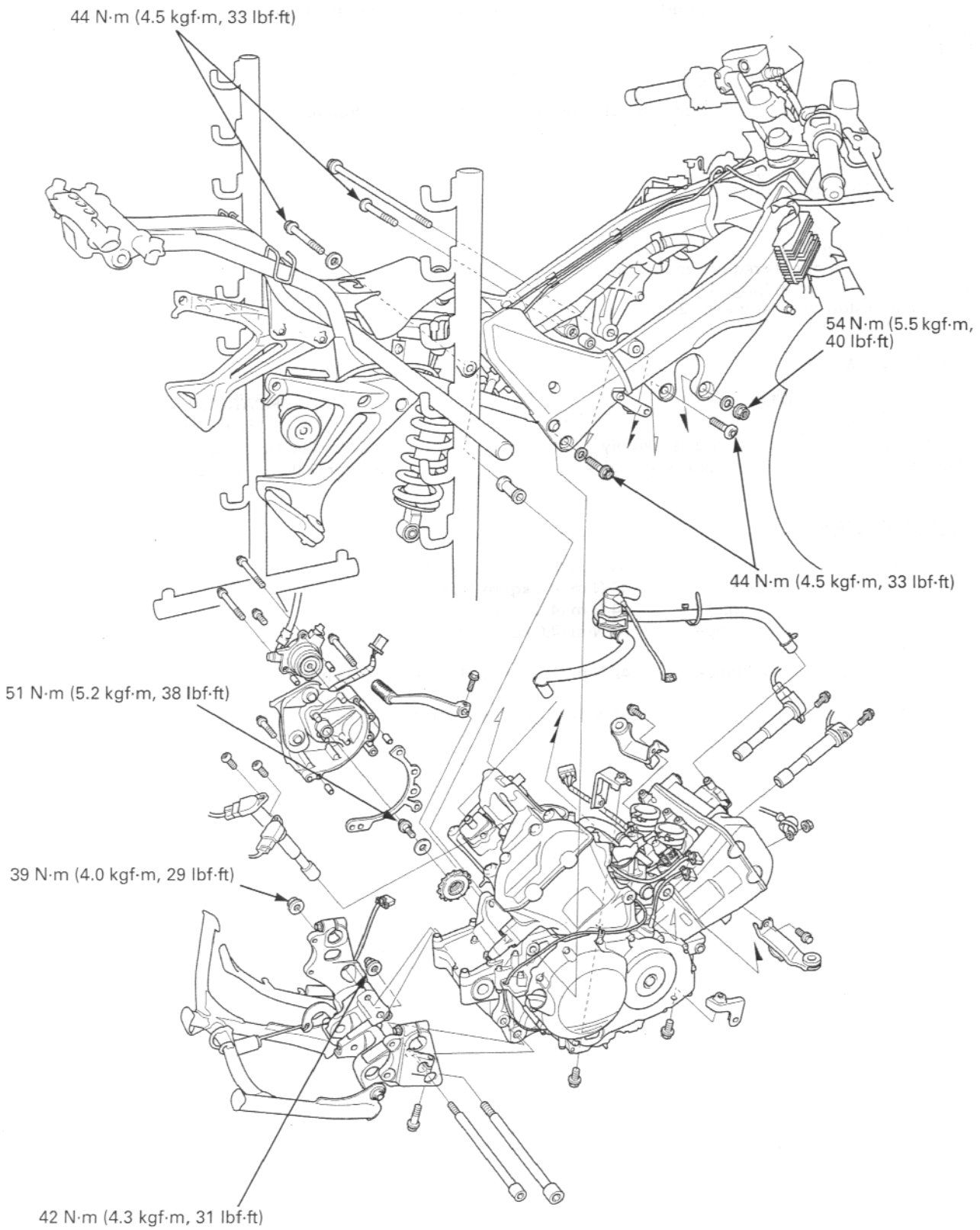
44 N·m (4.5 kgf·m, 33 lbf·ft)
54 N·m (5.5 kgf·m, 40 lbf·ft)
44 N·m (4.5 kgf·m, 33 lbf·ft)
51 N·m (5.2 kgf·m, 38 lbf·ft)
39 N·m (4.0 kgf·m, 29 lbf·ft)
42 N·m (4.3 kgf·m, 31 lbf·ft)

SERVICE INFORMATION

GENERAL

- A hoist or equivalent is required to support the motorcycle when removing and installing the engine.
- A floor jack or other adjustable support is required to support and maneuver the engine.

NOTICE

Do not use the oil filter as a jacking point.

- The following components can be serviced with the engine installed in the frame.
  - Alternator (page 17-10)
  - Clutch (page 9-15)
  - Cylinder head/valves (page 9-11)
  - Gearshift linkage (page 10-5)
  - Oil cooler (page 4-14)
  - Oil pump (page 4-8)
  - Water pump (page 6-18)
- The following components require engine removal for service.
  - Crankcase/transmission (page 11-5)
  - Crankshaft/piston/cylinder (page 12-4)

SERVICE DATA

ITEM		SPECIFICATIONS
Engine dry weight		72.4 kg (159.6 lbs)
Engine oil capacity	After disassembly	3.8 liter (4.0 US qt, 3.3 Imp qt)
Coolant capacity	Radiator and engine	2.92 liter (3.08 US qt, 2.57 Imp qt)

TORQUE VALUES

Engine hanger flange nut (front)	54 N·m (5.5 kgf·m, 40 lbf·ft)	
Engine hanger flange bolt (rear)	44 N·m (4.5 kgf·m, 33 lbf·ft)	
Engine hanger flange bolt (middle)	44 N·m (4.5 kgf·m, 33 lbf·ft)	
Shock absorber lower bracket flange cap nut (lower)	39 N·m (4.0 kgf·m, 29 lbf·ft)	
Shock absorber lower bracket flange nut (upper)	42 N·m (4.3 kgf·m,31 lbf·ft)	U-nut
Drive sprocket special bolt	51 N·m (5.2 kgf·m, 38 lbf·ft)	

ENGINE REMOVAL

Remove the following:

- Side cowl (page 2-8)
- Rear cowl (page 2-5)
- Rear fender B (page 2-17)
- Muffler and exhaust pipe (page 2-28)
- Fuel tank (page 5-56)
- Throttle body (page 5-63)

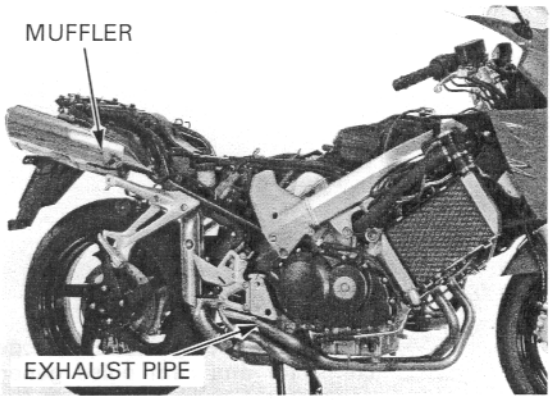

California type only: Remove the bolts and EVAP canister.
Remove the EVAP purge control valve (page 5-88).

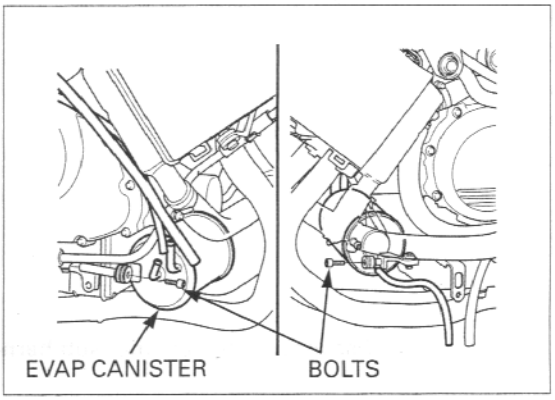

Remove the following:

- Radiator reserve tank (page 6-17)
- Vehicle speed sensor (page 20-4)
- Clutch slave cylinder (page 9-11)
- Drive sprocket cover (page 10-4)

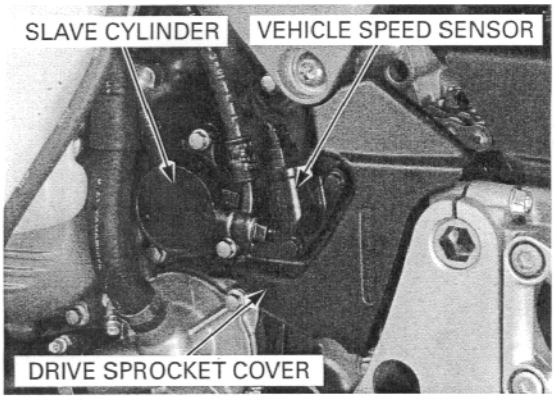

Remove the drive sprocket bolt, washer and drive sprocket (page 10-4).
Remove the swingarm assembly from the shock absorber lower bracket (page 14-31).
Remove the shock link socket bolt/nut (page 14-24).

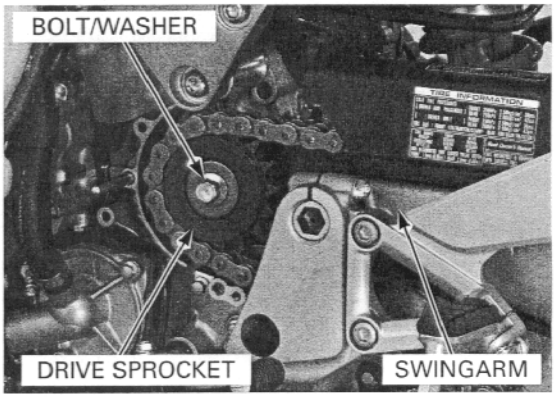

Support the motorcycle securely at the seat rail as shown.

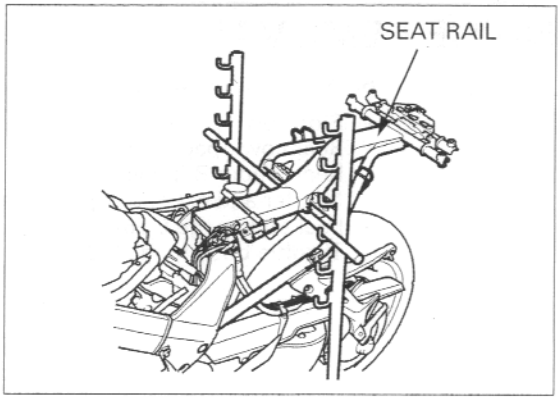

Disconnect the ignition pulse generator 2P (Red) connector and cam pulse generator 2P (Natural) connector.

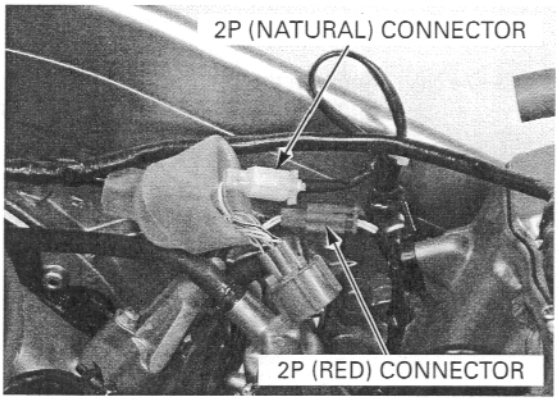

Disconnect the engine sub-harness 6P (Natural) connector.

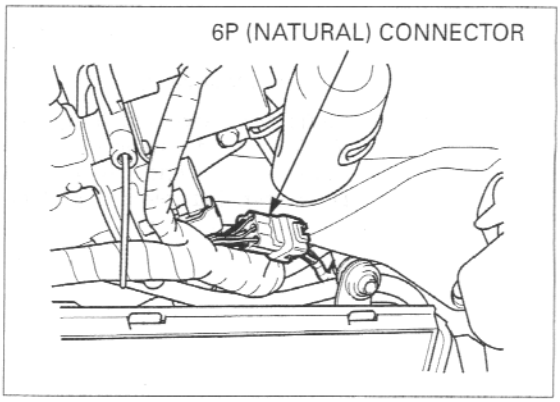

Unfasten the PAIR air hose clamp.

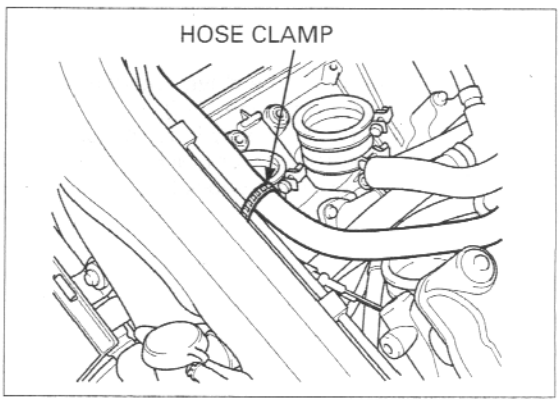

Disconnect the side stand switch 2P (Green) connector.

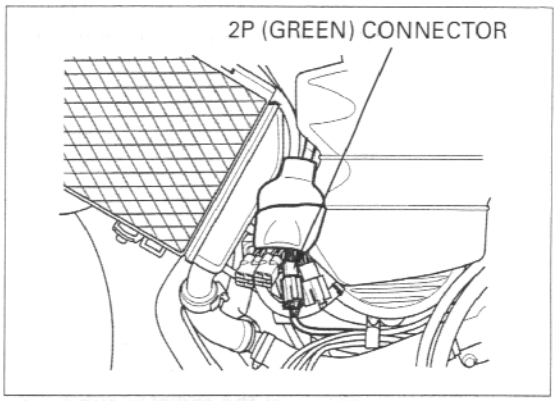

Disconnect the alternator 3P (White) connector.

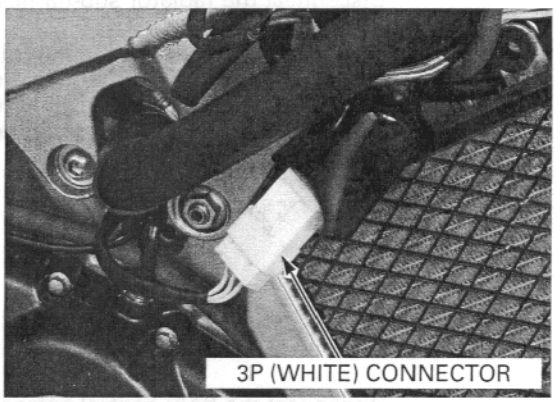

Loosen the clamp screw and disconnect the upper radiator hose and air bleed hose from the thermostat housing.

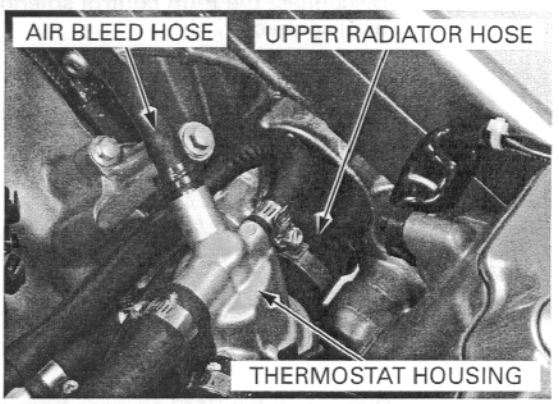

Loosen the clamp screw and disconnect the lower radiator hose from the water pump.

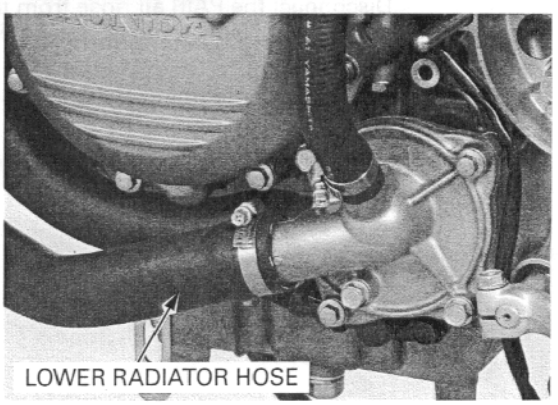

Remove the oil cooler hose joint mounting bolts.

Remove the mounting bolts and oil cooler assembly.

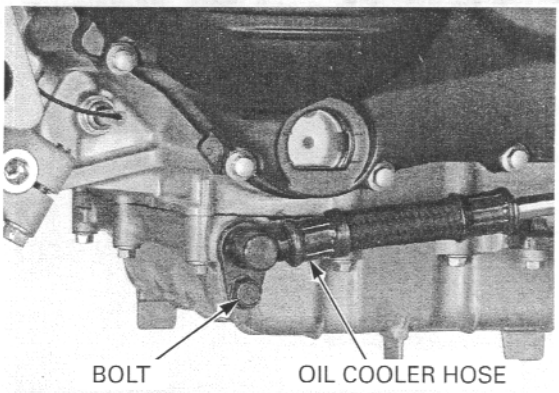

Disconnect the radiator sub-harness 2P (Black) connector.
Remove the SH bolts and radiator lower stays.
Remove the radiator mounting bolts and remove the right and left radiator as an assembly.
Remove the starter motor mounting bolt and starter motor ground cable.

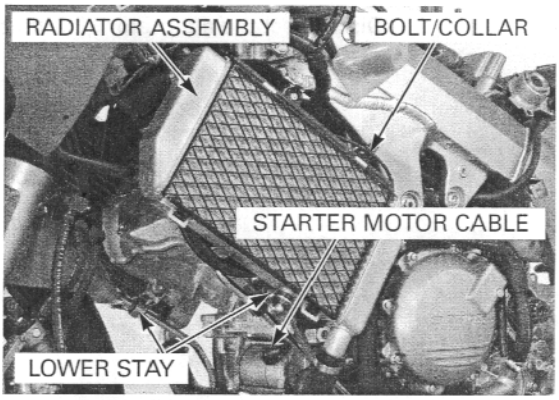

Disconnect the PAIR control solenoid valve 2P (Natural) connector.

Disconnect the PAIR air hose from the rear cylinder head cover.
Remove the bolts and ignition coils from the rear cylinder head cover.

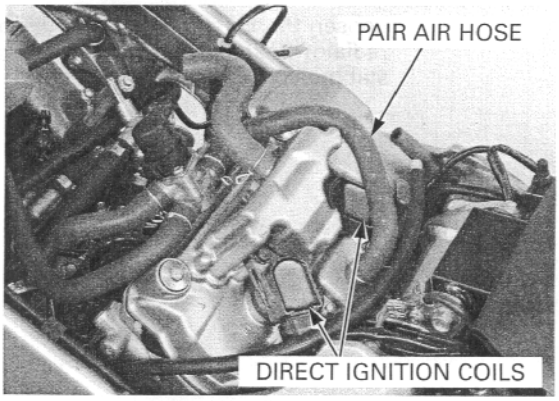

Disconnect the PAIR air hose from the front cylinder head cover, then remove the PAIR solenoid valve assembly.

Remove the mounting bolts and oil cooler assembly.

Remove the bolts and ignition coils from the front cylinder head cover.

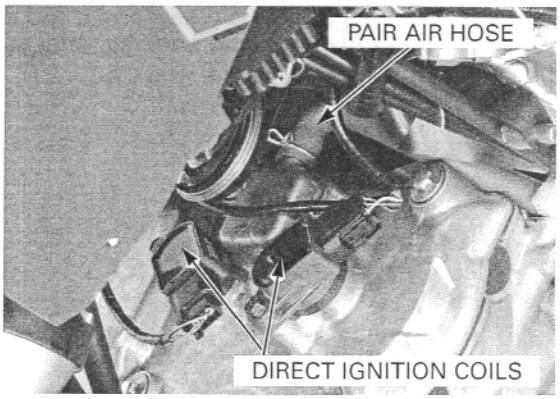

Remove the bolt and gearshift pedal.

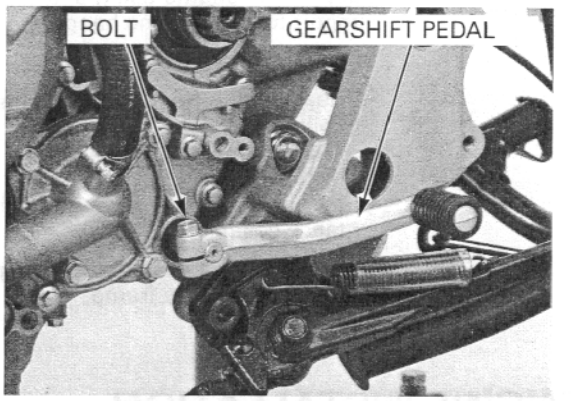

Loosen the shock absorber lower bracket mounting bolt pinch bolts.

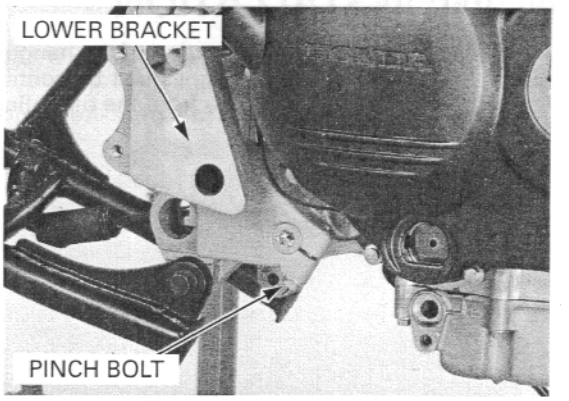

Remove the shock absorber lower bracket mounting cap nut and U-nut.
Remove the socket bolts and shock absorber lower bracket/side stand bracket as an assembly.

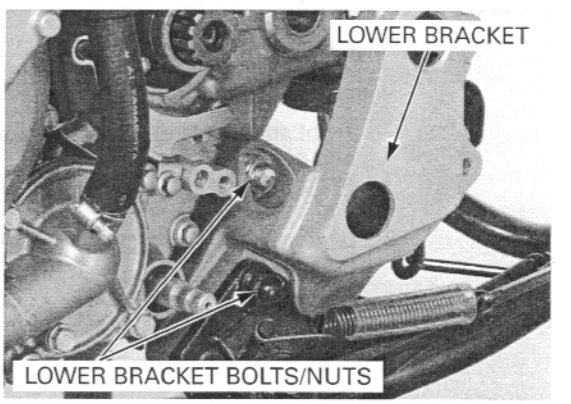

To prevent damaging the oil pan bosses, remove the bolts and side cowl brackets.

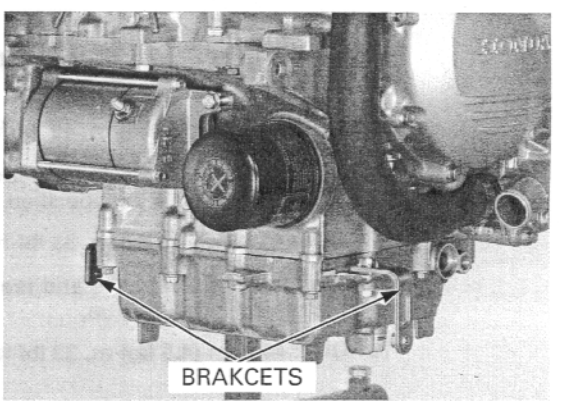

Support the engine using a jack or other adjustable support to ease engine hanger bolt removal.

Remove the following:

- Rear engine hanger bolts, washer and distance collar
- Middle engine hanger socket bolt, washer and distance collar
- Front engine hanger nut, washer, bolt and distance collar

Carefully lower the adjustable support, then remove the engine from the frame.

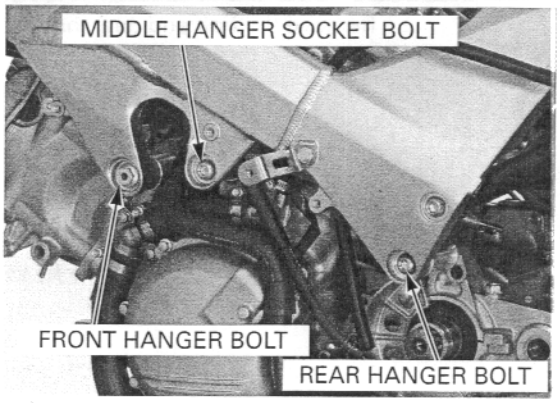

ENGINE INSTALLATION

- Note the direction of the hanger bolts.
- The jack height must be continually adjusted to relieve stress from the mounting fasteners.

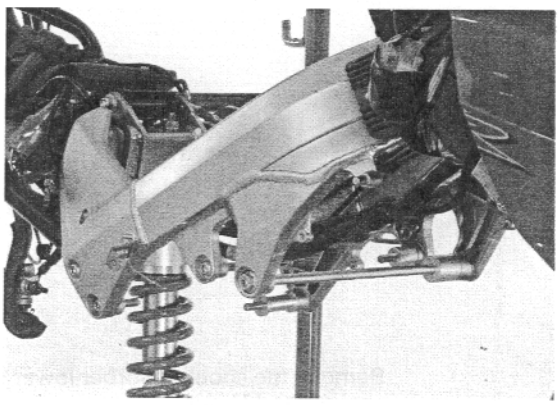

Install the engine into the frame.

Install the following:

- Front engine hanger bolt, distance collar, washer and nut
- Middle engine hanger distance collar, washer and bolts
- Rear engine hanger distance collar, washer and bolt

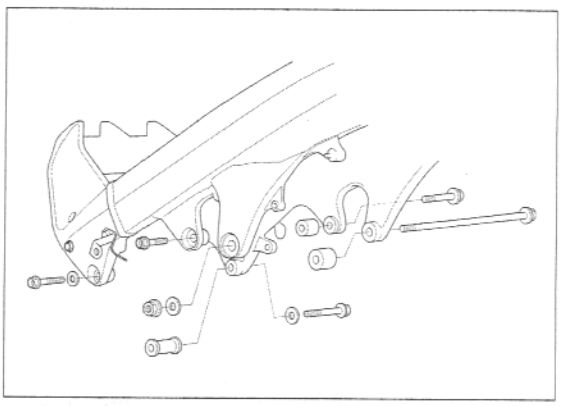

Tighten the front engine hanger nut to the specified torque.

TORQUE: 54 N·m (5.5 kgf·m, 40 lbf·ft)

Tighten the right side middle and rear engine hanger flange bolts to the specified torque.

TORQUE: 44 N·m (4.5 kgf·m, 33 lbf·ft)

Tighten the left side middle and rear engine hanger bolts to the specified torque.

TORQUE: 44 N·m (4.5 kgf·m, 33 lbf·ft)

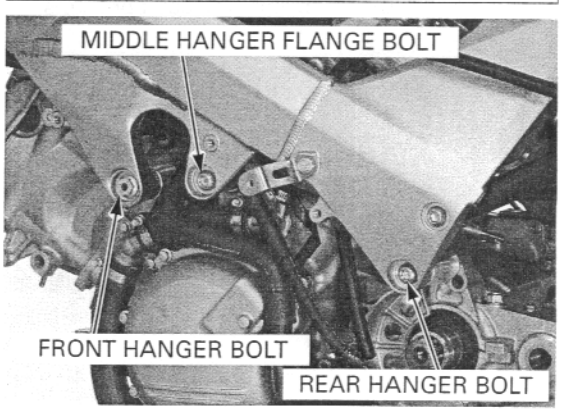

Install the side cowl bracket and tighten the bolts.

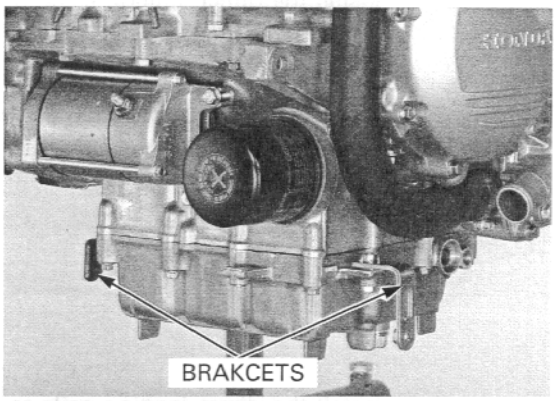

Install the shock absorber lower bracket onto the engine.
Install the socket bolts.

Tighten the U-nut to the specified torque.

TORQUE: 42 N·m (4.3 kgf·m, 31 lbf·ft)

Tighten the cap nut to the specified torque.

TORQUE: 39 N·m (4.0 kgf·m, 29 lbf·ft)

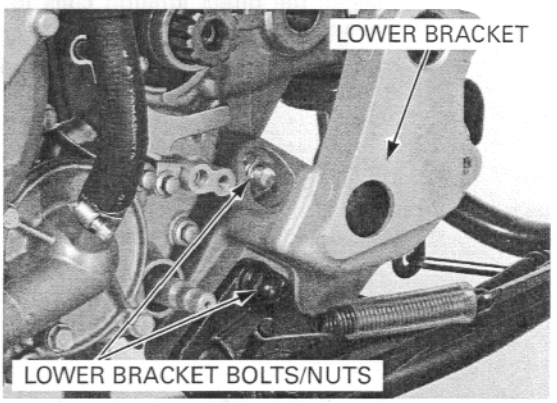

Tighten the shock absorber lower bracket mounting bolt pinch bolt securely.

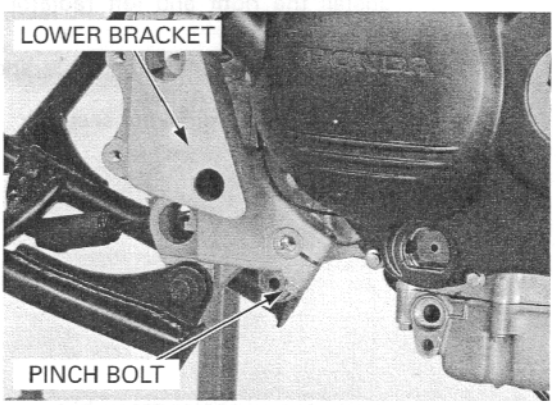

Install the gearshift pedal aligning its split with the punch mark on the gearshift spindle.
Install and tighten the pinch bolt.

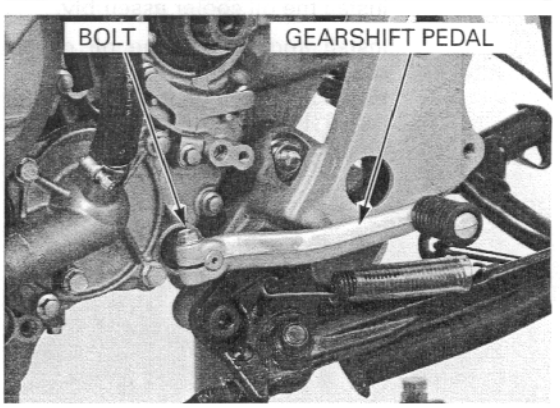

Install the direct ignition coils to the front cylinder head, tighten the bolts securely.

Install the PAIR air hose and PAIR solenoid valve assembly.
Connect the PAIR air hose to the front cylinder head cover.

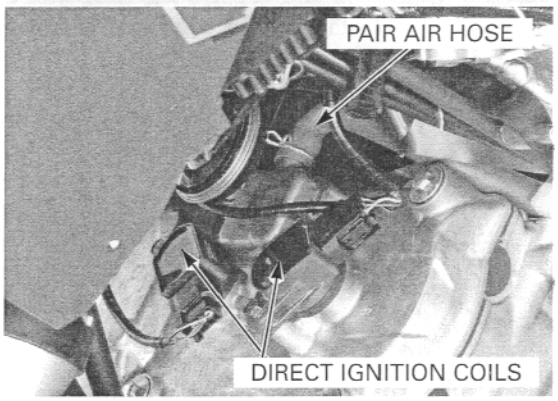

Install the direct ignition coils to the rear cylinder head, tighten the bolts securely.

Connect the PAIR air hose to the rear cylinder head.

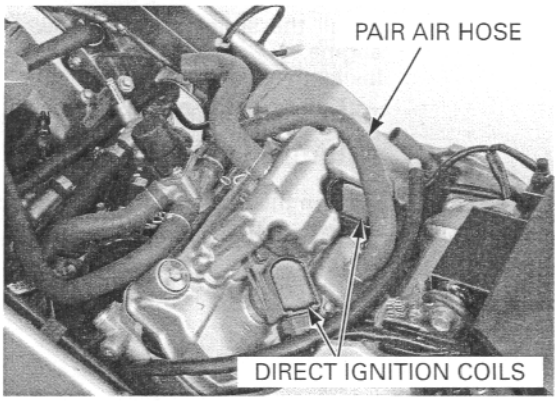

Install the right and left radiator as an assembly (page 6-13).

Route the starter motor cable and connect to the starter motor terminal.
Tighten the terminal nut securely.

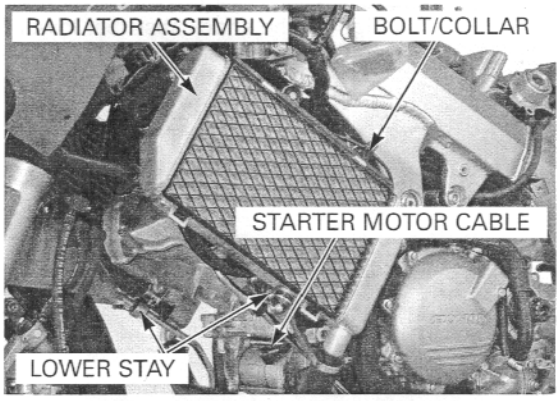

Install the oil cooler assembly.

Install and tighten the oil cooler mounting bolts securely.
Install new O-rings to the oil cooler hose joints.
Install the oil cooler hose joints to the oil pan, tighten the bolt securely.

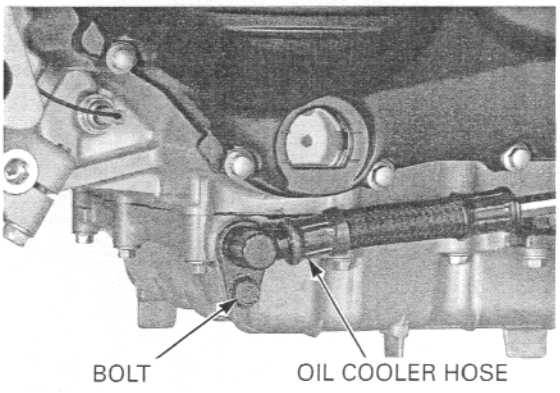

Connect the lower radiator hose to the water pump cover, tighten the clamp screw securely.

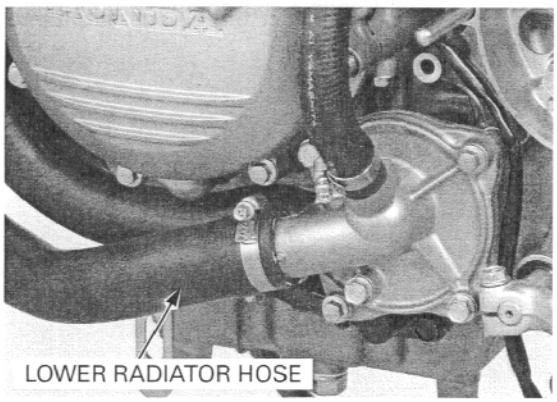

Connect the air bleed hose to the thermostat housing.

Connect the upper radiator hose to the thermostat housing cover, tighten the clamp screw securely.

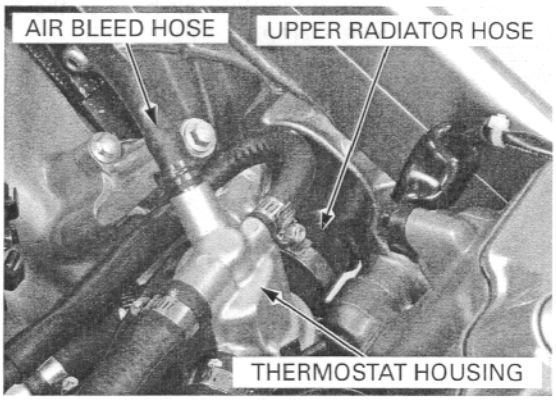

Connect the alternator 3P (White) connector.

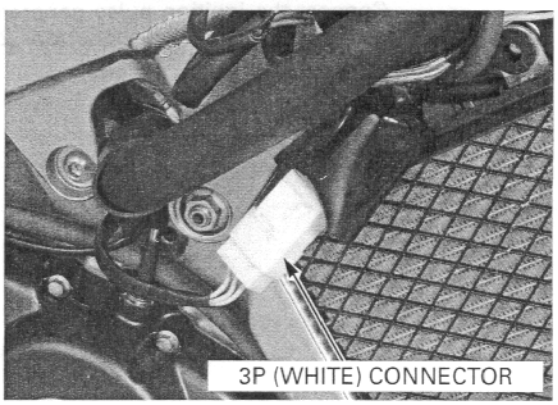

Connect the side stand switch 2P (Green) connector.

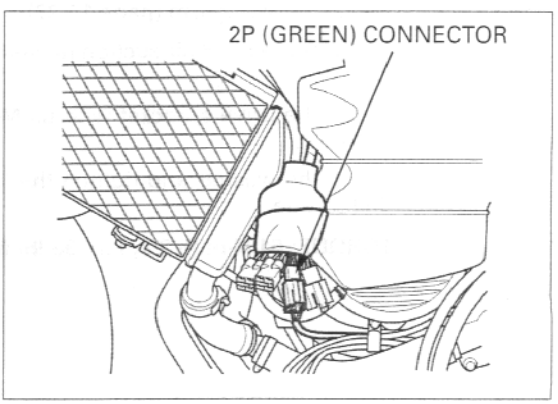

Connect the engine sub-harness 6P (Natural) connector.

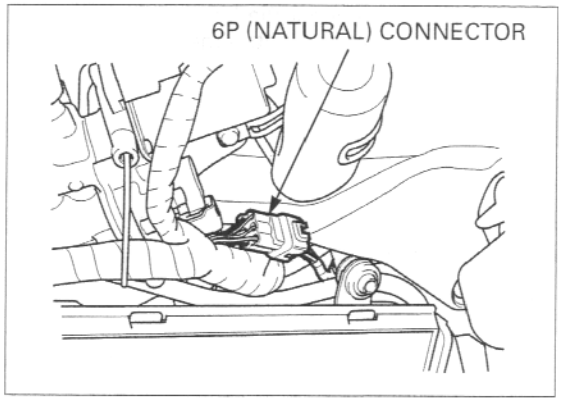

Clamp the PAIR air hose to the brake pipe using a wire clamp.

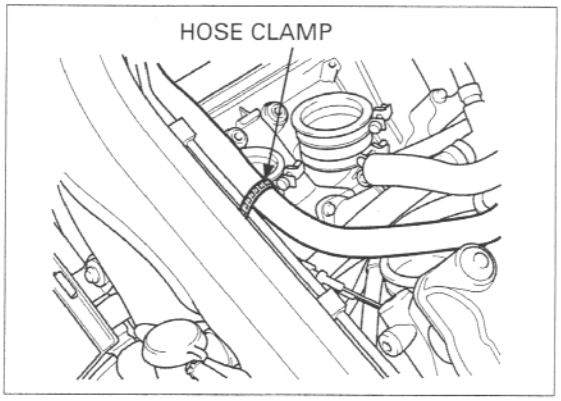

Connect the ignition pulse generator 2P (Red) connector and cam pulse generator 2P (Natural) connector.

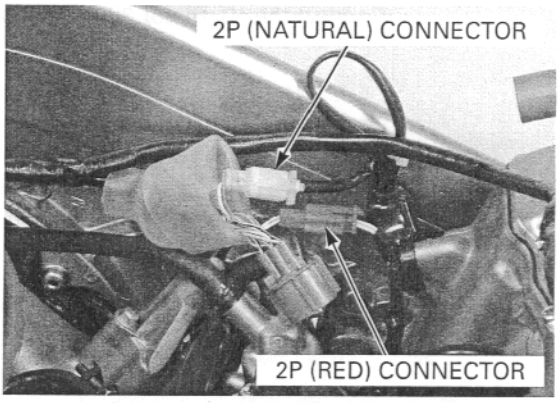

Install the swingarm (page 14-37)

Connect the PAIR air suction hoses to the reed valve covers.

Install the drive sprocket with tis MCW mark facing outward.

Install the washer and tighten the bolt to the specified torque.

TORQUE: 51 N·m (5.2 kgf·m, 38 lbf·ft)

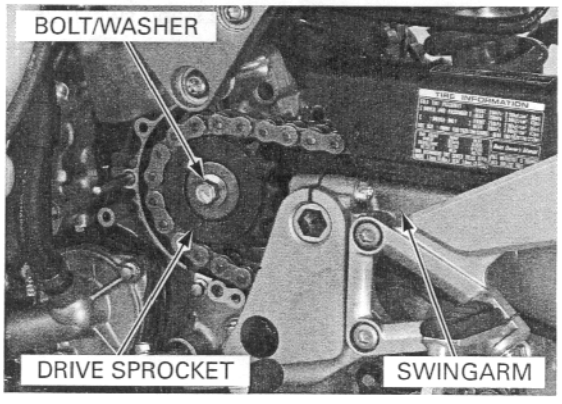

Install the following:

- Drive sprocket cover (page 10-10)
- Clutch slave cylinder (page 9-13)
- Vehicle speed sensor (page 20-4)
- Radiator reserve tank (page 6-17)

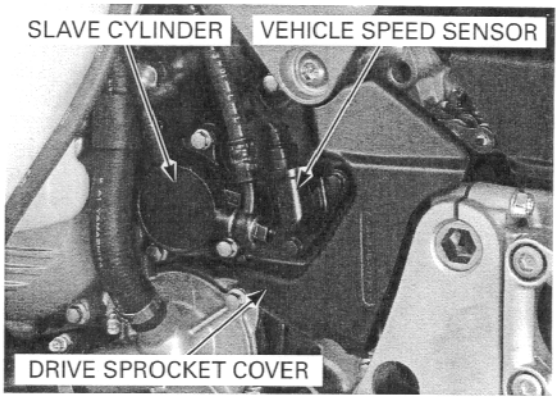

California type only: Install the EVAP canister onto the bracket, then install and tighten the socket bolts securely.
Install the EVAP purge control valve (page 5-88).

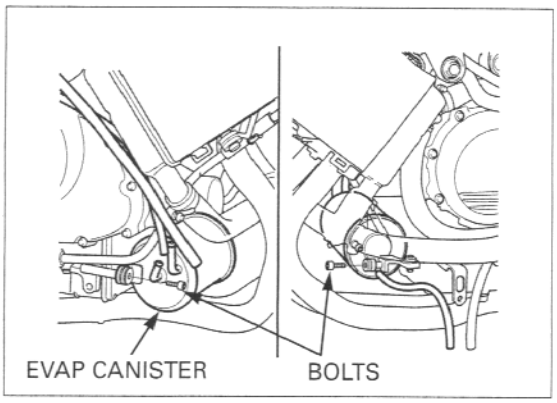

Install the following:

- Rear fender (page 2-20)
- Exhaust pipe/muffler (page 2-30)
- Throttle body (page 5-67)
- Fuel tank(page 5-58)
- Rear cowl (page 2-7)
- Side cowl (page 2-10)

Adjust the drive chain slack (page 3-19).
Pour recommended engine oil up to the proper level (page 3-14)
Fill the cooling system with recommended coolant and bleed the air (page 6-6).

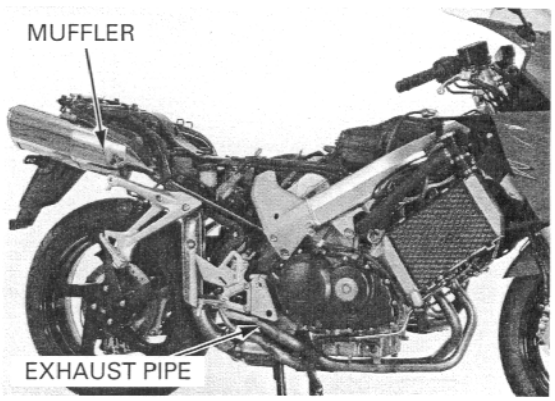

MEMO

8. CYLINDER HEAD/VALVES

COMPONENT LOCATION 8-2

SERVICE INFORMATION 8-3

TROUBLESHOOTING 8-5

CYLINDER COMPRESSION TEST 8-6

CYLINDER HEAD COVER REMOVAL 8-6

CYLINDER HEAD COVER DISASSEMBLY · 8-10

FRONT CAMSHAFT REMOVAL 8-11

REAR CAMSHAFT REMOVAL 8-14

CAMSHAFT INSPECTION 8-17

CYLINDER HEAD REMOVAL 8-19

CYLINDER HEAD DISASSEMBLY 8-21

CYLINDER HEAD INSPECTION 8-23

VALVE GUIDE REPLACEMENT 8-25

VALVE SEAT INSPECTION/REFACING 8-26

CYLINDER HEAD ASSEMBLY 8-29

CYLINDER HEAD INSTALLATION 8-34

FRONT CAMSHAFT INSTALLATION 8-37

REAR CAMSHAFT INSTALLATION 8-42

CYLINDER HEAD COVER ASSEMBLY 8-48

CYLINDER HEAD COVER INSTALLATION · 8-49

CAM CHAIN TENSIONER LIFTER 8-53

COMPONENT LOCATION

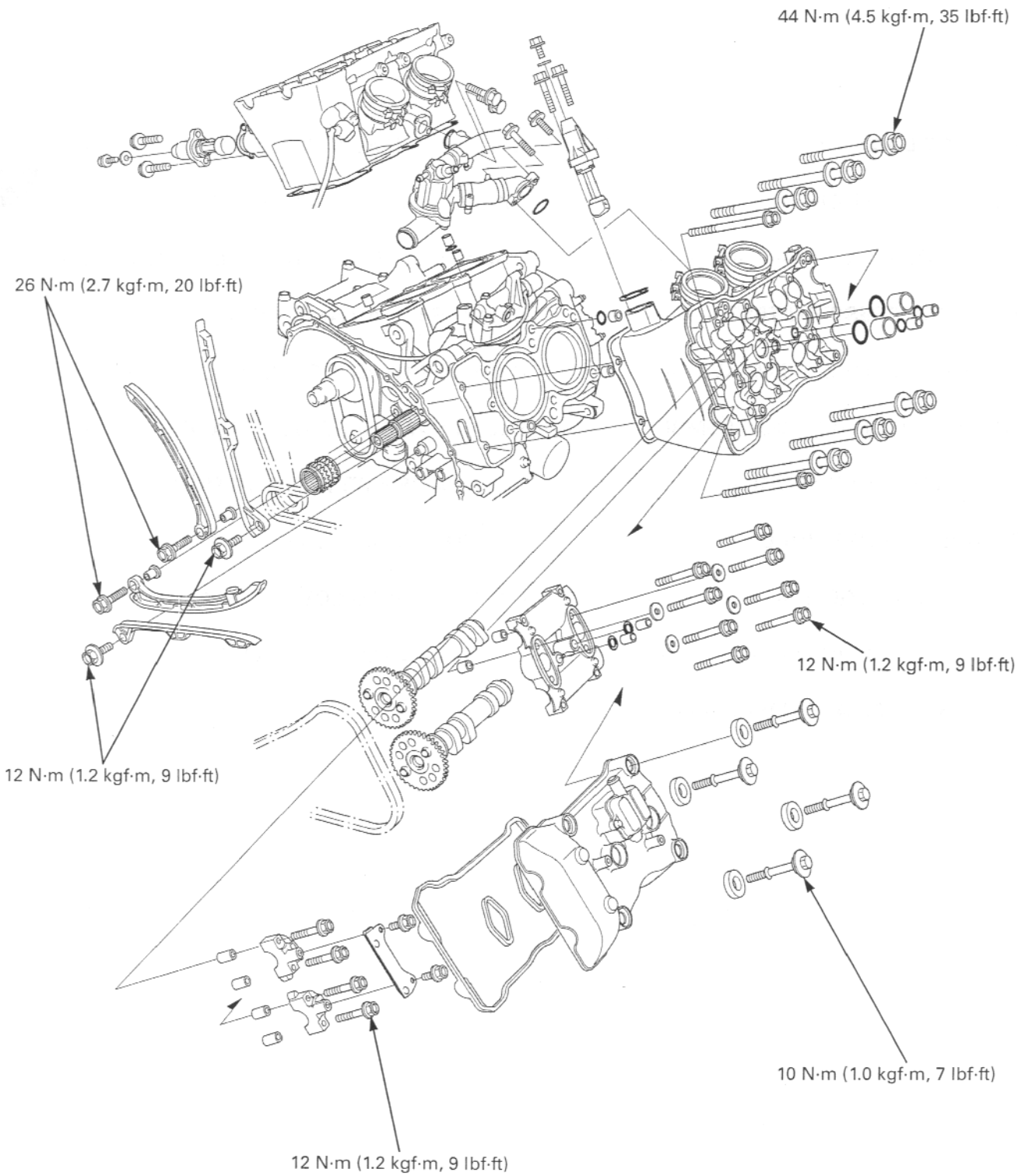

SERVICE INFORMATION

GENERAL

- This section covers service of the cylinder head, valves and camshaft.
- The camshaft services can be done with the engine installed in the frame.
- The rear cylinder head cannot be removed with the engine installed in the frame.
- When disassembling, mark and store the disassembled parts to ensure that they are reinstalled in their original locations.
- Clean all disassembled parts with cleaning solvent and dry them by blowing them off with compressed air before inspection.
- Camshaft lubricating oil is fed through oil passages in the cylinder head. Clean the oil passages before assembling cylinder head.
- Be careful not to damage the mating surfaces when removing the cylinder head cover and cylinder head.

SPECIFICATIONS

Unit: mm (in)

ITEM			STANDARD	SERVICE LIMIT
Cylinder compression			981 – 1,373 kPa (10.0 – 14.0 kgf/cm^2, 142 – 178 psi) at 300 rpm	–
Valve clearance	Normal side	IN	0.20 ± 0.03 (0.008 ± 0.001)	–
		EX	0.35 ± 0.03 (0.013 ± 0.001)	–
	VTEC side	IN	0.20 ± 0.08 (0.008 ± 0.003)	–
		EX	0.35 ± 0.08 (0.013 ± 0.003)	–
Camshaft	Cam lobe height	IN	36.36 – 36.44 (1.431 – 1.435)	36.33 (1.430)
		EX	36.21 – 36.29 (1.426 – 1.429)	36.18 (1.424)
	Runout		–	0.05 (0.002)
	Oil clearance		0.020 – 0.062 (0.0008 – 0.0024)	0.10 (0.004)
Valve lifter	Valve lifter O.D.		25.978 – 25.993 (1.0228 – 1.0233)	25.97 (1.022)
	Valve lifter bore I.D.		26.010 – 26.026 (1.024 – 1.0246)	26.04 (1.025)
Valve, valve guide	Valve stem O.D.	IN	4.475 – 4.490 (0.1762 – 0.1768)	4.465 (0.1758)
		EX	4.465 – 4.480 (0.1758 – 0.1764)	4.455 (0.1754)
	Valve guide I.D.	IN/EX	4.500 – 4.512 (0.1772 – 0.1776)	4.540 (0.1787)
	Stem-to-guide clearance	IN	0.010 – 0.037 (0.0004 – 0.0015)	0.075 (0.0030)
		EX	0.020 – 0.047 (0.0008 – 0.0019)	0.085 (0.0033)
	Valve guide projection above cylinder head	Normal side	12.15 – 12.50 (0.478 – 0.492)	–
		VTEC side	19.65 – 20.00 (0.774 – 0.787)	–
	Valve seat width	IN/EX	0.90 – 1.10 (0.035 – 0.043)	1.5 (0.06)
Valve spring free length	Spring A outer		42.3 (1.67)	41.5 (1.63)
	Spring B outer		54.3 (2.14)	53.2 (2.09)
	Spring A inner		39.8 (1.57)	39.0 (1.54)
	Spring B inner		39.1 (1.54)	38.3 (1.51)
Cylinder head warpage			–	0.10 (0.004)

VALVE TIMING/CYLINDER NUMBER

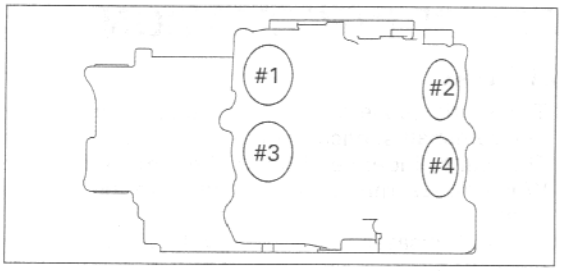

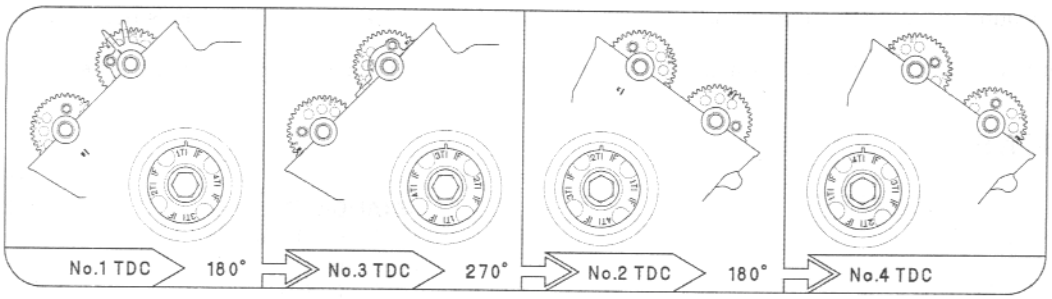

TORQUE VALUES

Cylinder head flange bolt	44 N·m (4.5 kgf·m, 33 lbf·ft)	Apply oil to the threads and flange surface
Cylinder head orifice bolt	8 N·m (0.8 kgf·m, 6 lbf·ft)	
Camshaft holder flange bolt	12 N·m (1.2 kgf·m, 9 lbf·ft)	Apply oil to the threads and flange surface
Cylinder head cover bolt	10 N·m (1.0 kgf·m, 7 lbf·ft)	
Breather plate flange bolt	12 N·m (1.2 kgf·m, 9 lbf·ft)	Apply a locking agent to the threads
PAIR check reed valve cover SH bolt	12 N·m (1.2 kgf·m, 9 lbf·ft)	CT bolt
Cam sprocket UBS bolt	20 N·m (2.0 kgf·m, 14 lbf·ft)	Apply a locking agent to the threads
Cam chain tensioner flange bolt	26 N·m (2.7 kgf·m, 20 lbf·ft)	Apply a locking agent to the threads
Cam chain guide flange bolt	12 N·m (1.2 kgf·m, 9 lbf·ft)	Apply a locking agent to the threads
Cylinder head stud bolt (exhaust pipe stud bolt)	See page 1-15	
Ignition pulse generator rotor/primary drive gear flange special bolt	103 N·m (10.5 kgf·m, 76 lbf·ft)	Apply oil to the threads and flange surface
Spark plug	12 N·m (1.2 kgf·m, 9 lbf·ft)	
ECT (Engine Coolant Temperature/ thermo sensor	23 N·m (2.3 kgf·m, 17 lbf·ft)	

TOOLS

Compression gauge attachment	07RMJ-MY50100	Equivalent commercially available in U.S.A.
Valve spring compressor	07757-0010000	
Valve spring compressor attachment	07959-KM30101	
Valve spring compressor attachment	070ME-MCW0100	
Tensioner holder B	07ZMG-MCAA400	
Tappet hole protector	07HMG-MR70002	
Valve guide driver	07HMD-ML00101	
Valve guide reamer, 4.5 mm	07HMH-ML00101	
Valve seat cutters		-these are commercially available in U.S.A.
Seat cutter, 27.5 mm (45° EX)	07780-0010200	
Seat cutter, 29 mm (45° IN)	07780-0010300	
Flat cutter, 28 mm (32° EX)	07780-0012100	
Flat cutter, 30 mm (32° IN)	07780-0012200	
Interior cutter, 30 mm (60° IN/EX)	07780-0014000	
Cutter holder, 4.5 mm	07781-0010600	

TROUBLESHOOTING

- Engine top-end problems usually affect engine performance. These problem can be diagnosed by a compression test or by tracing engine noises to the top-end with a sounding rod/stethoscope.
- If the performance is poor at low speeds, check for white smoke in the crankcase breather hose. If the hose is smoky, check for a seized piston ring (page 12-13).

Compression too low, hard starting or poor performance at low speed

- Valves:
  - Incorrect valve adjustment
  - Burned or bent valve
  - Incorrect valve timing
  - Broken valve spring
  - Uneven valve seating
- Cylinder head:
  - Leaking or damaged head gasket
  - Warped or cracked cylinder head
- Worn cylinder, piston or piston rings (page 12-13)

Compression too high, overheating or knocking

- Excessive carbon build-up on piston crown or on combustion chamber

Excessive smoke

- Cylinder head:
  - Worn valve stem or valve guide
  - Damaged stem seal
- Worn cylinder, piston or piston rings (page 12-13)

Excessive noise

- Cylinder head:
  - Incorrect valve adjustment
  - Sticking valve or broken valve spring
  - Damaged or worn camshaft
  - Loose or worn cam chain
  - Worn or damaged cam chain
  - Worn or damaged cam chain tensioner
  - Worn cam sprocket teeth
- Worn cylinder, piston or piston rings (page 12-13)

Rough idle

- Low cylinder compression

CYLINDER COMPRESSION TEST

Warm up the engine to normal operating temperature.
Open and support the fuel tank using the equipped tools (page 3-5).
Stop the engine and remove the all direct ignition coil/spark plug caps and spark plugs (page 3-7).

Disconnect the fuel pump 2P (Brown) connector.

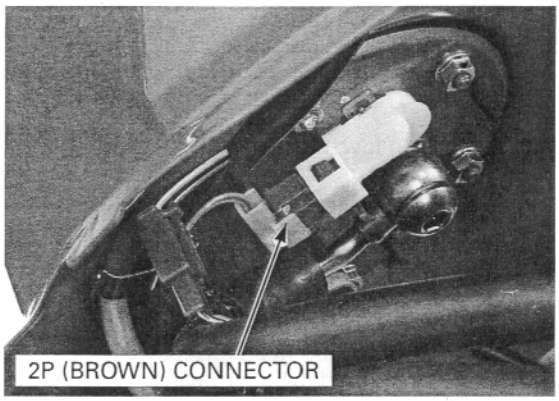

Install a compression gauge into the spark plug hole.

TOOL:

Compression gauge attachment	**07RMJ-MY50100 (Equivalent commercially available in U.S.A.)**

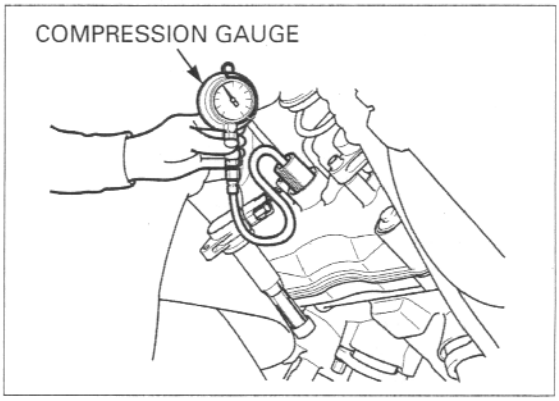

Open the throttle all the way and crank the engine with the starter motor until the gauge reading stops rising.

To avoid discharging the battery, do not operate the starter motor for more than seven seconds.

The maximum reading is usually reached within 4 – 7 seconds.

Compression pressure:
981 - 1,373 kPa (10.0 - 14.0 kgf/cm², 142 - 178 psi) at 300 rpm

Low compression can be caused by:
- Blown cylinder head gasket
- Improper valve adjustment
- Valve leakage
- Worn piston ring or cylinder

High compression can be caused by:
- Carbon deposits in combustion chamber or on piston crown

CYLINDER HEAD COVER REMOVAL

Open and support the fuel tank using the equipped tools (page 3-5).

Remove the bolt and fuel tank stopper chain from the fuel tank.

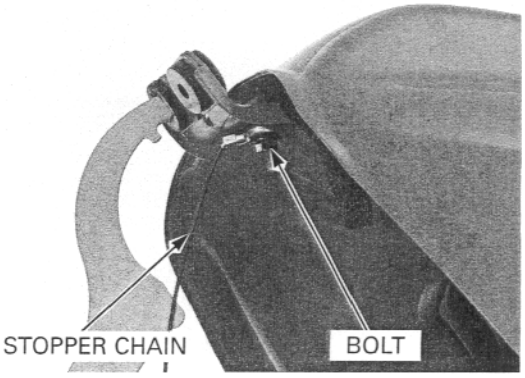

Disconnect the fuel tank air vent hose and overflow hose.

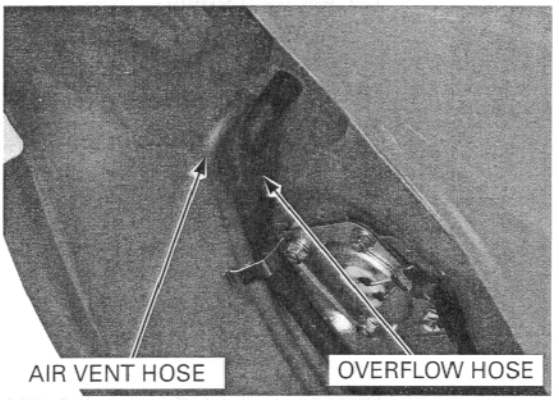

Disconnect the fuel pump 2P (Brown) connector and fuel unit 2P (Blue) connector.

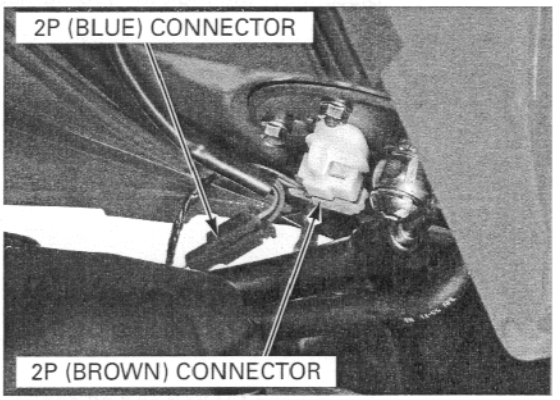

Close the fuel tank, then remove the fuel tank rear mounting bolts.

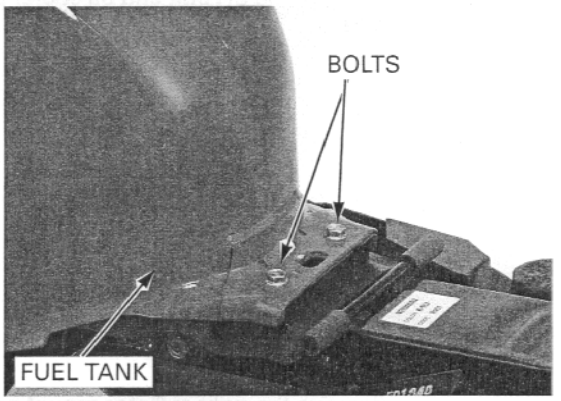

Be careful not to damage the fuel tank.

Place the fuel tank upside down and remove the fuel tank from the frame without disconnecting the fuel hoses.

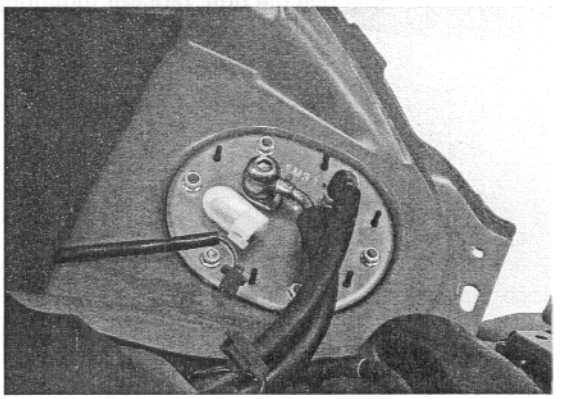

For the front cylinder head cover removal, remove the following:

- Side cowls (page 2-8)
- Air cleaner housing (page 5-60)

Remove the oil cooler mounting bolts.

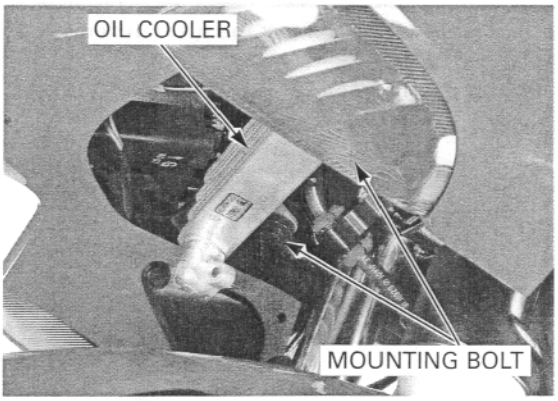

Disconnect the radiator sub-harness 2P (Black) connector.

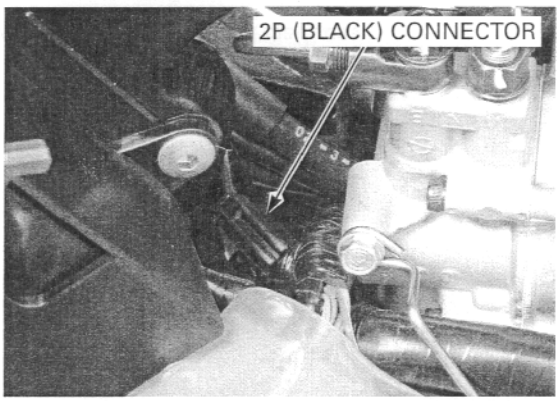

Remove the SH bolt and oil cooler pipe stay on each side.

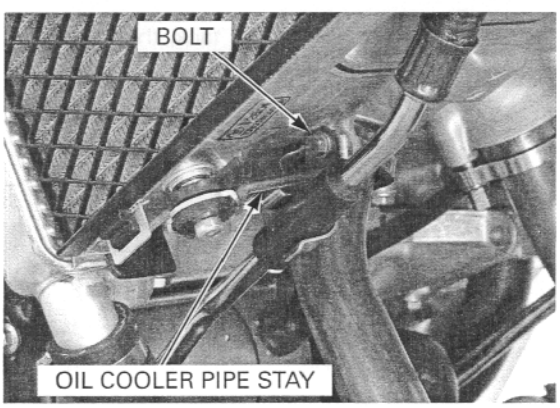

Remove the right radiator mounting bolt and collar.

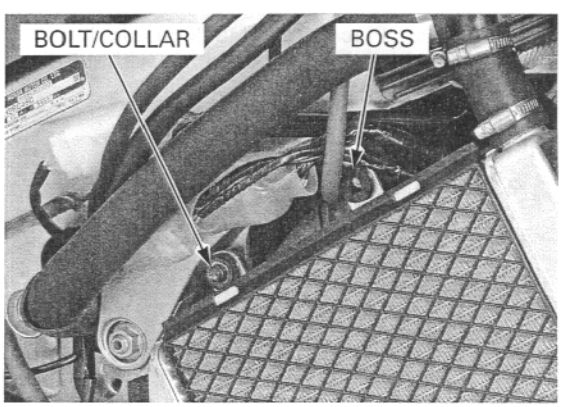

Remove the left radiator mounting bolt and collar.
Release the both radiator from the bosses on the frame.
Lower the radiator and oil cooler without disconnecting water hoses and oil pipes.

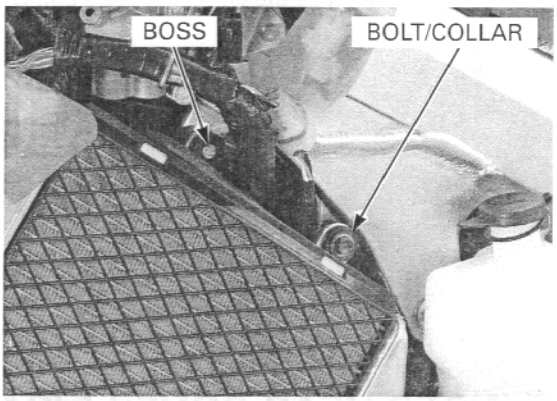

Disconnect the PAIR air hose from the PAIR air check reed valve cover.

Disconnect the bolts, direct ignition coils/spark plug caps from the cylinder head cover.

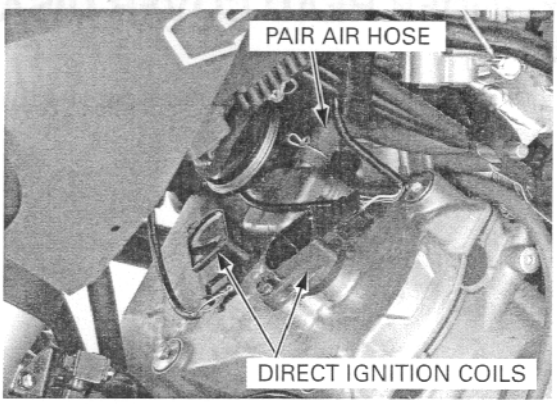

For the rear cylinder head cover removal, remove the following:

Disconnect the crankcase breather hose and PAIR air hose.
Remove the bolts, direct ignition coils/spark plug caps from the cylinder head cover.

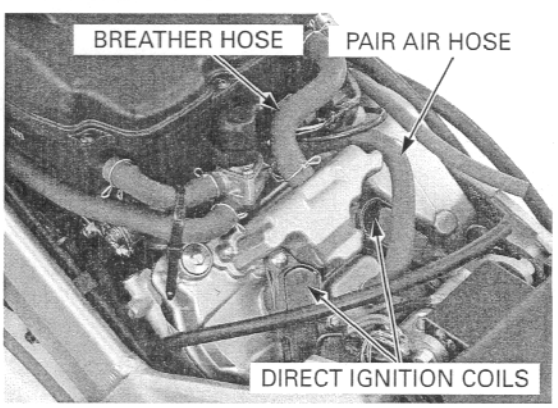

Remove the bolts, mounting rubbers and front cylinder head cover.

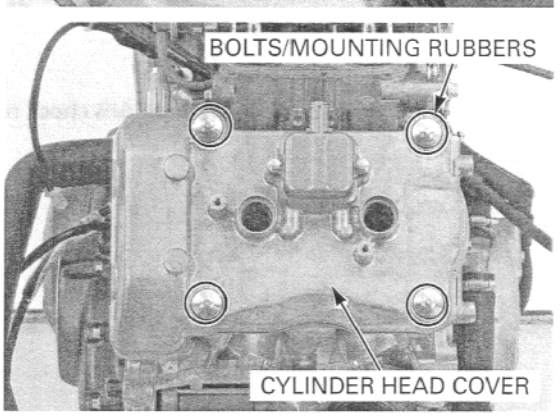

Remove the air joint collars and O-rings.

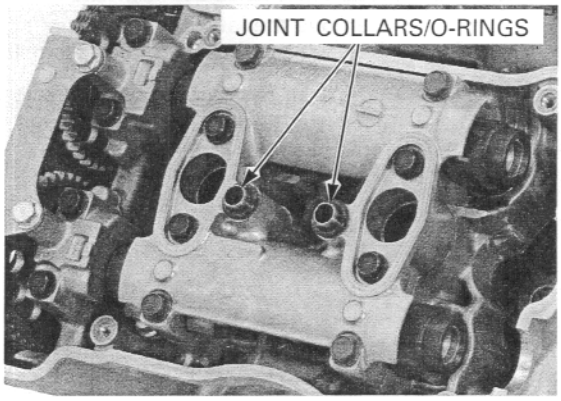

CYLINDER HEAD COVER DISASSEMBLY

Remove the cylinder head cover packing.

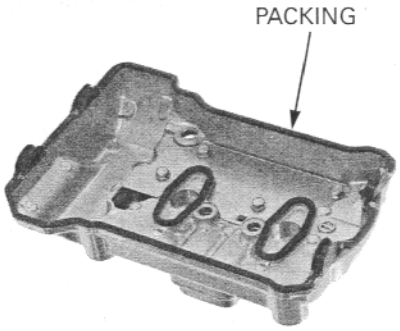

Remove bolts and breather plate and gasket from the rear cylinder head cover.

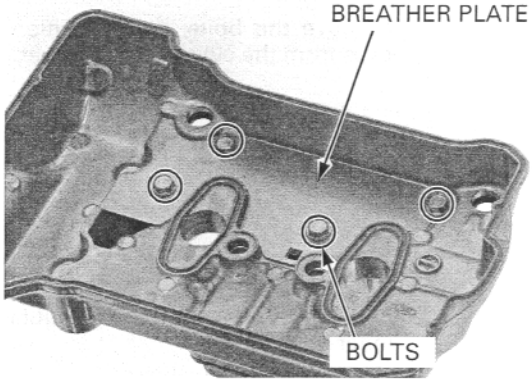

Remove the bolts and PAIR check reed valve cover.

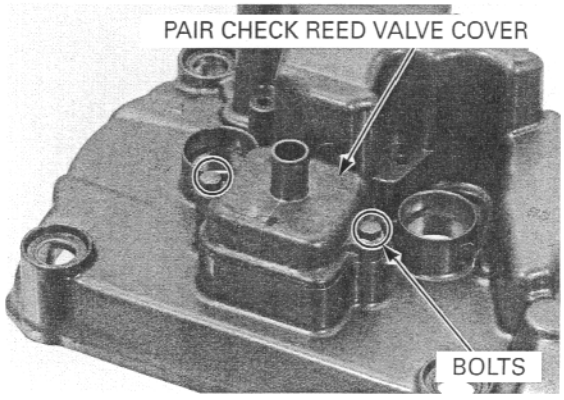

Check the PAIR check reed valve for wear or damage, replace if necessary.

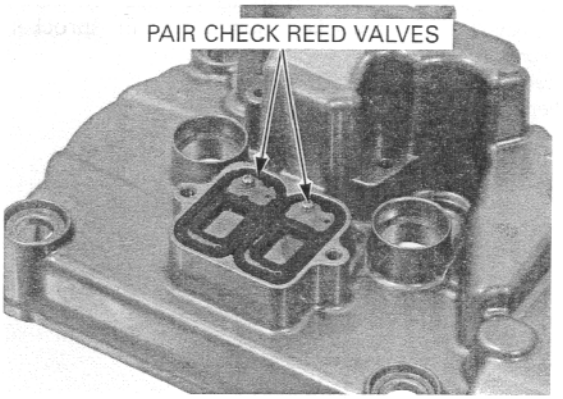

FRONT CAMSHAFT REMOVAL

Remove the front cylinder head cover (page 8-6).

Remove the timing hole cap and O-ring.

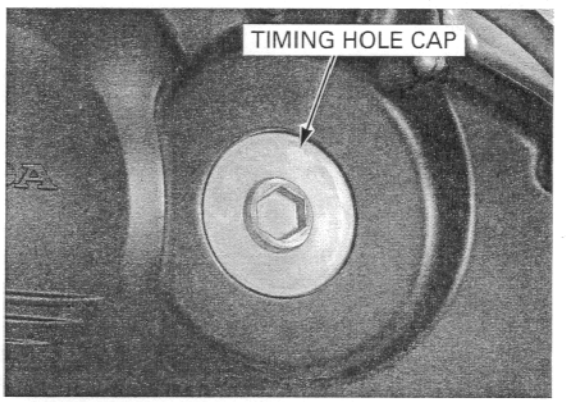

Turn the crankshaft clockwise, align the "4T" mark on the ignition pulse generator rotor with the index mark on the right crankcase cover.

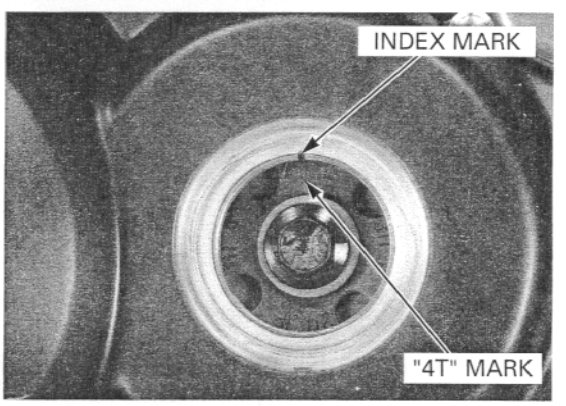

Make sure that the index lines on the front cam sprocket are facing outward and that the No.4 piston is at TDC (Top Dead Center) on the compression stroke.

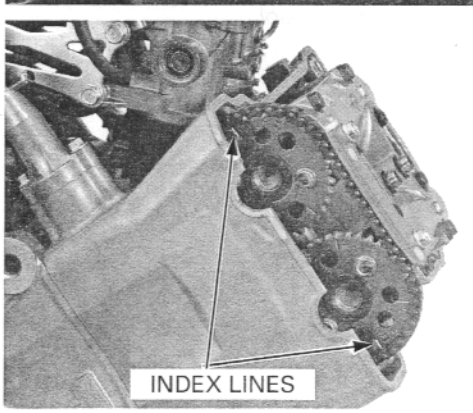

It is not necessary to remove the cam sprocket from the camshaft except when replacing the camshaft and/or cam sprocket.

If you plan to replace the camshaft and/or cam sprocket, loosen the cam sprocket bolts as follows:

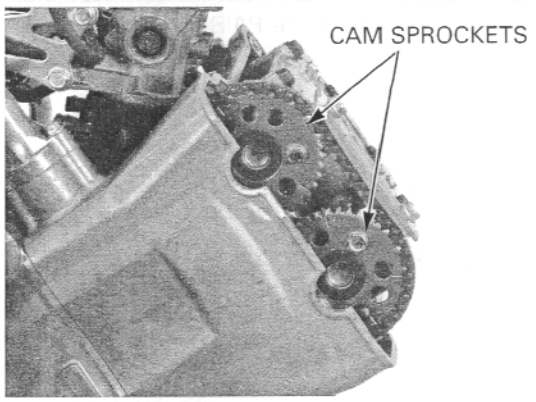

Be careful not to drop the cam sprocket bolts into the crankcase.

- Remove the cam sprocket bolts from the intake and exhaust camshafts.

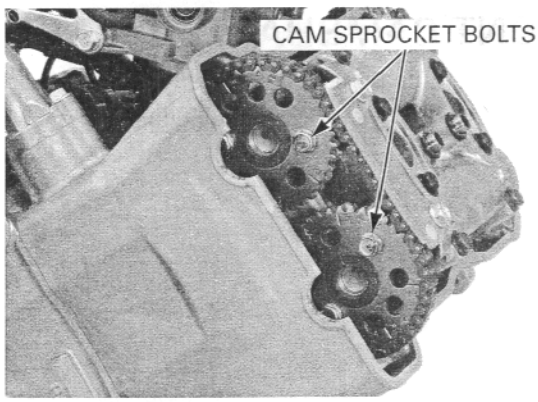

- Turn the crankshaft one full turn (360°), remove the other cam sprocket bolts from the camshafts.

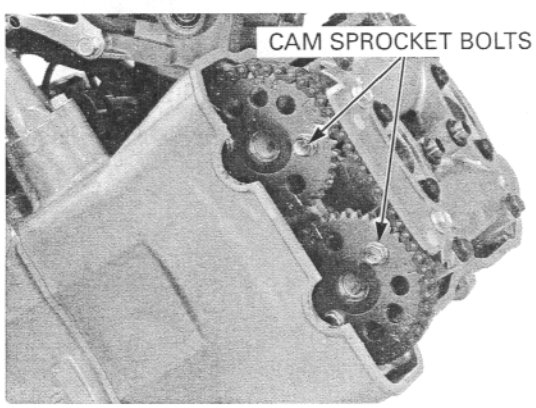

Turn the front cylinder cam chain tensioner lifter shaft fully in (clockwise) and secure it using the stopper tool.

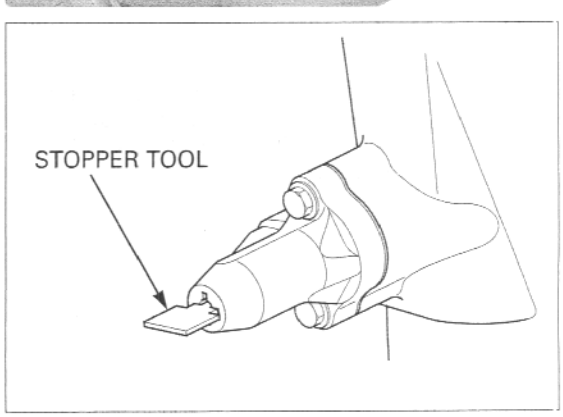

This tool can easily be made from a thin (1 mm thickness) piece of steel.

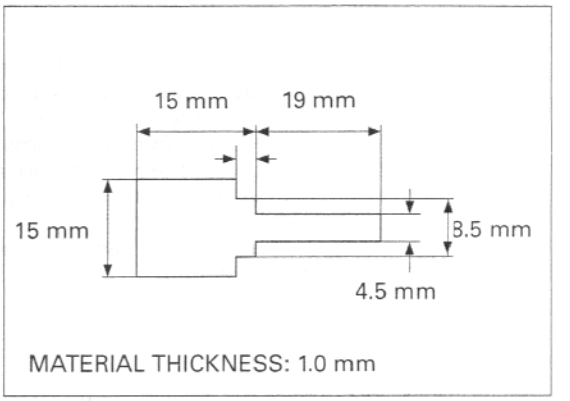

Remove the bolts and cam chain guide B.

Remove the cam sprocket from the camshaft.

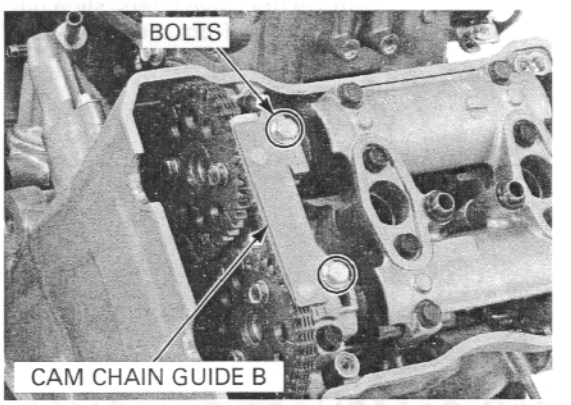

Suspend the cam chain with a piece of wire to prevent the chain from falling into the crankcase.

Loosen and remove the camshaft holder B bolts gradually in several steps and remove the camshaft holder B.

Loosen the camshaft holder A bolts and then remove the camshaft holder A.

NOTICE

From outside to inside, loosen the bolts in a criss-cross pattern in several steps or the camshaft holder might break.

Do not forcibly remove the dowel pins from the camshaft holder.

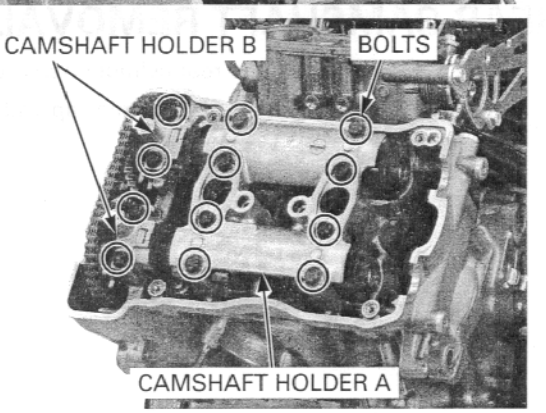

Remove the joint collars and O-rings from the front cylinder head.

Remove the front cylinder camshafts.

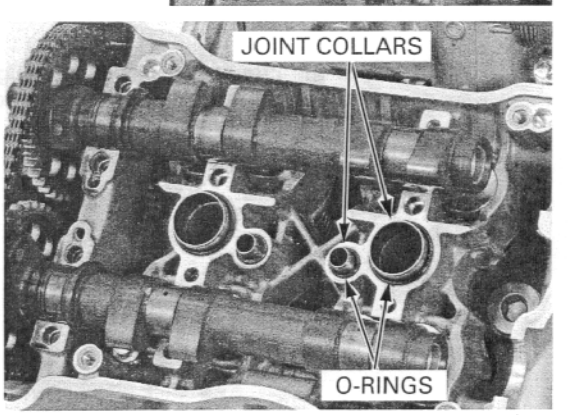

Remove the valve lifters and shims from the normal valve lifter bore.

- Be careful not to damage the valve lifter bore.
- Shim may stick to the inside of the valve lifter. Do not allow the shims to fall.
- Mark all valve lifters and shims to ensure correct reassembly in their original locations.
- The valve lifter can be easily removed with a valve lapping tool or magnet.
- The shims can be easily removed with a tweezers or a magnet.

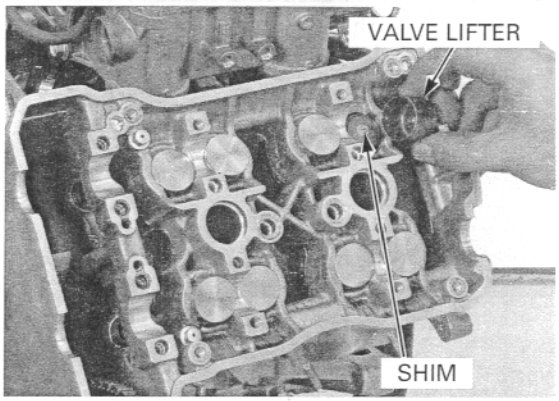

Remove the valve lifters, slide pin holders and outer valve springs from the VTEC valve lifter bore.

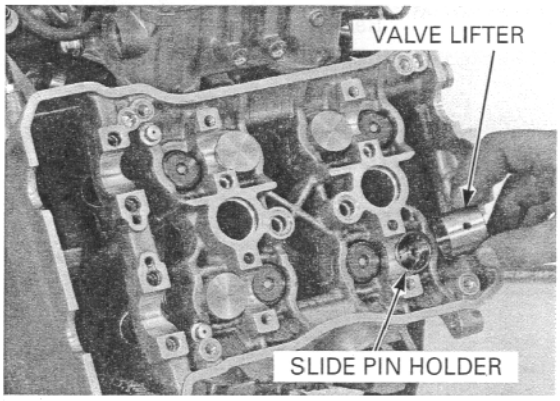

REAR CAMSHAFT REMOVAL

Remove the rear cylinder head cover (page 8-6).

Remove the timing hole cap and O-ring.

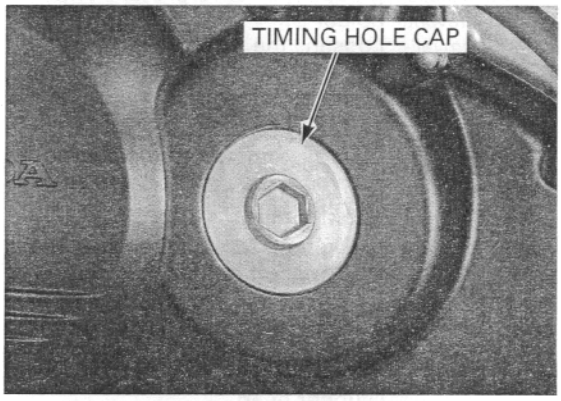

Turn the crankshaft clockwise, align the "3T" mark on the ignition pulse generator rotor with the index mark on the right crankcase cover.

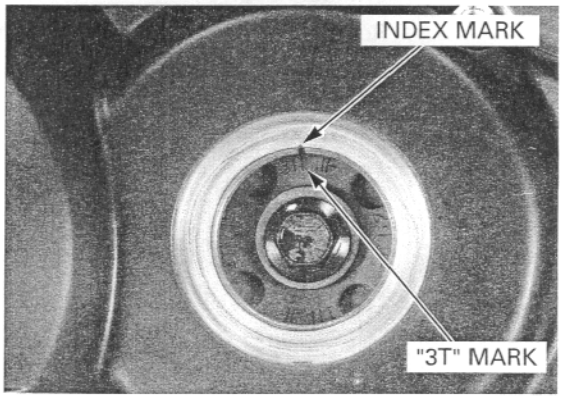

Make sure that the index lines on the rear cam sprocket are facing outward and that the No.3 piston is at TDC (Top Dead Center) on the compression stroke.

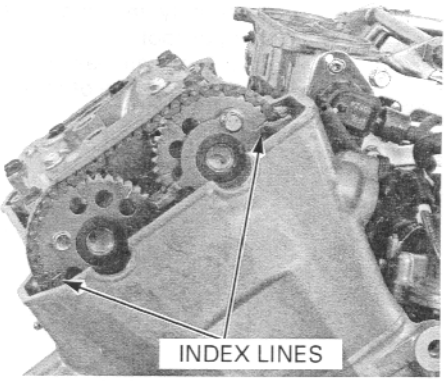

It is not necessary to remove the cam sprocket from the camshaft except when replacing the camshaft and/or cam sprocket.

If you plan to replace the camshaft and/or cam sprocket, remove the cam sprocket bolts and cam pulse generator rotor bolts as follows:

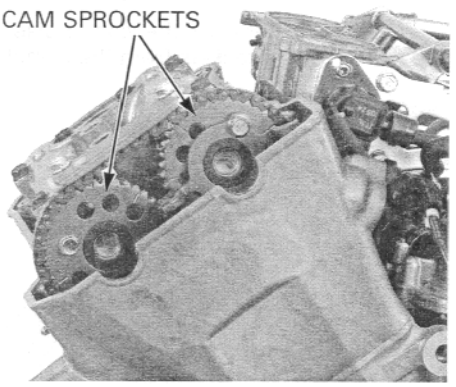

Be careful not to drop the cam sprocket bolts into the crankcase.

- Remove the cam sprocket bolts from intake and exhaust camshafts.

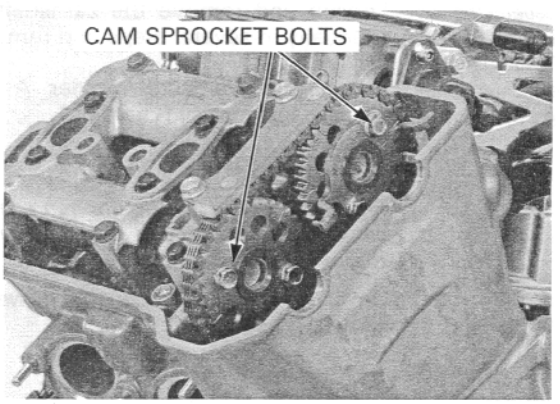

- Turn the crankshaft one full turn (360°), remove the other cam sprocket bolts from the camshafts.

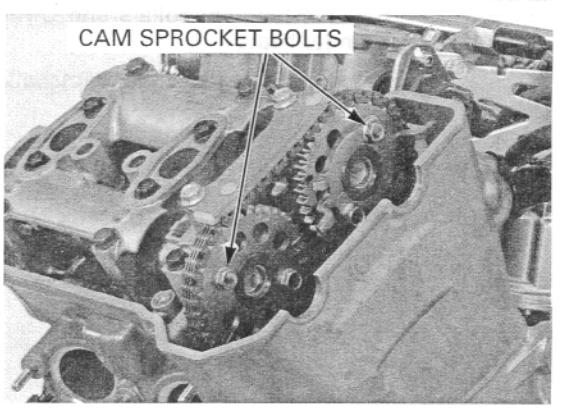

Turn the rear cylinder cam chain tensioner lifter shaft fully in (clockwise) and secure it using the stopper tool.
This tool can easily be made from a thin (1 mm thickness) piece of steel (page 8-13).

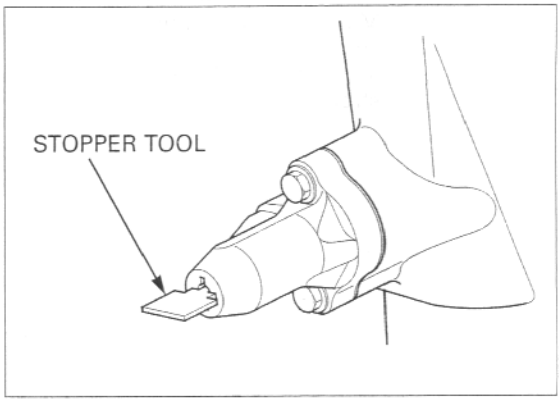

Remove the bolts and cam chain guide B.

Remove the cam pulse generator rotor and cam sprockets from the camshaft.

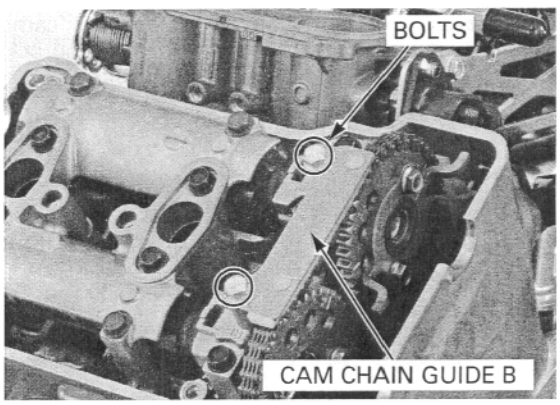

Suspend the cam chain with a piece of wire to prevent the chain from falling into the crankcase.

Loosen and remove the camshaft holder B bolts gradually in several steps and remove the camshaft holder B.
Loosen the camshaft holder A bolts and then remove the camshaft holder A.

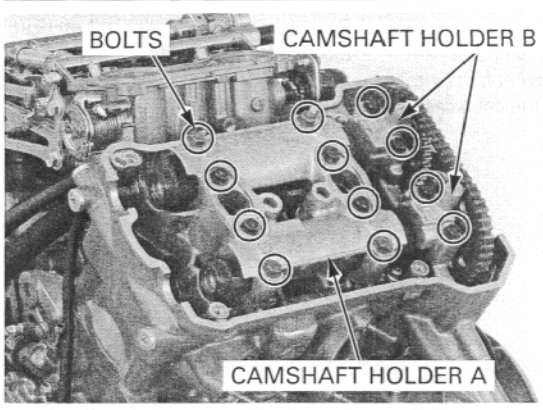

NOTICE

From outside to inside, loosen the bolts in a criss-cross pattern in several steps or the camshaft holder might break.

Do not forcibly remove the dowel pins from the camshaft holder.

Remove the joint collars and O-rings from the rear cylinder head.

Remove the rear cylinder camshaft.

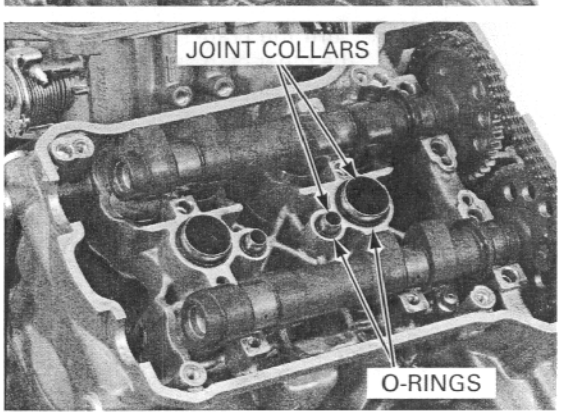

Remove the valve lifters and shims from the normal valve lifter bore.

- Be careful not to damage the valve lifter bore.
- Shim may stick to the inside of the valve lifter. Do not allow the shims to fall.
- Mark all valve lifters and shims to ensure correct reassembly in their original locations.
- The valve lifter can be easily removed with a valve lapping tool or magnet.
- The shims can be easily removed with tweezers or a magnet.

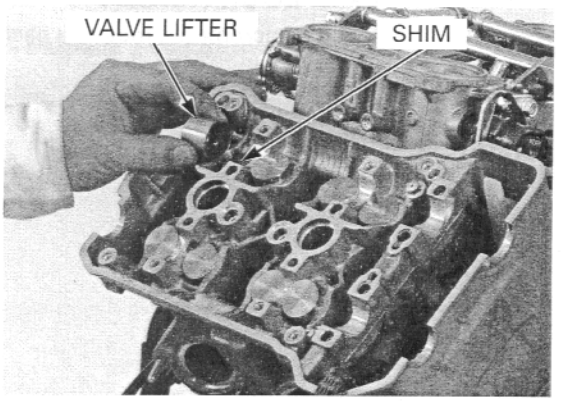

Remove the valve lifters, slide pin holders and outer valve springs from the VTEC valve lifter bore.

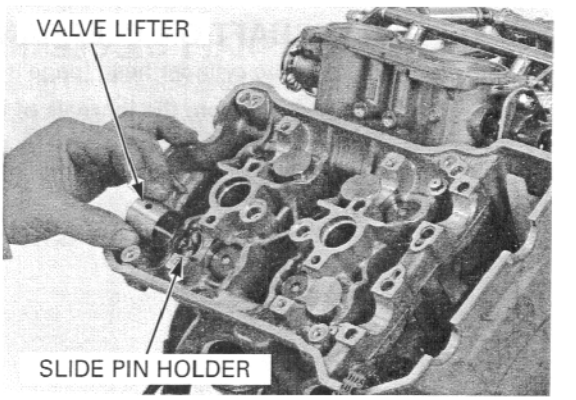

CAMSHAFT INSPECTION

CAMSHAFT HOLDER

Inspect the bearing surface of the camshaft holder for scoring, scratches or evidence of insufficient lubrication.

Inspect the oil orifices of the holders for clogs.

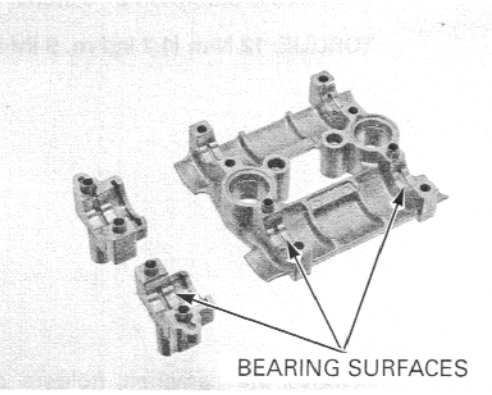

CAMSHAFT RUNOUT

Support both ends of the camshaft journals with V-blocks and check the camshaft runout with a dial gauge.

SERVICE LIMIT: 0.05 mm (0.002 in)

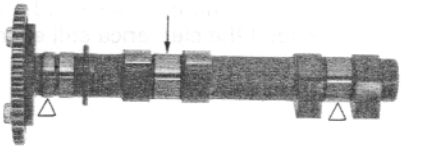

CAM LOBE HEIGHT

Using a micrometer, measure each cam lobe height.

SERVICE LIMIT:
IN: 36.33 mm (1.430 in)
EX: 36.18 mm (1.424 in)

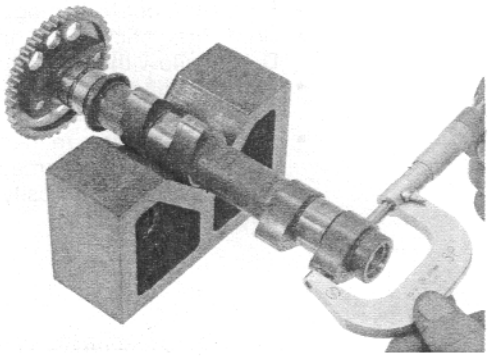

CAMSHAFT OIL CLEARANCE

Remove the cylinder head (page 8-19).

Wipe any oil from the journals of the camshaft, cylinder head and camshaft holders.
Lay a strip of plastigauge lengthwise on top of each camshaft journal.

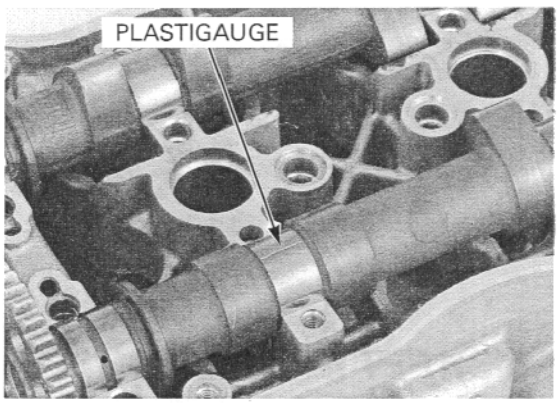

Do not rotate the camshaft when using plastigauge.

Install the camshaft holders and tighten the bolts in a crisscross pattern in 2 - 3 steps.

TORQUE: 12 N·m (1.2 kgf·m, 9 lbf·ft)

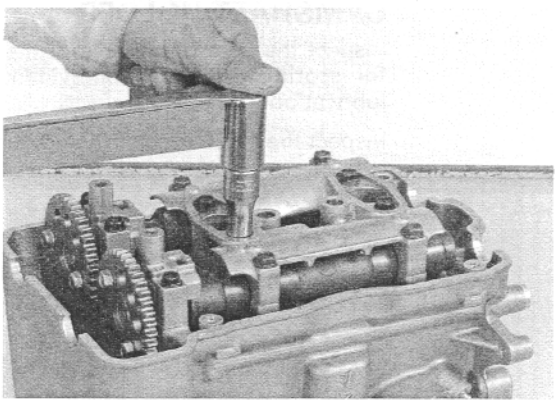

Remove the camshaft holders and measure the width of each plastigauge.
The widest thickness determines the oil clearance.

SERVICE LIMIT: 0.10 mm (0.004 in)

When the service limits are exceeded, replace the camshaft and recheck the oil clearance.
Replace the cylinder head and camshaft holders as a set if the clearance still exceeds the service limit.

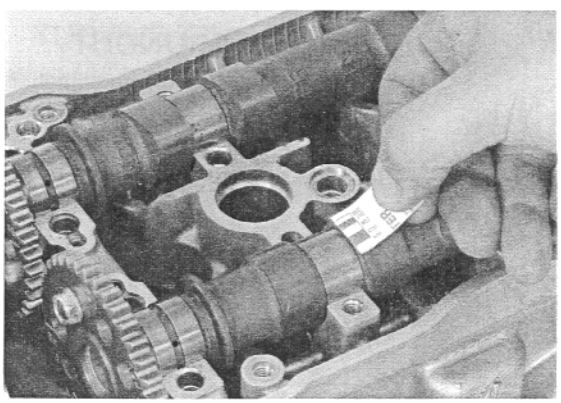

CYLINDER HEAD REMOVAL

- The front cylinder head can be removed without removing the engine from the frame.
- The rear cylinder head removal requires engine removal.

Remove the following:

- Throttle body (page 5-63)
- Front camshaft (page 8-11)
- Rear camshaft (page 8-14)

Drain the coolant from the system (page 6-6).

Remove the cylinder drain bolt and sealing washer. Drain coolant from the cylinder.



Remove the SH bolts, cam chain tensioner lifter and gasket.

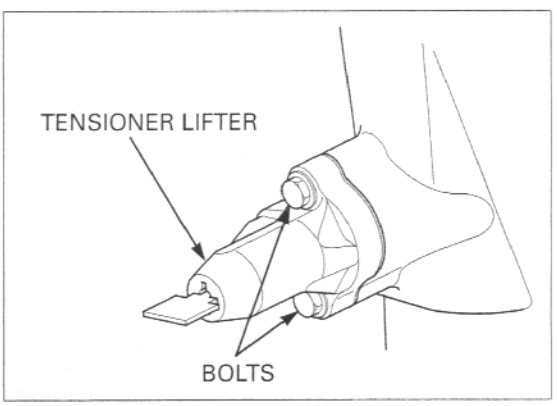

For the front cylinder head removal, disconnect the ECT sensor connector from the front cylinder head.

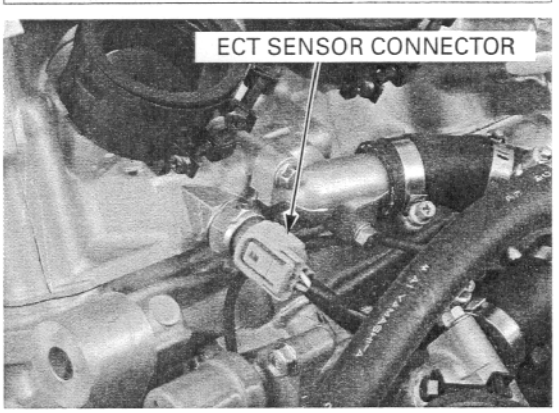

For the rear cylinder head removal, remove the bolt and cam pulse generator from the rear cylinder head.

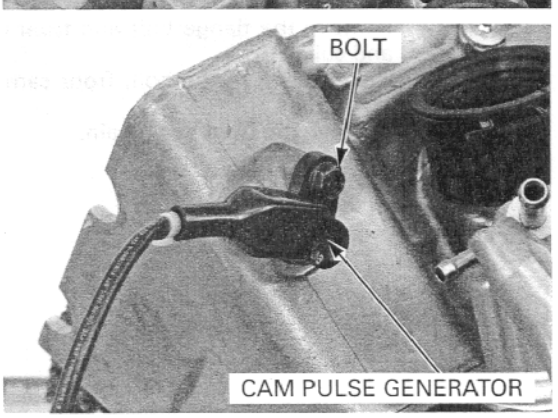

Remove the SH bolts and water joints from the front and rear cylinder heads.

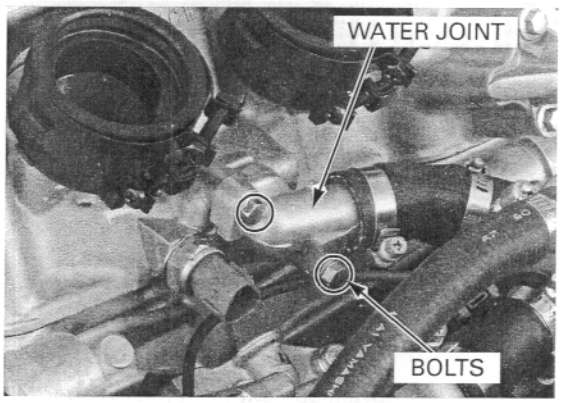

Remove the two 6 mm flange bolts.

Remove the six 9 mm special bolts/washers.

Remove the cylinder head.

Loosen the 9 mm bolts in a criss-cross pattern in 2 – 3 steps.

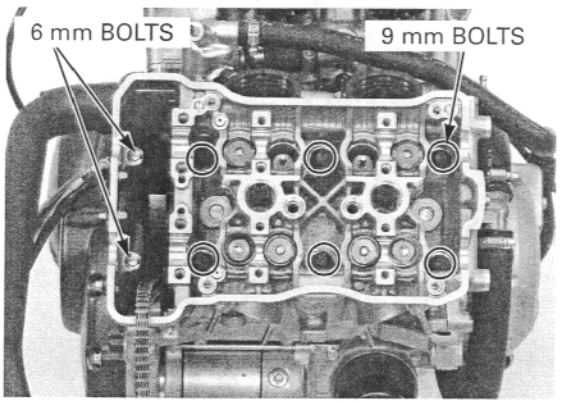

Remove the gasket and dowel pins.

Remove the oil through collar and O-ring.

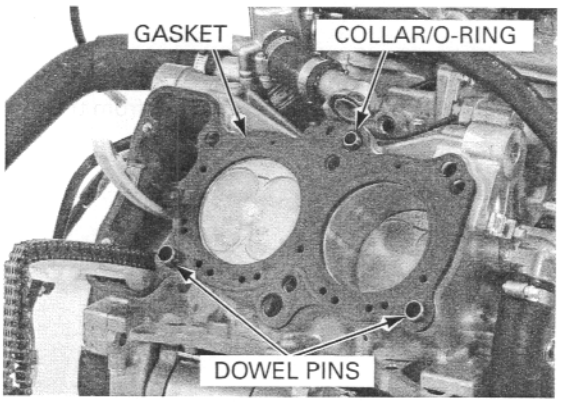

Remove the right crankcase cover (page 9-14) and ignition pulse generator rotor (page 19-11).

Remove the flange bolt and front cam chain guide and collar.

Remove the flange bolt, front cam chain tensioner and collar.

Remove the front cam chain.

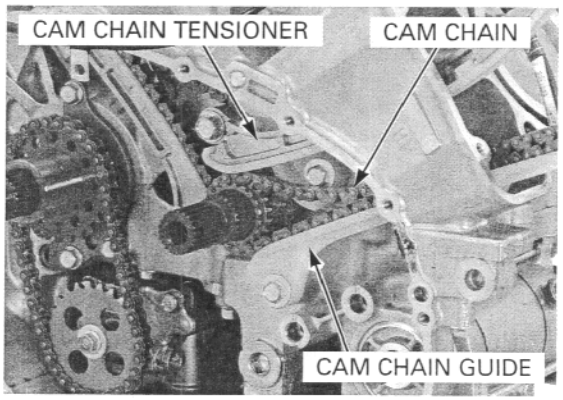

Remove the flange bolt and rear cam chain guide. Remove the flange bolt, rear cam chain tensioner and collar.

Remove the front and rear cam chains and timing sprocket from the crankshaft.

Remove the rear cam chain.

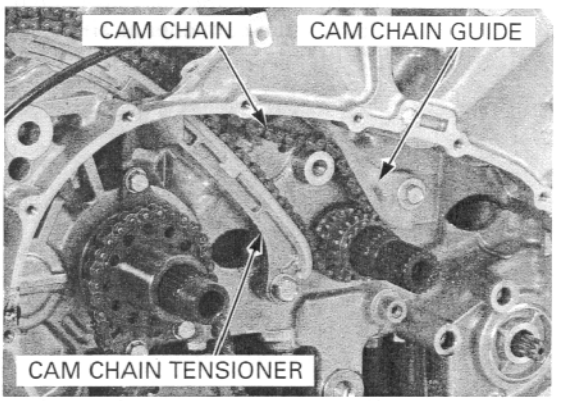

Remove the timing sprocket from the crankshaft.

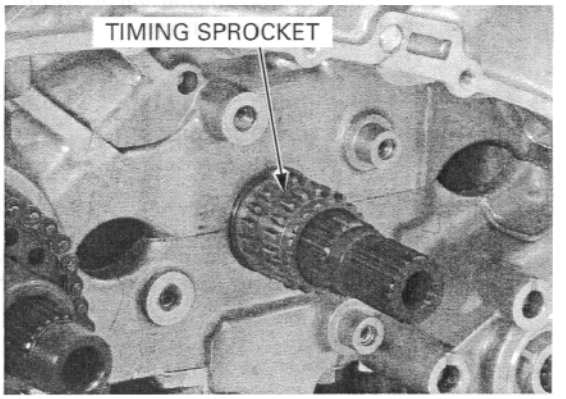

CYLINDER HEAD DISASSEMBLY

Loosen the screws and remove the insulators from the front and rear cylinder head.

Remove the ECT sensor from the front cylinder head.

Remove the spark plugs from the cylinder head.

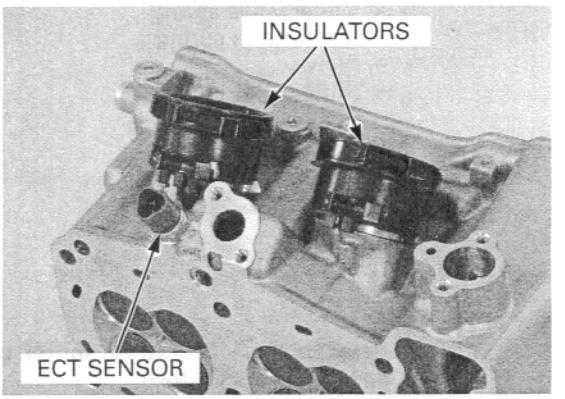

Install the tappet hole protector into the valve lifter bore.

TOOL:

Tappet hole protector	**07HMG-MR70002**

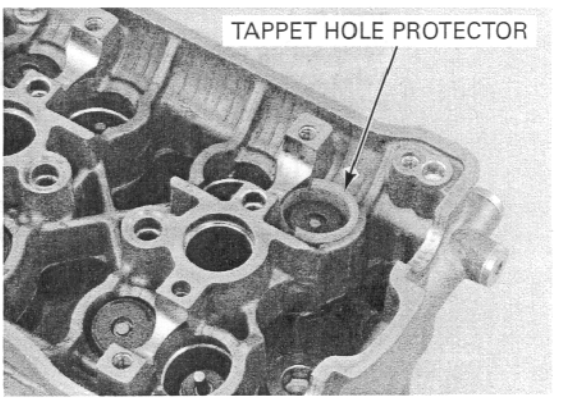

An equivalent tool can easily be made from a plastic 35 mm film container as shown.

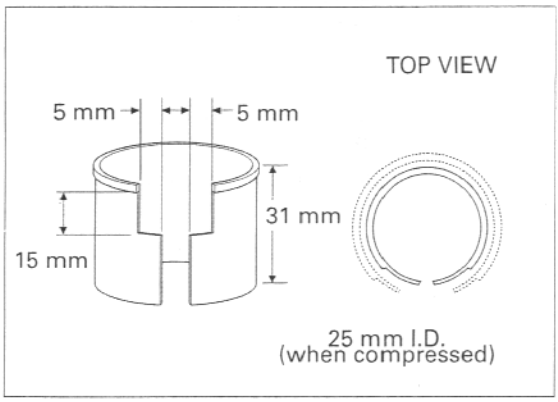

Remove the normal valve spring cotters using the special tools as shown.

TOOLS:

Valve spring compressor	**07757-0010000**
Valve spring compressor attachment	**07959-KM30101**

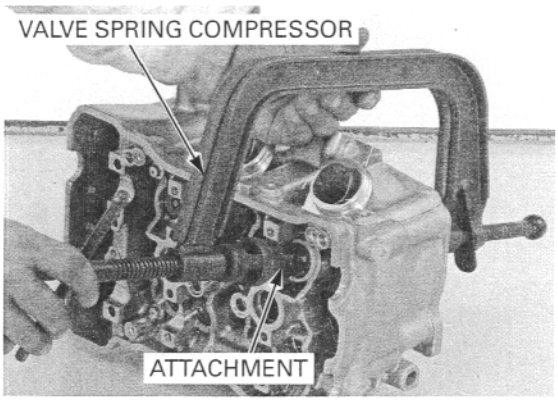

NOTICE

To prevent loss of tension, do not compress the valve springs more than necessary to remove the cotters.

Mark all parts during disassembly so they can be placed back in their original locations.

Remove the following:

- Spring retainer
- Outer valve spring
- Inner valve spring
- Valve
- Stem seal
- Valve spring seat

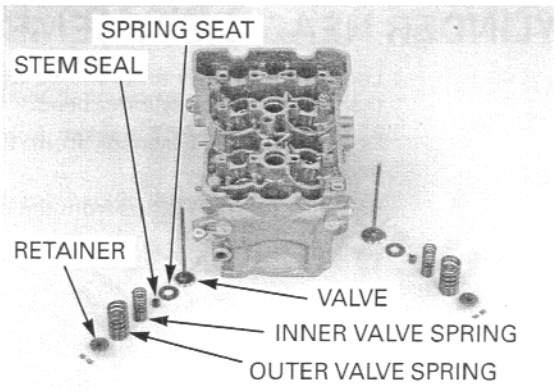

Remove the VTEC valve spring cotters using the special tools as shown.

TOOLS:

Valve spring compressor	**07757-0010000**
Valve spring compressor attachment	**070ME-MCW0100**

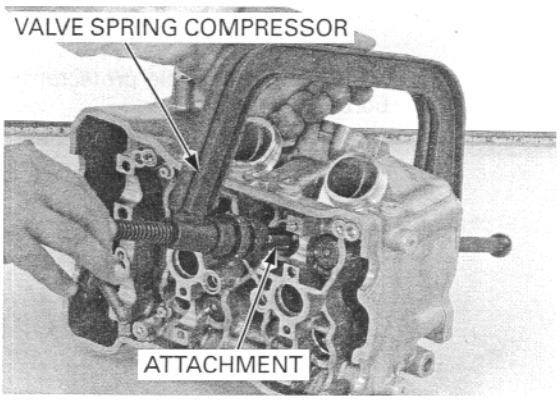

NOTICE

To prevent loss of tension, do not compress the valve springs more than necessary to remove the cotters.

Mark all parts during disassembly so they can be placed back in their original locations.

Remove the following:

- Spring retainer
- Inner valve spring
- Valve
- Stem seal
- Valve spring seat

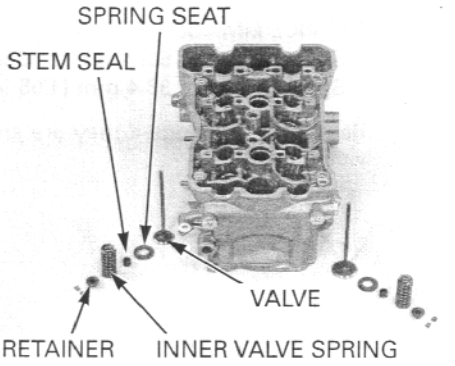

CYLINDER HEAD INSPECTION

CYLINDER HEAD

Avoid damaging the gasket surface.

Remove carbon deposits from the combustion chamber, being careful not to damage the gasket surface.

Check the spark plug hole and valve areas for cracks.

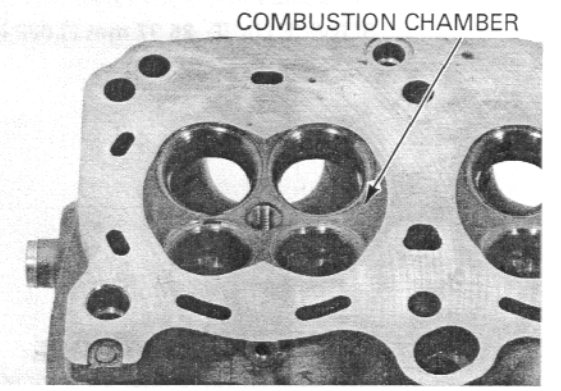

Check the cylinder head for warpage with a straight edge and feeler gauge.

SERVICE LIMIT: 0.10 mm (0.004 in)

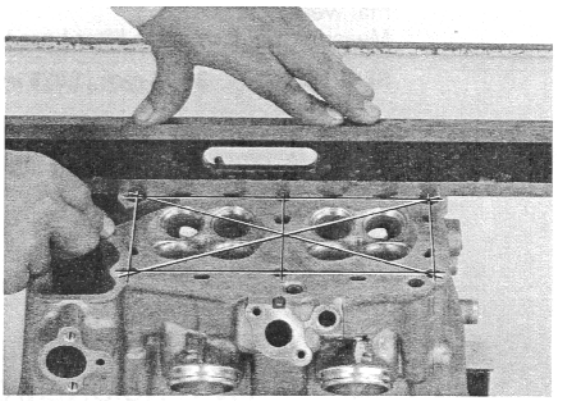

VALVE SPRING

Measure the normal side valve spring free length.

SERVICE LIMITS:
Spring A outer: 41.5 mm (1.63 in)
Spring A inner: 39.0 mm (1.54 in)

Replace the springs if they are shorter than the service limits.

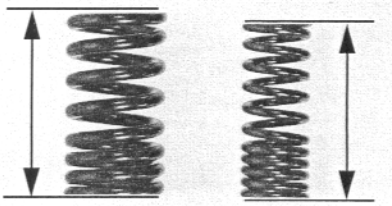

Measure the VTEC side valve spring free length.

SERVICE LIMITS:
Spring B outer: 53.2 mm (2.09 in)
Spring B inner: 38.4 mm (1.55 in)

Replace the springs if they are shorter than the service limits.

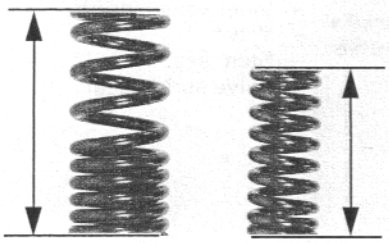

VALVE LIFTER

Inspect each valve lifter for scratches or abnormal wear.
Measure the each valve lifter O.D.

SERVICE LIMIT: 25.97 mm (1.022 in)

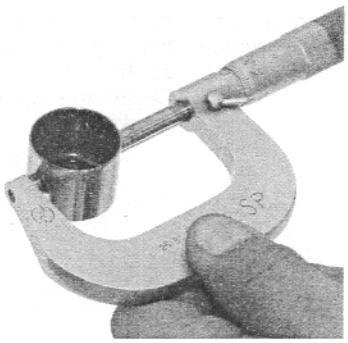

VALVE LIFTER BORE

Inspect each valve lifter bore for scratches or abnormal wear.
Measure the each valve lifter bore I.D.

SERVICE LIMIT: 26.04 mm (1.025 in)

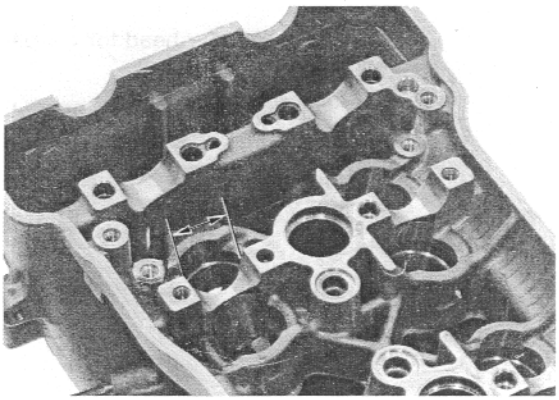

CAM CHAIN TENSIONER/CAM CHAIN GUIDE

Inspect the cam chain tensioner and cam chain guide for excessive wear or damage, replace if necessary.

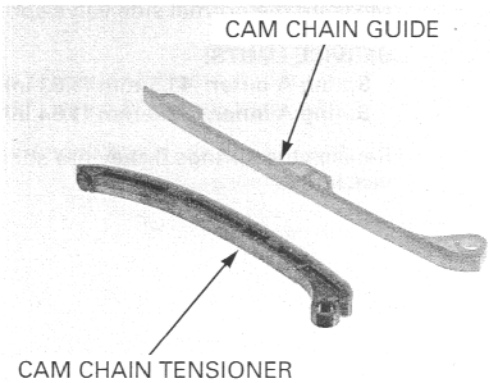

VALVE/VALVE GUIDE

Check that the valve moves smoothly in the guide.
Inspect each valve for bending, burning or abnormal stem wear.
Measure and record each valve stem O.D.

SERVICE LIMITS:
IN: 4.465 mm (0.1758 in)
EX: 4.455 mm (0.1754 in)

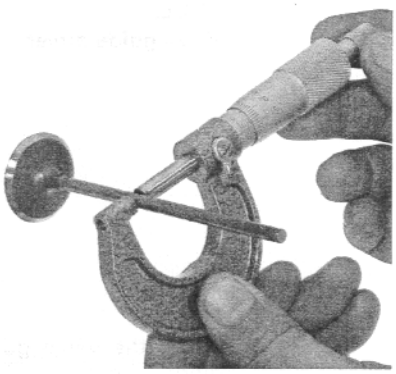

Ream the guides to remove any carbon deposits before checking clearances.
Insert the reamer from the combustion chamber side of the head and always rotate the reamer clockwise.

TOOL:
Valve guide reamer, 4.5 mm 07HMH-ML00101

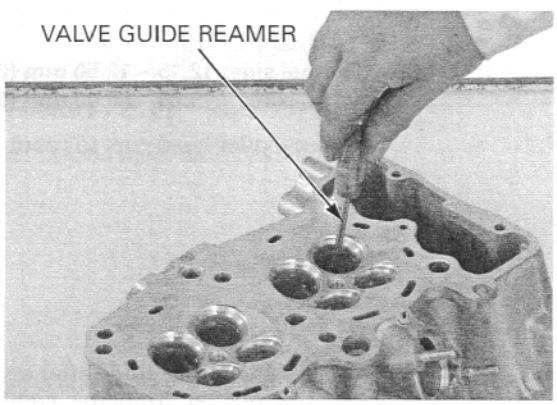

Measure and record each valve guide I.D.

SERVICE LIMIT: IN/EX: 4.540 mm (0.1787 in)

Subtract each valve stem O.D. from the corresponding guide I.D. to obtain the stem-to-guide clearance.

SERVICE LIMITS:
IN: 0.075 mm (0.0030 in)
EX: 0.085 mm (0.0033 in)

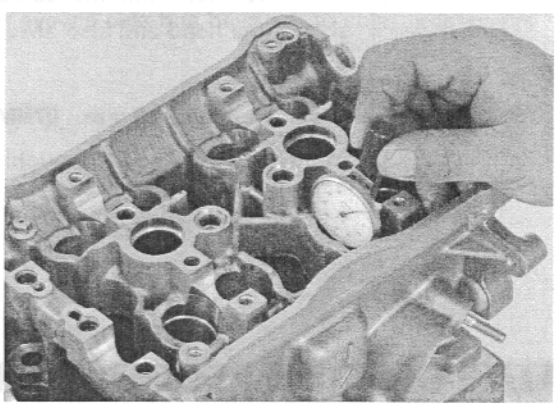

Reface the valve seats whenever the valve guides are replaced (page 8-27).

If the stem-to-guide clearance is out of standard, determine if a new guide with standard dimensions would bring the clearance within tolerance. If so, replace any guides as necessary and ream to fit.
If the stem-to-guide clearance is out of standard with the new guides, replace the valves and guides.

VALVE GUIDE REPLACEMENT

Chill the replacement valve guides in the freezer section of a refrigerator for about an hour.
Heat the cylinder head to 100 – 150°C (212 – 300°F) with a hot plate or oven.

NOTICE

Do not use a torch to heat the cylinder head; it may cause warping.

Support the cylinder head and drive out the valve guides from combustion chamber side of the cylinder head.

TOOL:
Valve guide driver 07HMD-ML00101

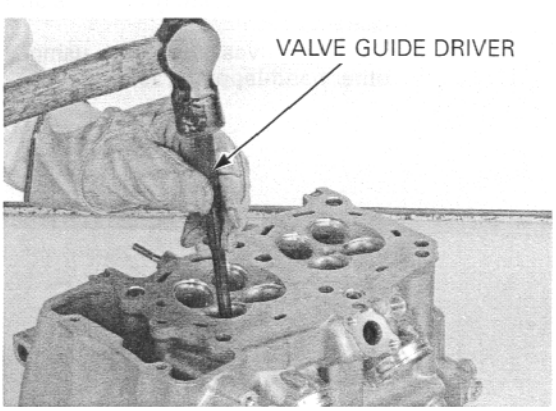

Drive in the guide to the specified depth from the top of the cylinder head.

TOOL:
Valve guide driver 07HMD-ML00101

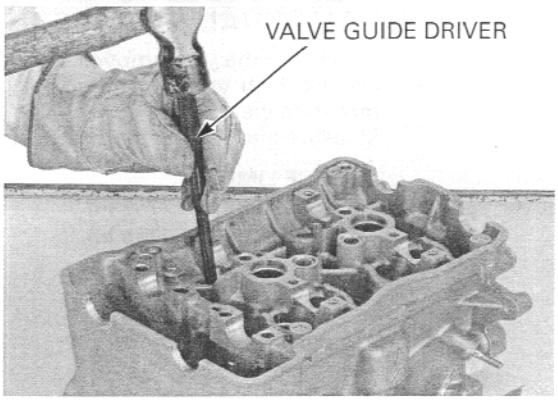

Install the valve guide while measuring the valve guide height from the cylinder head.

SPECIFIED DEPTH:
Normal side: 12.15 – 12.50 mm (0.478 – 0.492 in)
VTEC side: 19.65 – 20.00 mm (0.774 – 0.787 in)

Let the cylinder head cool to room temperature.

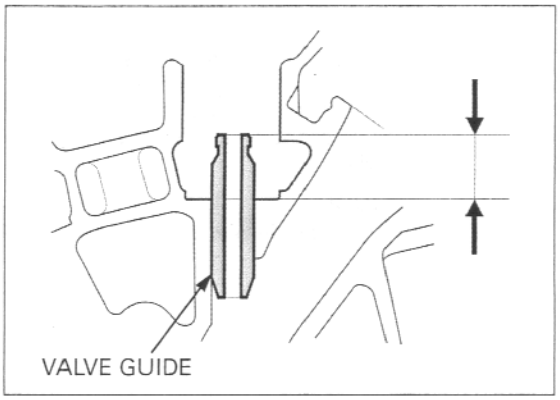

Use cutting oil on the reamer during this operation

Ream the new valve guide after installation.
Insert the reamer from the combustion chamber side of the head and also always rotate the reamer clockwise.

TOOL:
Valve guide reamer, 4.5 mm 07HMH-ML00101

Clean the cylinder head thoroughly to remove any metal particles.
Reface the valve seat (page 8-27).

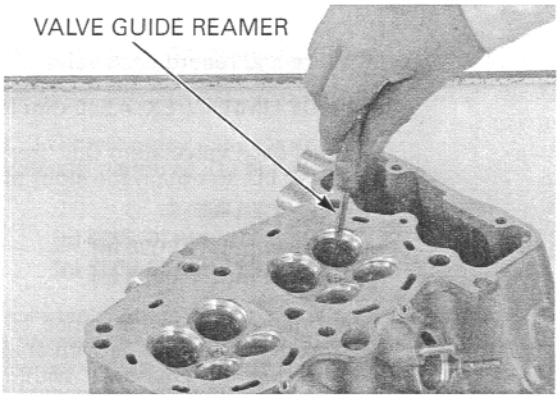

VALVE SEAT INSPECTION/REFACING

Clean the intake and exhaust valves thoroughly to remove carbon deposits.
Apply a light coating of Prussian Blue to the valve seats.
Tap the valves and seats using a rubber hose or other hand-lapping tool.

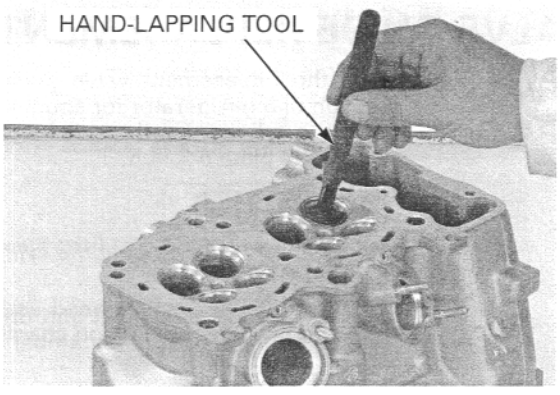

Remove the valve and inspect the valve seat face. The valve seat contact should be within the specified width and even all around the circumference.

STANDARD: 0.90 – 1.10 mm (0.035 – 0.043 in)
SERVICE LIMIT: 1.5 mm (0.06 in)

If the seat width is not within specification, reface the valve seat (page 8-27).

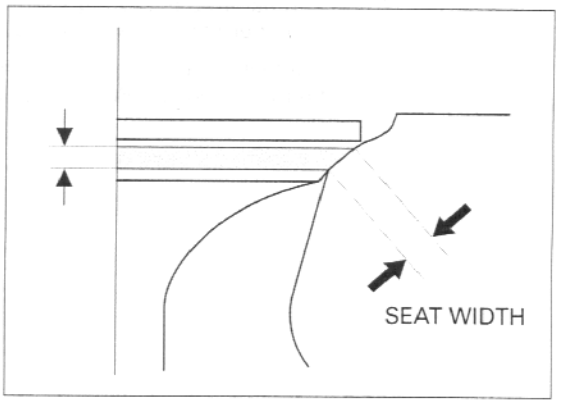

Inspect the valve seat face for:

- Uneven seat width:
  – Replace the valve and reface the valve seat.
- Damaged face:
  – Replace the valve and reface the valve seat.

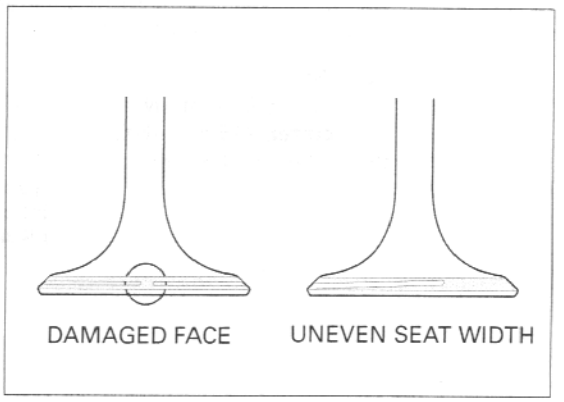

The valves cannot be ground. If a valve face is burned or badly worn or if it contacts the seat unevenly, replace the valve.

- Contact area (too high or too low)
  – Reface the valve seat.

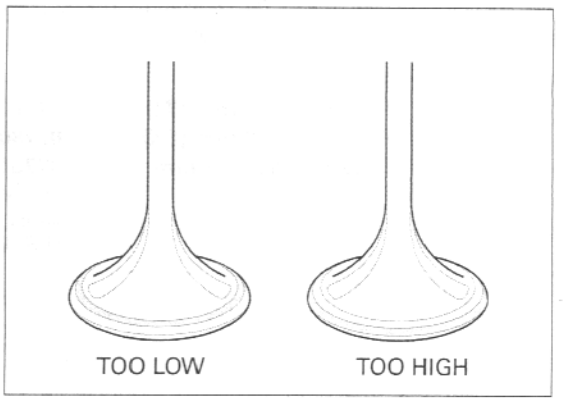

VALVE SEAT REFACING

Follow the refacing manufacturer's operating instructions.

Valve seat cutters/grinders or equivalent valve seat refacing equipment are recommended to correct worn valve seats.

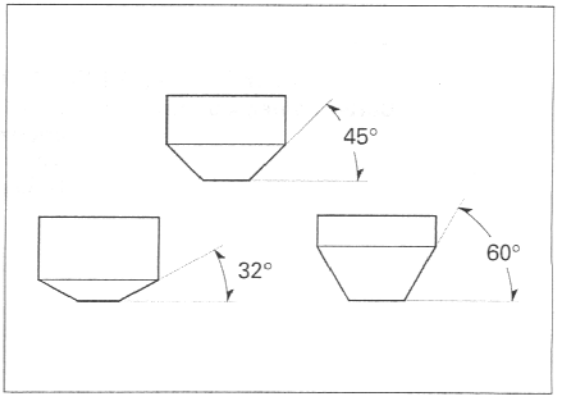

If the contact area is too high on the valve, the seat must be lowered using a 32° flat cutter.

If the contact area is too low on the valve, the seat must be raised using a 60° interior cutter.

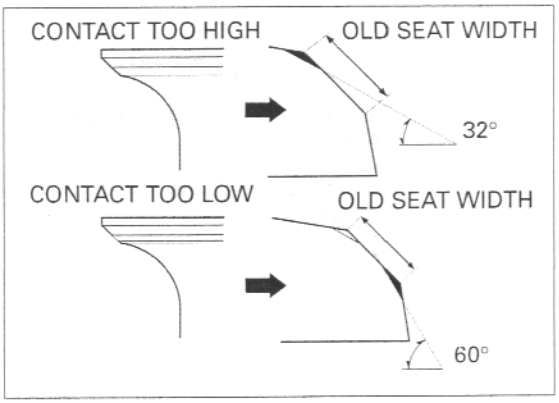

Reface the seat with a 45-degree cutter whenever a valve guide is replaced.

Use a 45° seat cutter to remove any roughness or irregularities from the seat.

TOOLS:

Seat cutter, 29 mm (IN)	**07780-0010300**
Seat cutter, 27.5 mm (EX)	**07780-0010200**
Cutter holder, 4.5 mm	**07781-0010600 or equivalent commercially available in U.S.A.**

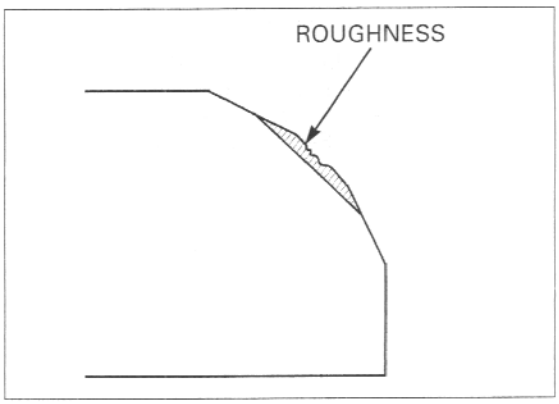

Use a 32° flat cutter to remove the top 1/4 of the existing valve seat material.

TOOLS:

Flat cutter, 30 mm (IN)	**07780-0012200**
Flat cutter, 28 mm (EX)	**07780-0012100**
Cutter holder, 4.5 mm	**07781-0010600 or equivalent commercially available in U.S.A.**

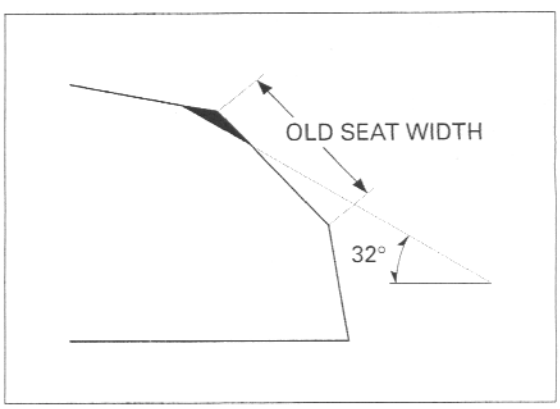

Use a 60° interior cutter to remove the bottom 1/4 of the old seat.

TOOLS:

Interior cutter, 30 mm (IN/EX)	**07780-0014000**
Cutter holder, 4.5 mm	**07781-0010600 or equivalent commercially available in U.S.A.**

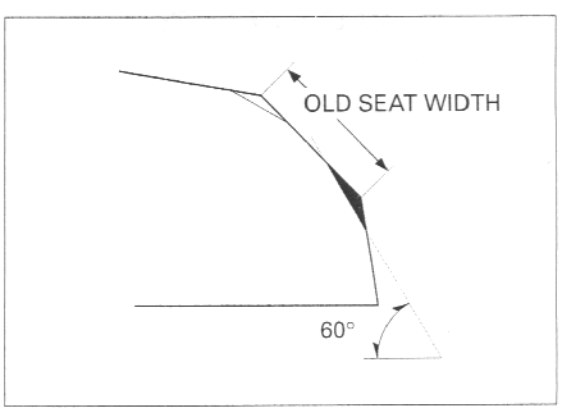

Using a 45° seat cutter, cut the seat to the proper width.
Make sure that all pitting and irregularities are removed.
Refinish if necessary.

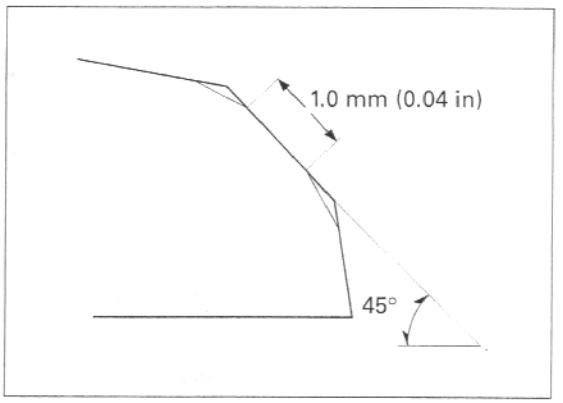

After cutting the seat, apply lapping compound to the valve face, and lap the valve using light pressure.

NOTICE

- *Excessive lapping pressure may deform or damage the seat.*
- *Change the angle of lapping tool frequently to prevent uneven seat wear.*
- *Do not allow lapping compound to enter the guides.*

After lapping, wash all residual compound off the cylinder head and valve.

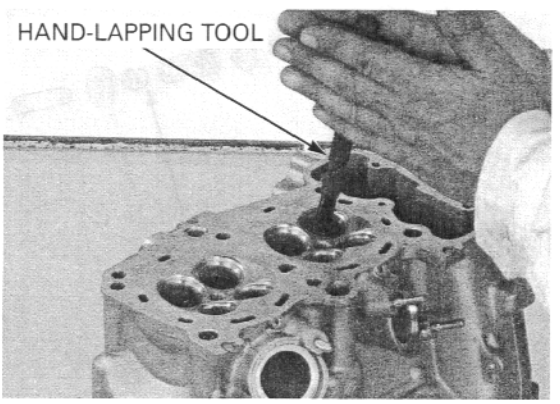

CYLINDER HEAD ASSEMBLY

FRONT CYLINDER HEAD (NORMAL VALVE SIDE):

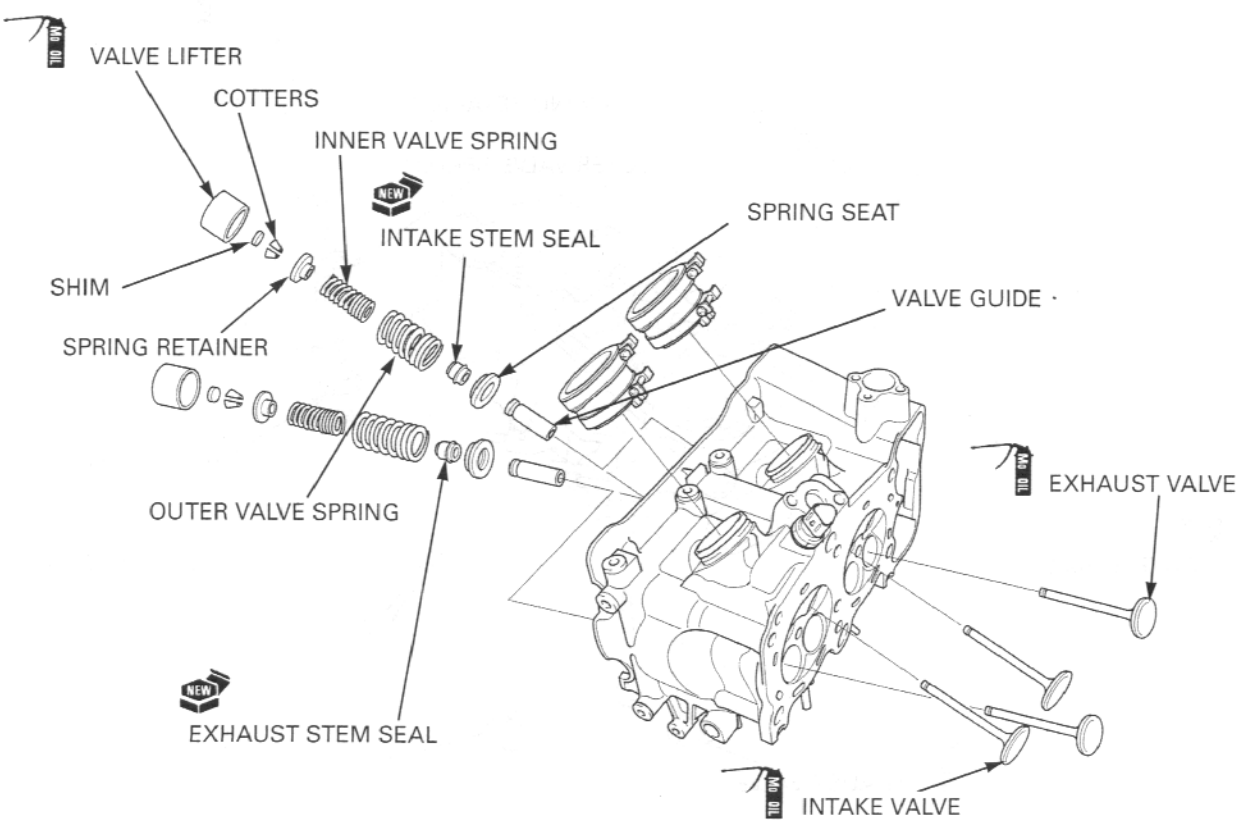

FRONT CYLINDER HEAD (VTEC VALVE SIDE):

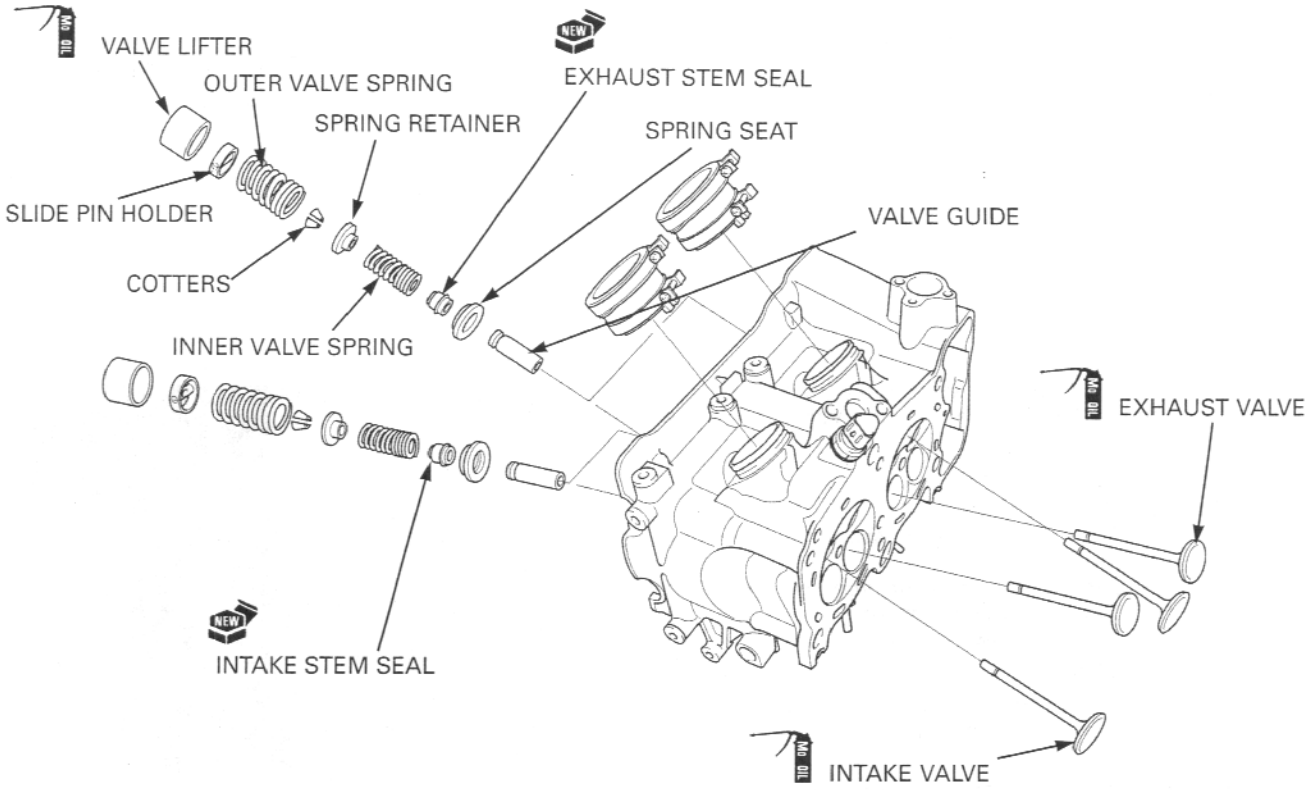

REAR CYLINDER HEAD (NORMAL VALVE SIDE):

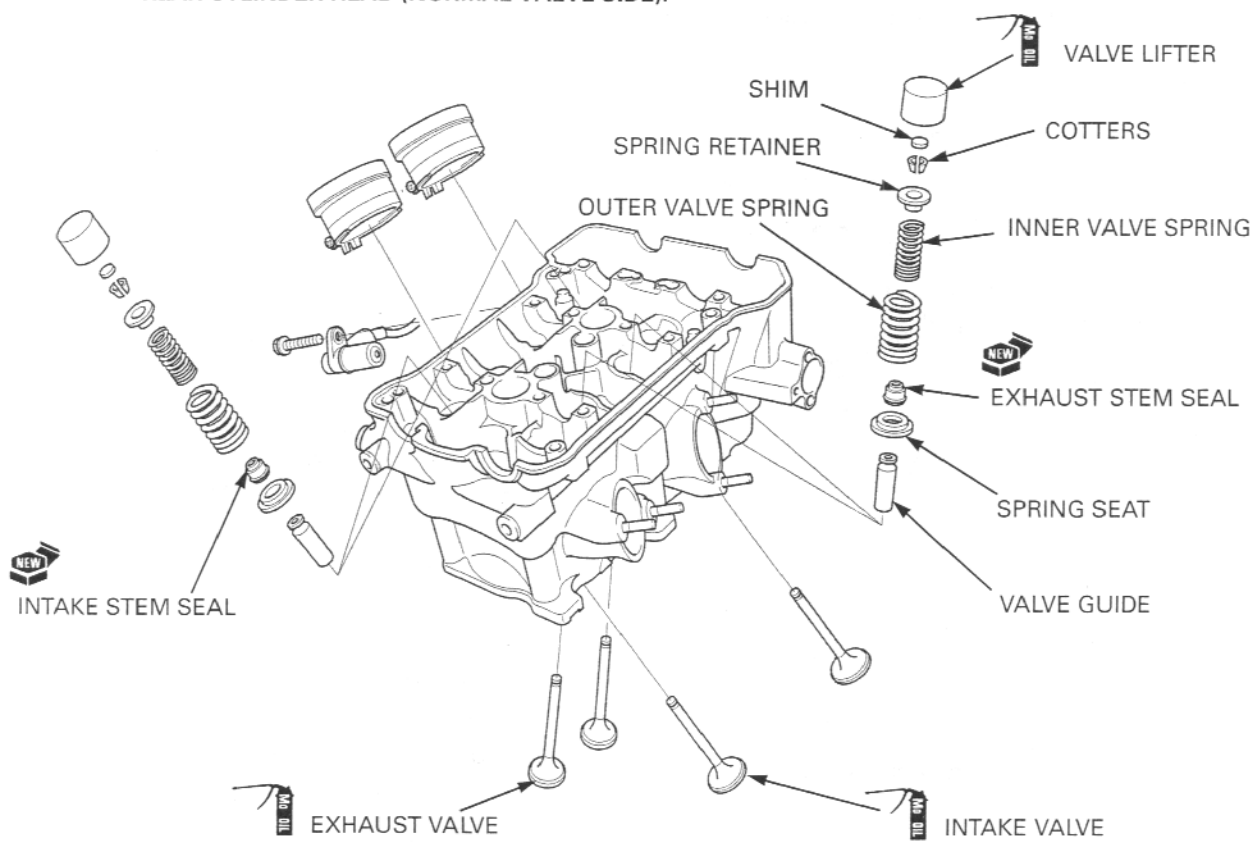

REAR CYLINDER HEAD (VTEC VALVE SIDE):

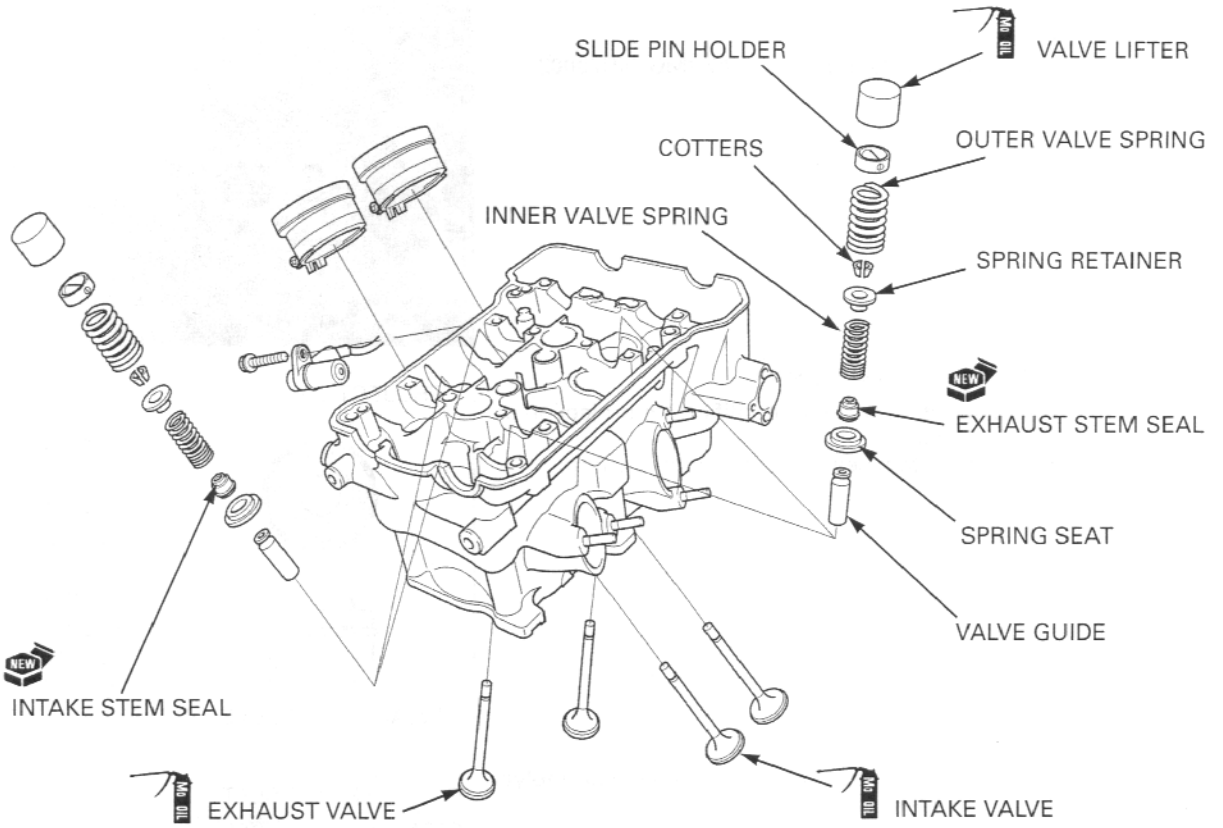

Remove the VTEC oil passage air bleed bolt from the cylinder head.

Blow through all oil passages in the cylinder head with compressed air.

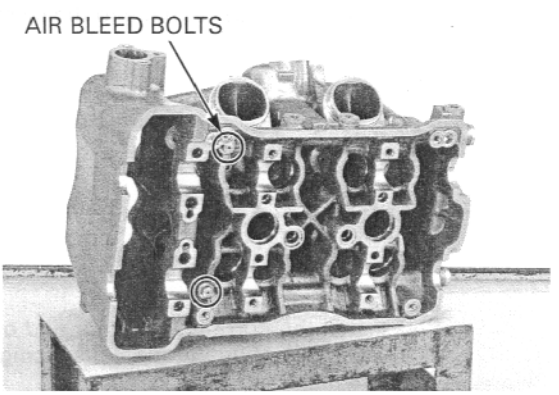

Blow through the air bleed hole in the bleed bolt with compressed air.

Reinstall and tighten the bleed bolts.

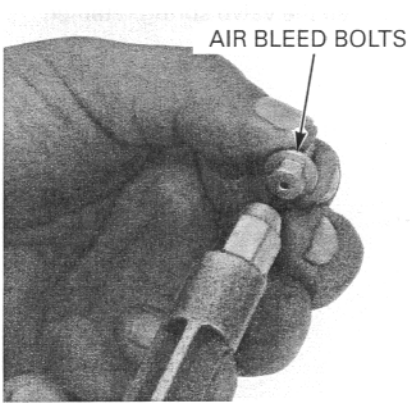

Install the tappet hole protector into the valve lifter bore.

TOOL:
Tappet hole protector **07HMG-MR70002**

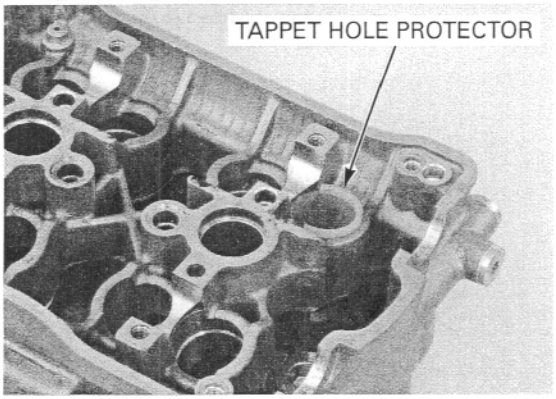

Install the valve spring seats.

The intake stem seal has identification projection on the top surface.
Install each stem seal in their proper position.

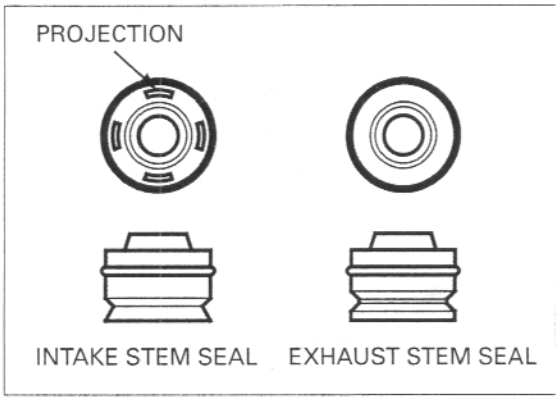

Lubricate the normal side valve stems with molybdenum oil solution.

Insert the valve into the valve guide while turning it slowly to avoid damage to the stem seal.

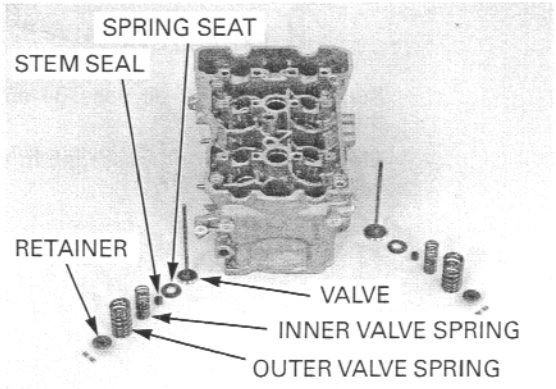

Install the normal side inner and outer valve spring with the tightly wound coils facing the combustion chamber.
Install the valve spring retainer.

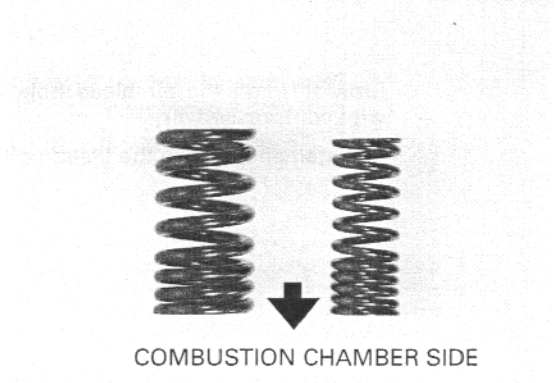

Grease the cotters to ease installation.

Install the valve cotters using the special tool as shown.

NOTICE

To prevent loss of tension, do not compress the valve spring more than necessary.

TOOLS:

Valve spring compressor	**07757-0010000**
Valve spring compressor attachment	**07959-KM30101**

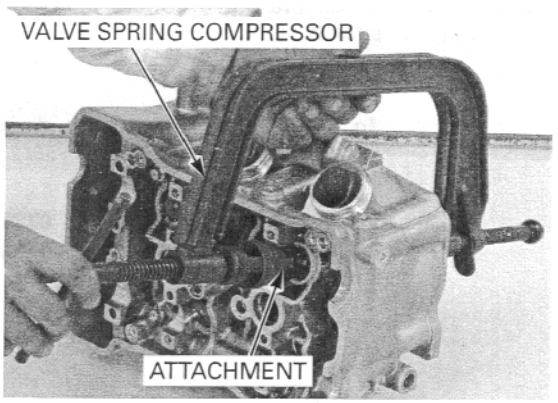

Support the cylinder head above the work bench surface to prevent possible valve damage.

Tap the normal side valve stems gently with two plastic hammers as shown to seat the cotters firmly.

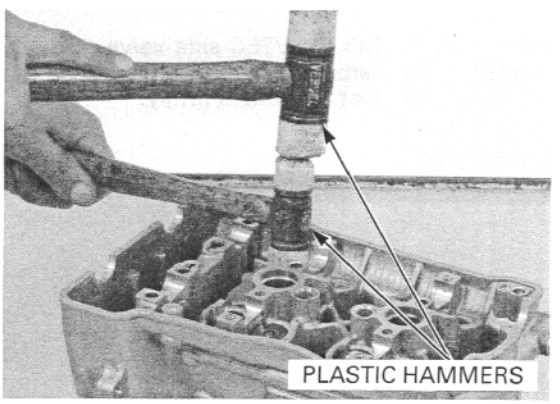

Lubricate the VTEC side valve stems with molybdenum oil solution.

Insert the valve into the valve guide while turning it slowly to avoid damage to the stem seal.

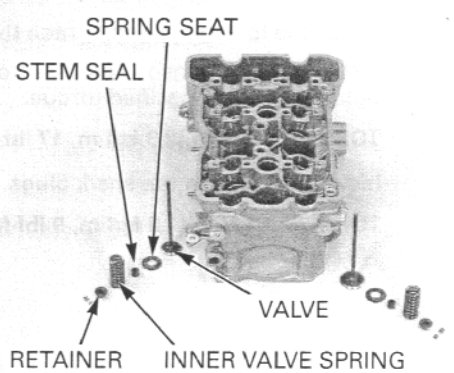

Install the VTEC side inner valve spring with the tightly wound coils facing the combustion chamber. Install the valve spring retainer.

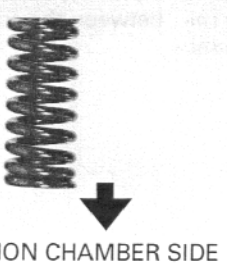

Grease the cotters to ease installation.

Install the valve cotters using the special tool as shown.

NOTICE

To prevent loss of tension, do not compress the valve spring more than necessary.

TOOLS:

Valve spring compressor	**07757-0010000**
Valve spring compressor attachment	**070ME-MCW0100**

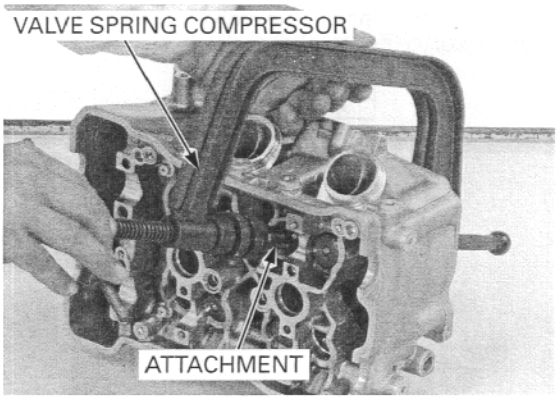

Support the cylinder head above the work bench surface to prevent possible valve damage.

Tap the VTEC side valve stems gently with plastic hammer and suitable collar or socket as shown to seat the cotters firmly.

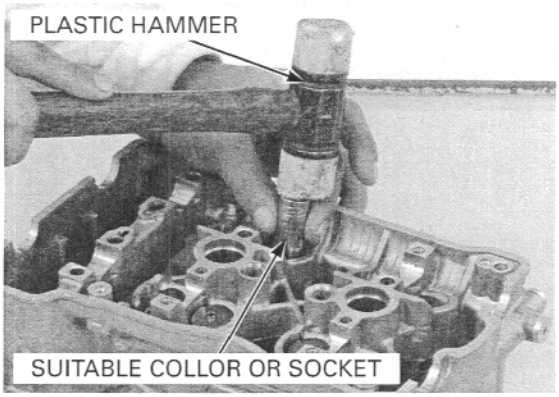

Install the insulators and tighten the band screws.

Install the ECT sensor onto the front cylinder head, tighten it to the specified torque.

TORQUE: 23 N·m (2.3 kgf·m, 17 lbf·ft)

Install and tighten the spark plugs.

TORQUE: 12 N·m (1.2 kgf·m, 9 lbf·ft)

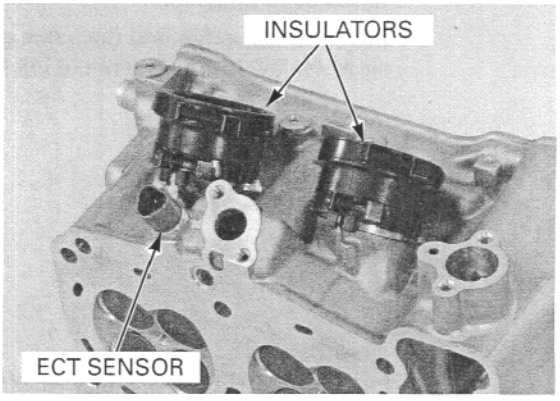

CYLINDER HEAD INSTALLATION

Note the installation direction of the timing sprocket.

Install the timing sprocket by aligning the wide teeth between the crankshaft and sprocket.

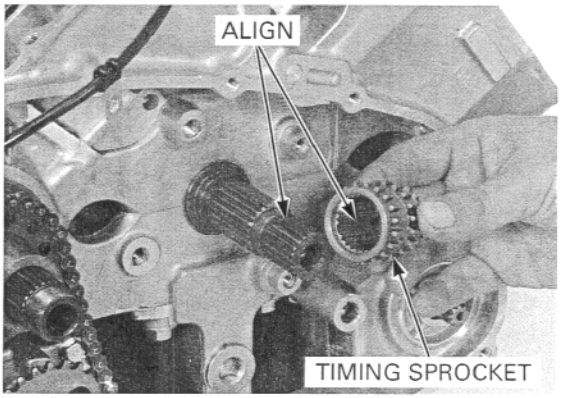

Install the rear cam chain onto the timing sprocket.

Install the rear cam chain guide and bolt.
Install the rear cam chain tensioner collar, tensioner and bolt.

Tighten the cam chain guide and cam chain tensioner flange bolts to the specified torque.

TORQUE:
Cam chain tensioner flange bolt:
26 N·m (2.7 kgf·m, 20 lbf·ft)
Cam chain guide flange bolt:
12 N·m (1.2 kgf·m, 9 lbf·ft)

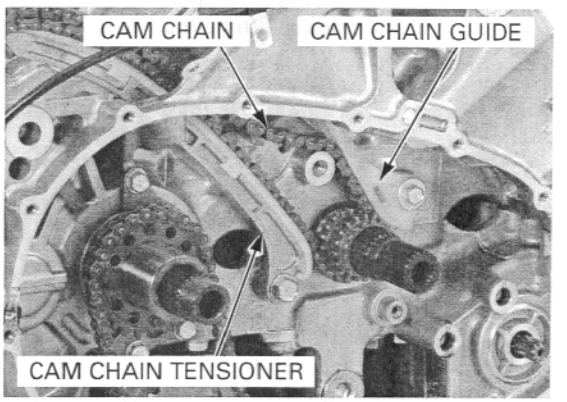

Install the front cam chain onto the timing sprocket.

Install the front cam chain guide and bolt.
Install the front cam chain tensioner collar, tensioner and bolt.

Tighten the cam chain guide and cam chain tensioner flange bolts to the specified torque.

TORQUE:
Cam chain tensioner flange bolt:
26 N·m (2.7 kgf·m, 20 lbf·ft)
Cam chain guide flange bolt:
12 N·m (1.2 kgf·m, 9 lbf·ft)

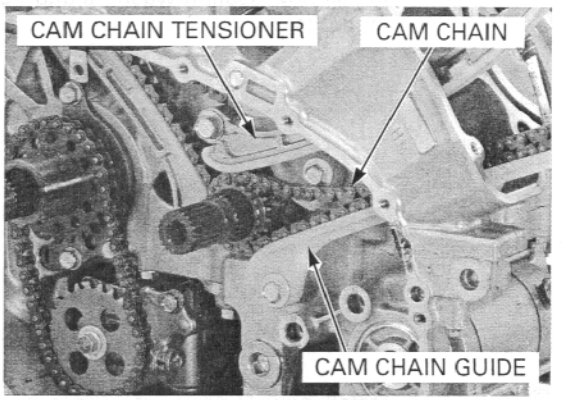

The cylinder head gasket has an identification mark. At installation, install each gasket in their proper position.

Install the gasket and dowel pins.

Install the oil through collar and new O-ring.

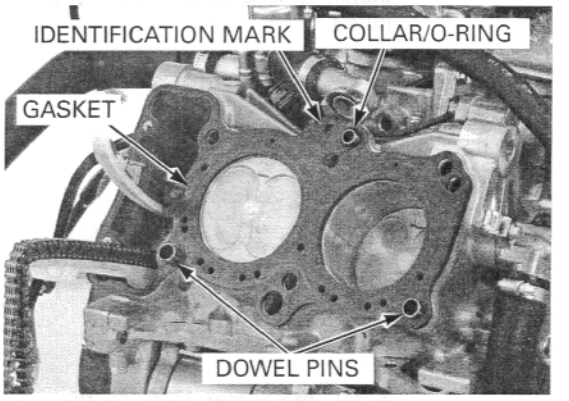

Install the cylinder head onto the cylinder block.

Apply oil to the threads and seating surface of the 9 mm bolts/washers and install them.

Install the two 6 mm flange bolts.

Tighten the 9 mm bolts in a crisscross pattern in 2 – 3 steps to the specified torque.

TORQUE: 44 N·m (4.5 kgf·m, 33 lbf·ft)

Tighten the 6 mm flange bolts.

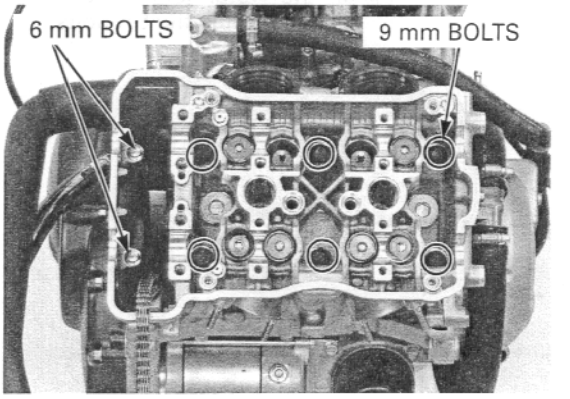

Install the cam chain tensioner lifter onto the cylinder head with new gasket.

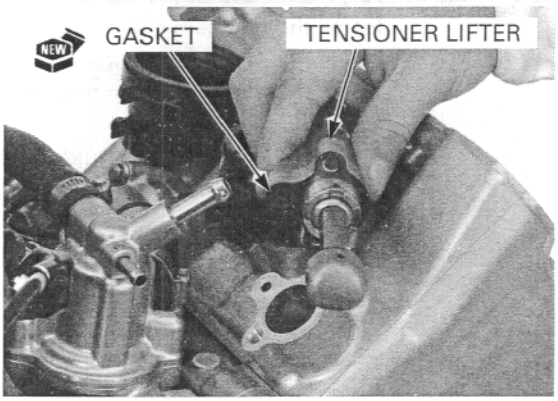

Install new sealing washers and tighten the mounting bolts.

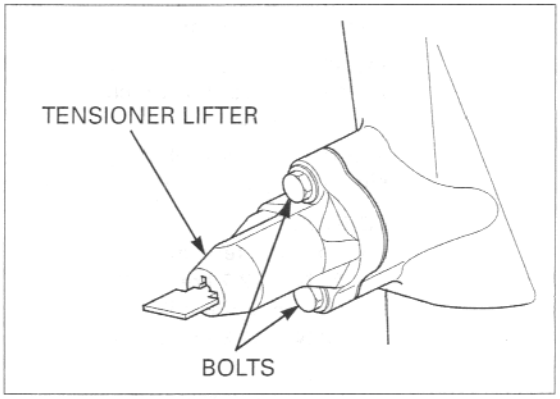

Install new O-rings into the grooves of the water joints.

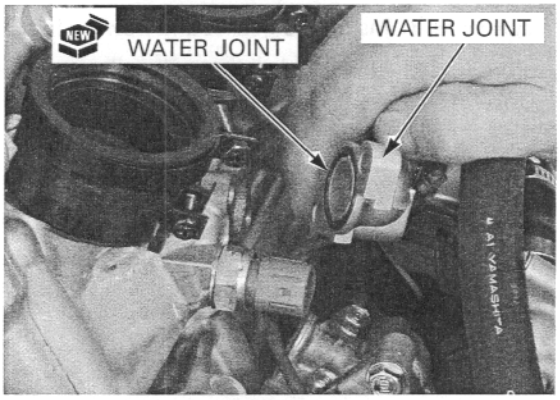

install the water joint to the cylinder head, then install and tighten the SH bolts.

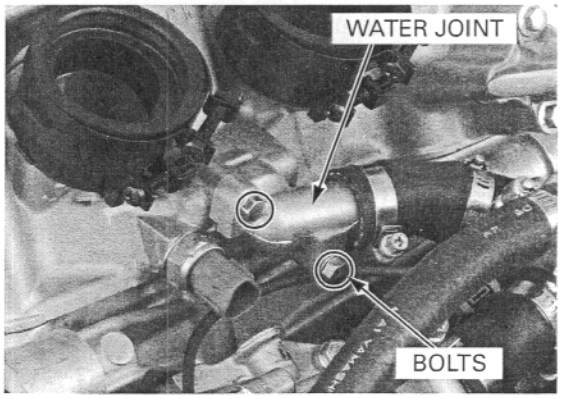

For the front cylinder head, connect the ECT sensor connector.

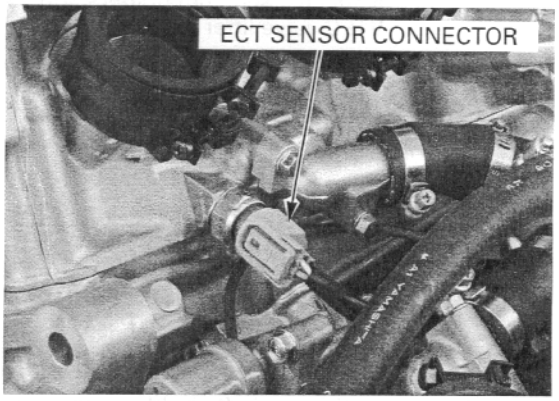

For the rear cylinder head, apply oil to the new O-ring and install it into the groove of the cam pulse generator.

Install the cam pulse generator, tighten the bolt.

Install the engine into the frame (page 7-10).

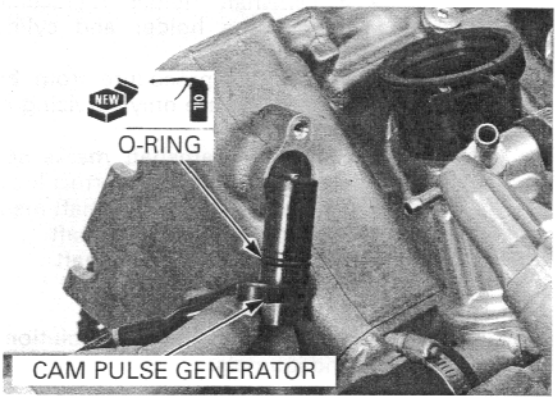

FRONT CAMSHAFT INSTALLATION

Install the shims and valve lifters into the normal valve lifter bore.

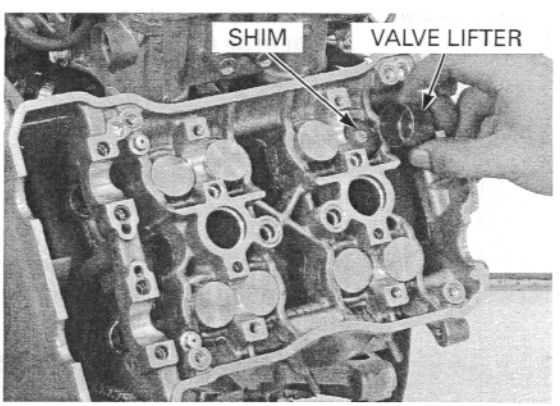

Install the VTEC side outer valve springs into the VTEC valve lifter bore with the tightly wound coils facing the combustion chamber.



Install the slide pin holders and valve lifters into the VTEC valve lifter bore.

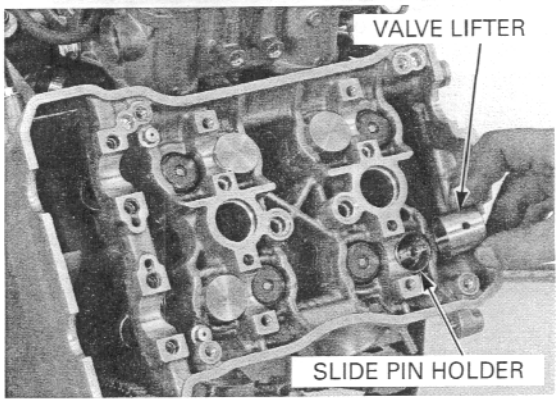

- If camshaft holder replacement is required, replace the holder and cylinder head as an assembly.
- Follow this procedure from beginning to end, even if you are only servicing one cylinder head camshafts.
- Check the camshaft marks so that you install each camshaft in its correct location.
- The marks on the camshaft mean the following:
  FR: Front cylinder camshaft
  RR: Rear cylinder camshaft
  IN: Intake camshaft
  EX: Exhaust camshaft
- Apply molybdenum oil solution to the cam lobes and journals.

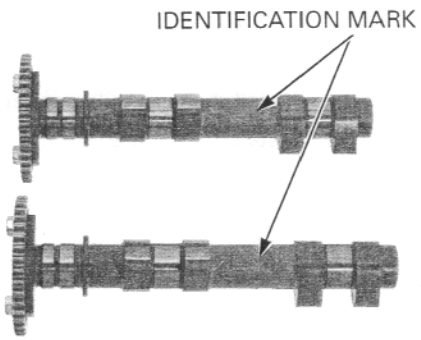

- Check the camshaft holder marks as noted during removal, so that you install each camshaft holder in its correct location.

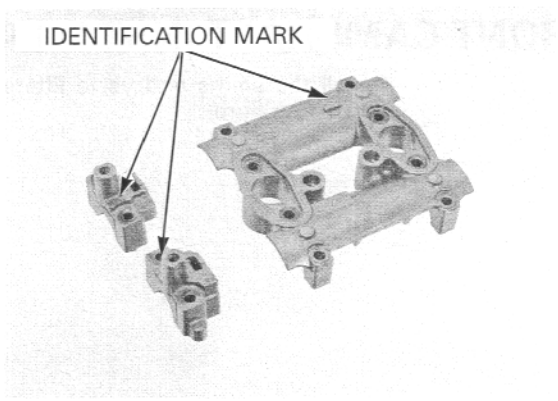

WHEN BOTH THE FRONT AND REAR CAMSHAFTS WERE REMOVED:

Turn the crankshaft clockwise and align the "3T" mark on the ignition pulse generator rotor with the index mark on the right crankcase cover.
Make sure that the No.3 piston is at TDC (Top Dead Center) on the compression stroke.

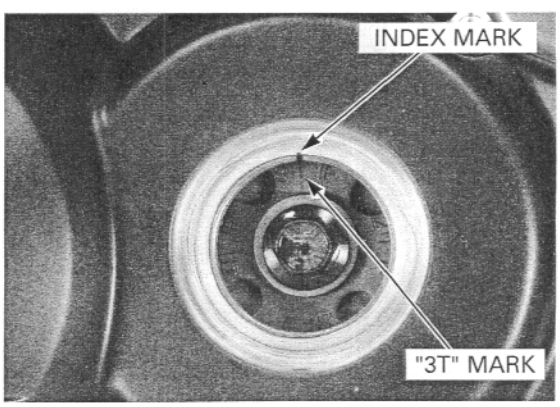

Apply molybdenum oil solution to the camshaft journals of the cylinder head and camshaft holder.

Install the rear cylinder intake and exhaust camshafts (page 8-42).

REAR:

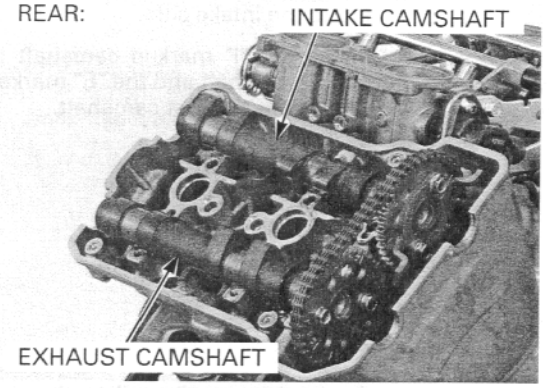

Turn the crankshaft clockwise 1-1/4 turn (450°) and align the "4T" mark on the ignition pulse generator rotor with the index mark on the right crankcase cover.
Make sure that the No.4 piston is at TDC (Top Dead Center) on the compression stroke.

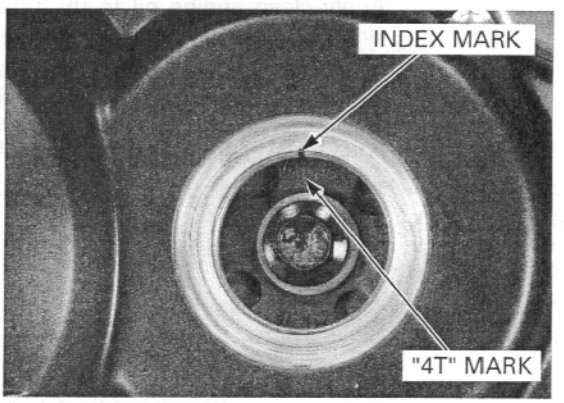

Apply molybdenum oil solution to the camshaft journals of the cylinder head and camshaft holder.

Make sure the index lines on the cam sprockets are facing outward and are flush with the cylinder head.

Install the front cylinder intake and exhaust camshafts with the index lines on the cam sprocket facing outward.

Install the cam chain onto the cam sprockets.

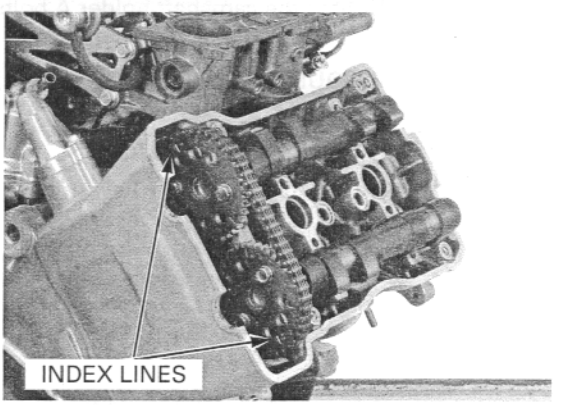

Always replace the O-rings with new ones.

Install the joint collars and new O-rings into the cylinder head.

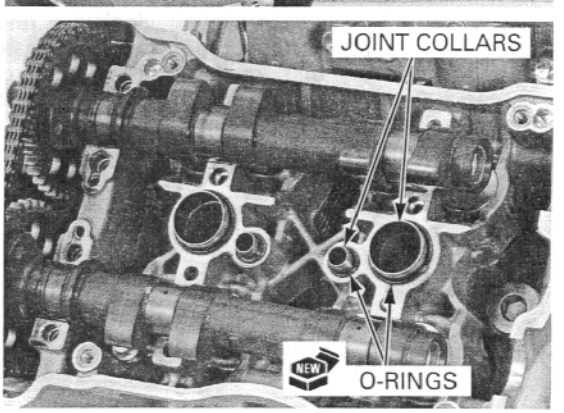

Install the camshaft holder A with the "IN" mark facing to the intake side.

Install the camshaft holder B with their bosses facing the holder A.

Install the "I" marked camshaft holder B onto the intake camshaft and the "E" marked camshaft holder B onto the exhaust camshaft.

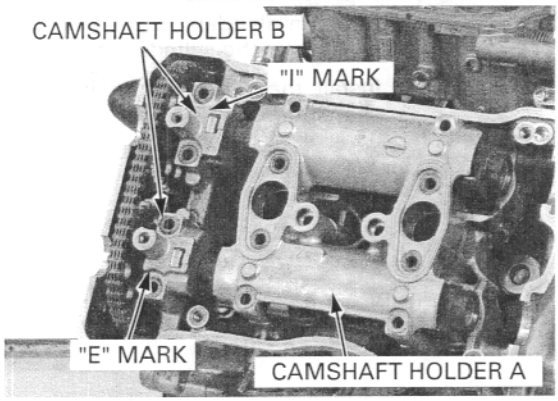

Apply clean engine oil to the threads and seating surfaces of the camshaft holder flange bolts.

Install new sealing washers and flange bolts.
Tighten the camshaft holder A flange bolts in a crisscross pattern in two or more steps until the holder rests lightly on the cylinder head surface.

Tighten the camshaft holder bolts, starting with the bolts at the dowel pins, in two or more steps.

Tighten the camshaft holder B flange bolts gradually in two or more steps.

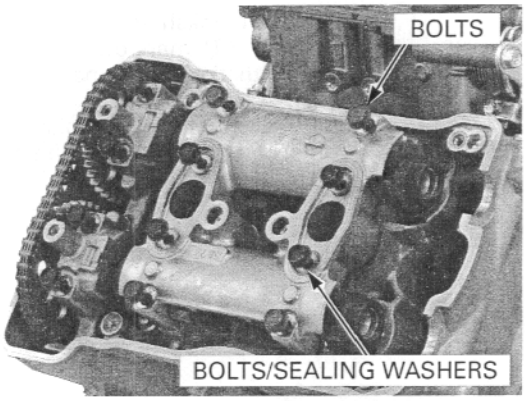

Tighten the camshaft holder bolts in a crisscross pattern in 2 or 3 steps.

Tighten the camshaft holder A bolts to the specified torque, then the camshaft holder B bolts.

TORQUE: 12 N·m (1.2 kgf·m, 9 lbf·ft)

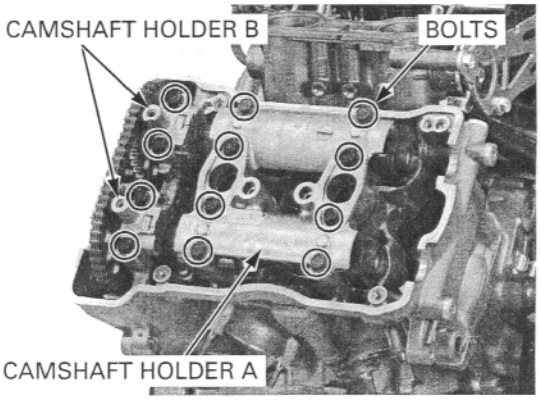

Turn the crankshaft clockwise and align the "3T" mark on the ignition pulse generator rotor with the index mark on the right crankcase cover.
Make sure that the No.3 piston is at TDC (Top Dead Center) on the compression stroke.

Recheck the rear cylinder valve timing.

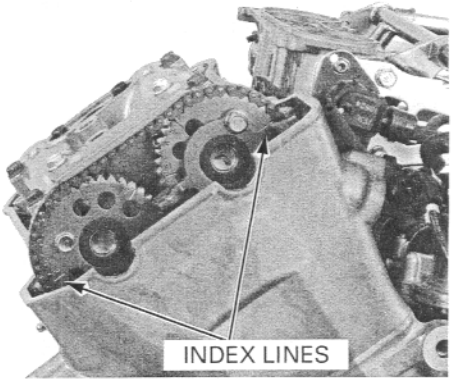

With the No.3 cylinder is at TDC, make sure the front cylinder cam sprocket "△△" marks are facing outward and flush with the top surface of the cylinder head.

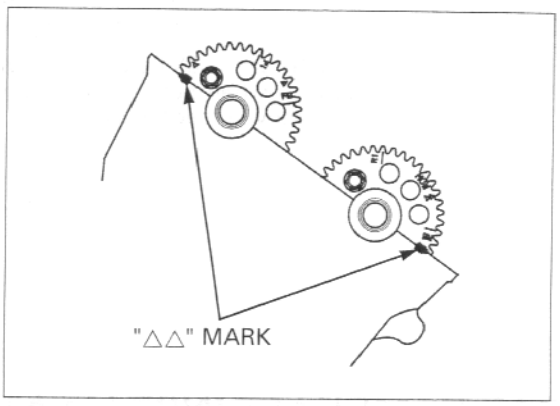

IF ONLY THE FRONT CYLINDER CAMSHAFT WAS REMOVED:

Remove the rear cylinder head cover (page 8-6).

Turn the crankshaft clockwise and align the "3T" mark on the ignition pulse generator rotor with the index mark on the right crankcase cover.

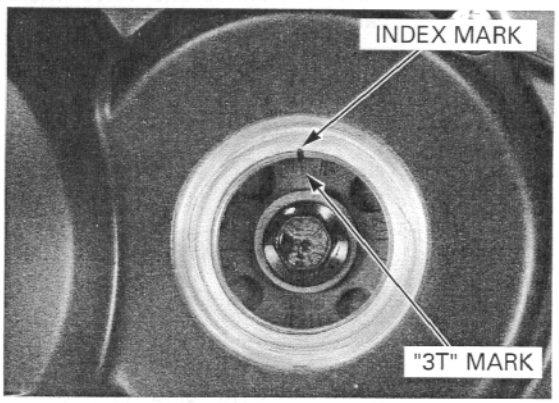

Make sure that the index lines on the rear cam sprockets are facing outward.
If they are not, turn the crankshaft clockwise one full turn (360°) and realign the "3T" mark with the index mark.

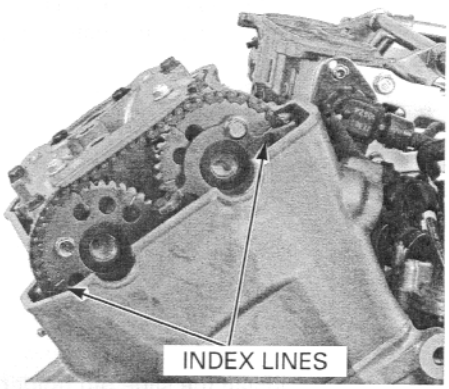

Turn the crankshaft clockwise 1-1/4 turn (450°) and align the "4T" mark on the ignition pulse generator rotor with the index mark on the right crankcase cover.

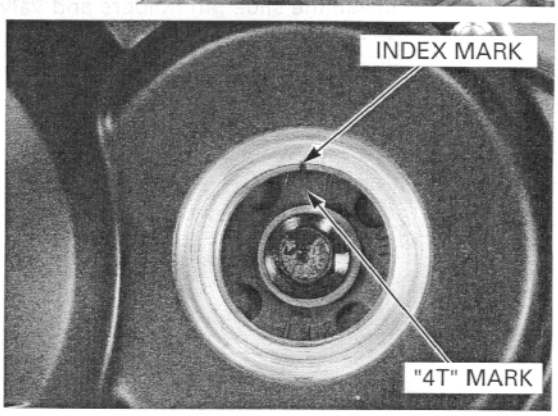

Install the front cylinder camshafts with the index lines on the cam sprocket facing outward.

Install the camshaft holders following the same procedure as when both the front and rear camshafts were removed (page 8-38).

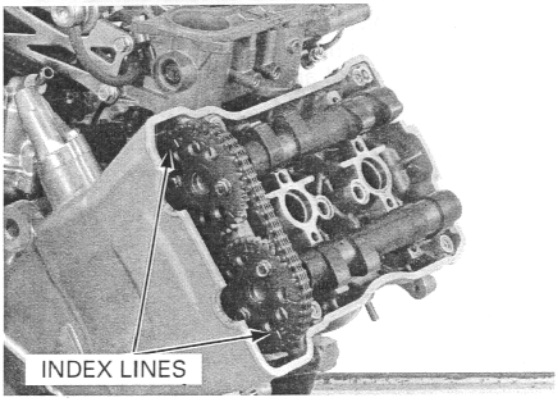

REAR CAMSHAFT INSTALLATION

Install the shims and valve lifters into the normal valve lifter bore.

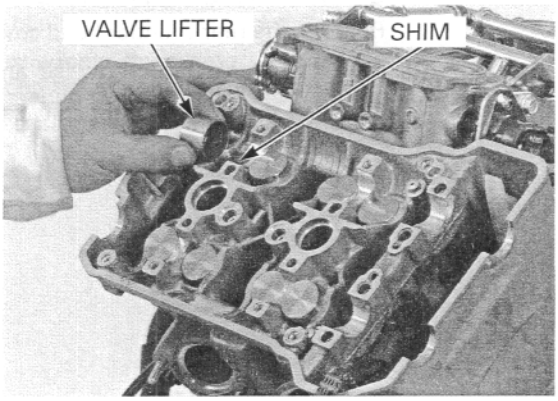

Install the VTEC side outer valve springs into the VTEC valve lifter bore with the tightly wound coils facing the combustion chamber.

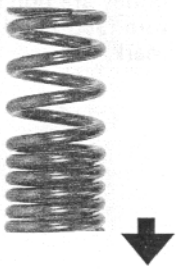

Install the slide pin holders and valve lifters into the VTEC valve lifter bore.

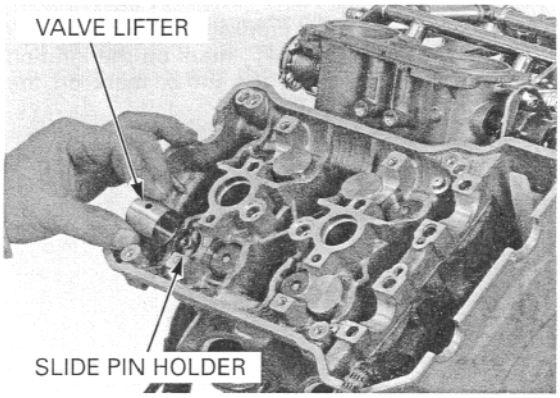

- If camshaft holder replacement is required, replace the holder and cylinder head as an assembly.
- Follow this procedure from beginning to end, even if you are only servicing one cylinder head camshafts.
- Check the camshaft marks so that you install each camshaft in its correct location.
- The marks on the camshaft mean the following:
  FR: Front cylinder camshaft
  RR: Rear cylinder camshaft
  IN: Intake camshaft
  EX: Exhaust camshaft
- Apply molybdenum oil solution to the cam lobes and journals.

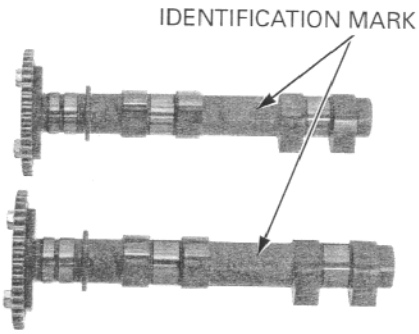

- Check the camshaft holder marks as noted during removal, so that you install each camshaft holder in its correct location.

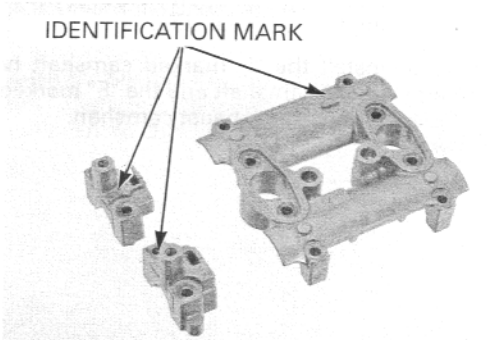

WHEN BOTH THE FRONT AND REAR CAMSHAFTS WERE REMOVED:

Turn the crankshaft clockwise and align the "3T" mark on the ignition pulse generator rotor with the index mark on the right crankcase cover.
Make sure that the No.3 piston is at TDC (Top Dead Center) on the compression stroke.

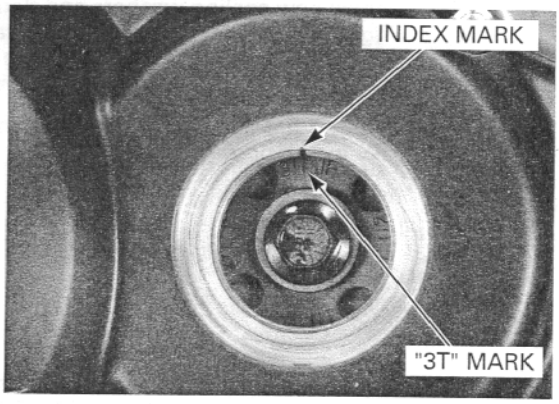

Apply molybdenum oil solution to the camshaft journals of the cylinder head and camshaft holder.

Install the rear cylinder intake and exhaust camshafts with the index lines on the cam sprocket facing outward.

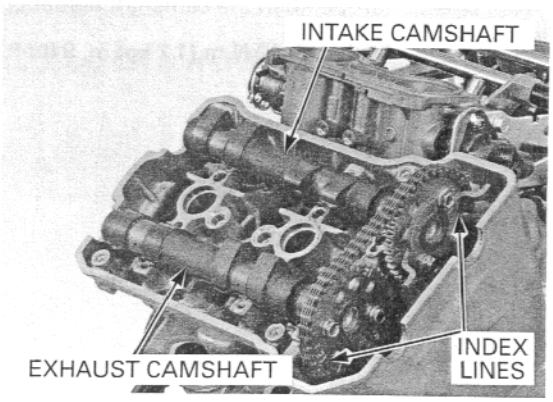

Always replace the O-rings with new ones.

Install the joint collars and new O-rings into the cylinder head.

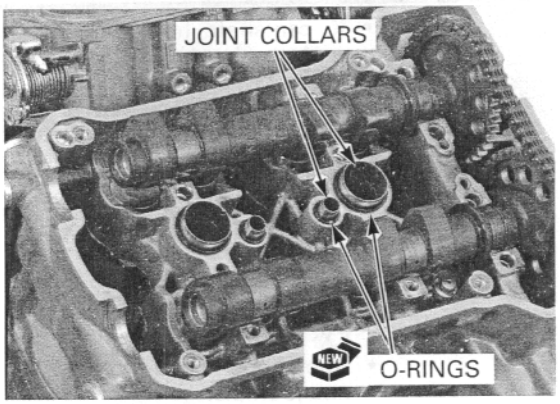

Install the camshaft holder A with the "IN" mark facing to the intake side.

Install the camshaft holder B with their bosses facing the holder A.

Install the "I" marked camshaft holder B onto the intake camshaft and the "E" marked camshaft holder B onto the exhaust camshaft.

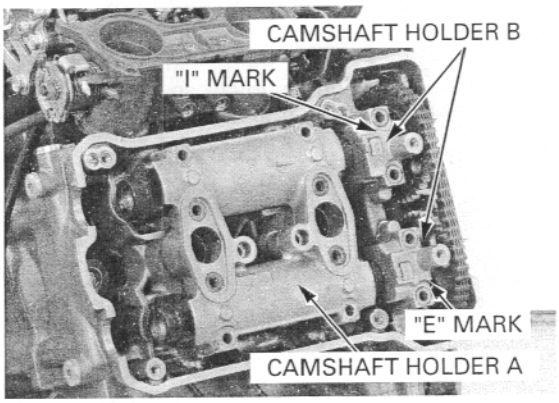

Apply clean engine oil to the threads and seating surfaces of the camshaft holder flange bolts.

Install new sealing washers and flange bolts. Tighten the camshaft holder A flange bolts in a crisscross pattern in two or more steps until the holder rests lightly on the cylinder head surface.

Tighten the camshaft holder bolts, starting with the bolts at the dowel pins, in two or more steps.

Tighten the camshaft holder B flange bolts gradually in two or more steps.

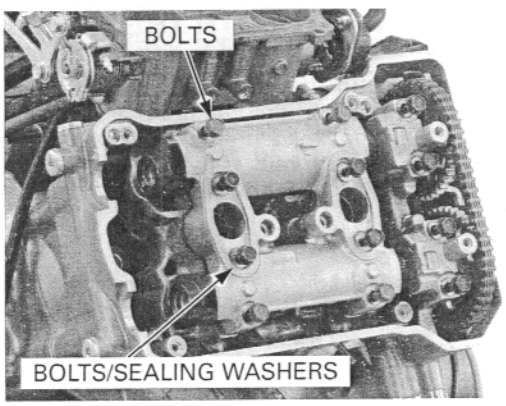

Tighten the camshaft holder bolts in a crisscross pattern in 2 or 3 steps.

Tighten the camshaft holder A bolts to the specified torque, then the camshaft holder B bolts.

TORQUE: 12 N·m (1.2 kgf·m, 9 lbf·ft)

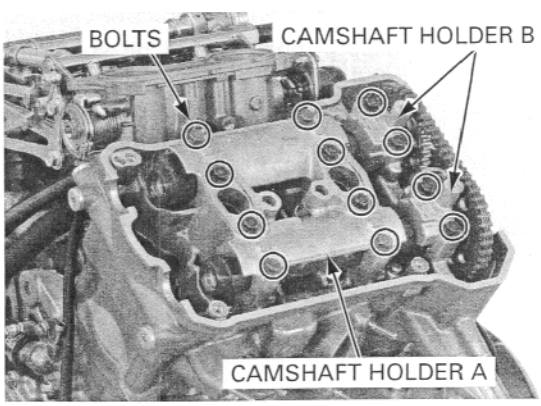

Turn the crankshaft clockwise 1-1/4 turn (450°) and align the "4T" mark on the ignition pulse generator rotor with the index mark on the right crankcase cover.
Make sure the No.4 piston is at TDC (Top Dead Center) on the compression stroke.

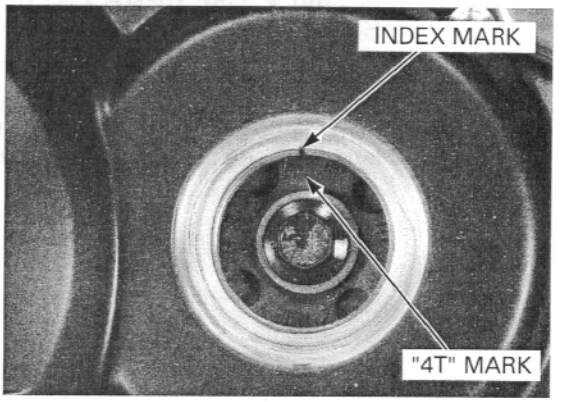

Apply molybdenum oil solution to the camshaft journals of the cylinder head and camshaft holder.

Make sure the index lines on the cam sprockets are facing outward and are flush with the cylinder head.

Install the front cylinder intake and exhaust camshafts with the index lines on the cam sprocket facing outward.

Install the front cylinder head camshaft holders following the same procedure as for the rear (page 8-42).

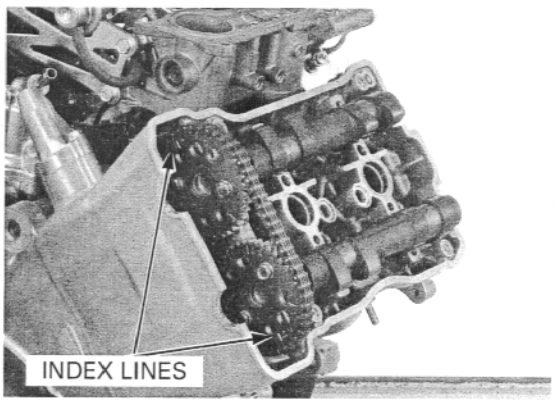

Turn the crankshaft clockwise and align the "4T" mark on the ignition pulse generator rotor with the index mark on the right crankcase cover.
Make sure the No.4 piston is at TDC (Top Dead Center) on the compression stroke.

Recheck the front cylinder valve timing.

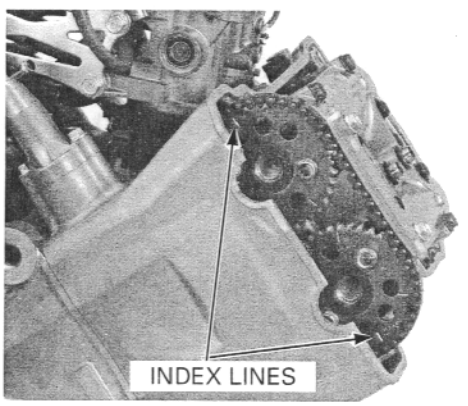

With the No.4 cylinder is at TDC, make sure the rear cylinder cam sprocket "△" marks are facing outward and flush with the top surface of the cylinder head.

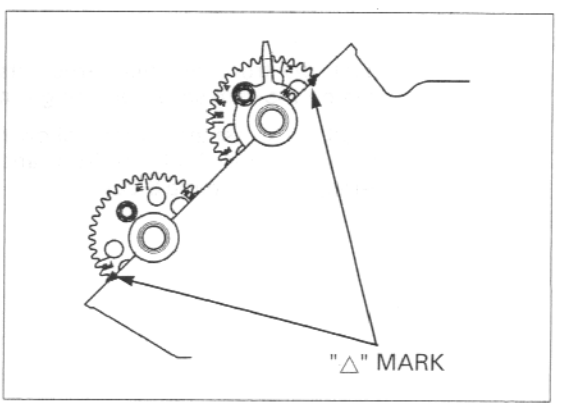

IF ONLY THE REAR CYLINDER CAMSHAFT WAS REMOVED:

Remove the front cylinder head cover (page 8-6).

Turn the crankshaft clockwise and align the "4T" mark on the ignition pulse generator rotor with the index mark on the right crankcase cover.

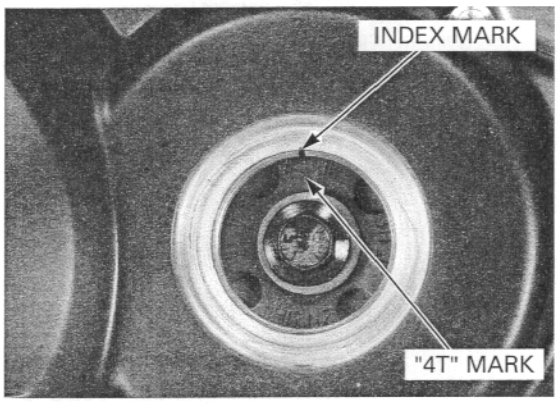

Make sure the index lines on the front cam sprockets are facing outward.
If they are not, turn the crankshaft clockwise one full turn (360°) and realign the "4T" mark with the index mark.

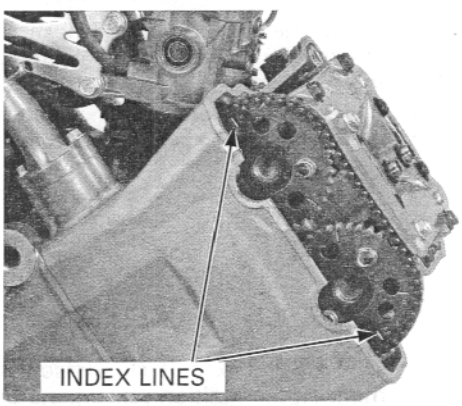

Turn the crankshaft clockwise 3/4 turn (270°) and align the "3T" mark on the ignition pulse generator rotor with the index mark on the right crankcase cover.

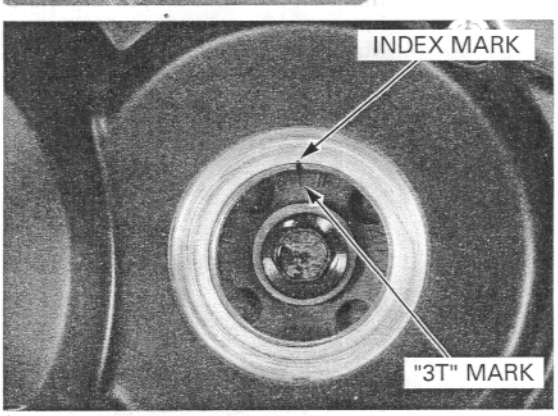

Install the front cylinder camshafts with the index lines on the cam sprocket facing outward.

Install the camshaft holders following the same procedure as when both the front and rear camshafts were removed (page 8-38).

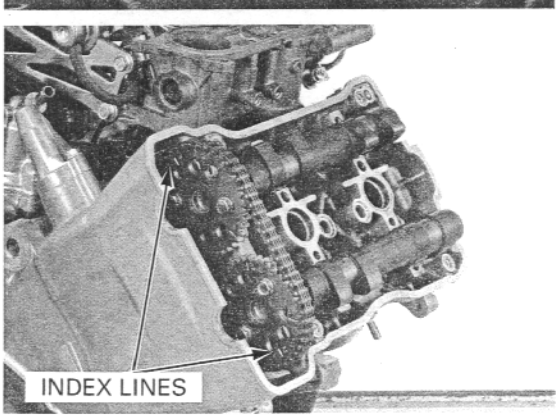

IF ONLY THE FRONT CYLINDER CAMSHAFT WAS REMOVED:

Remove the rear cylinder head cover (page 8-6).

Turn the crankshaft clockwise and align the "3T" mark on the ignition pulse generator rotor with the index mark on the right crankcase cover.

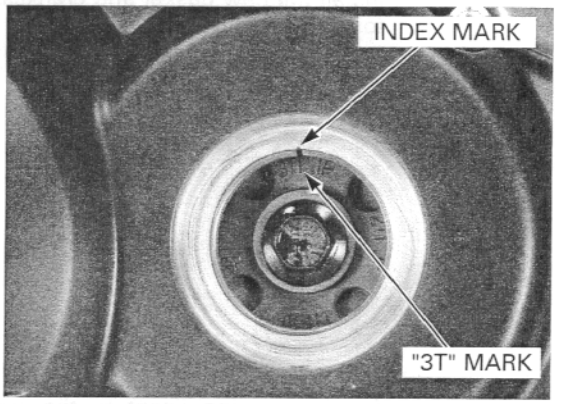

Make sure the index lines on the rear cam sprockets are facing outward.

If they are not, turn the crankshaft clockwise one full turn (360°) and realign the "3T" mark with the index mark.

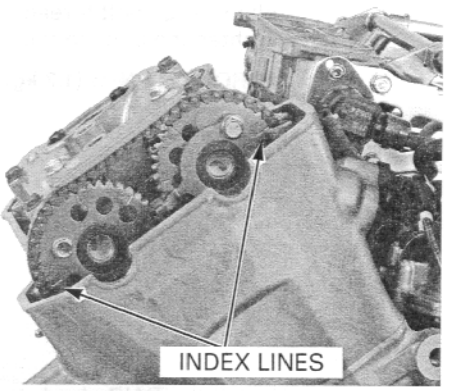

Turn the crankshaft clockwise 1-1/4 turn (450°) and align the "4T" mark on the ignition pulse generator rotor with the index mark on the right crankcase cover.

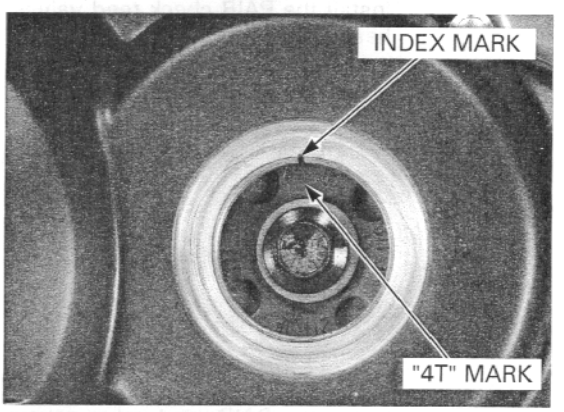

Install the front cylinder camshafts with the index lines on the cam sprocket facing outward.

Install the camshaft holders following the same procedure as when both the front and rear camshafts were removed (page 8-38).

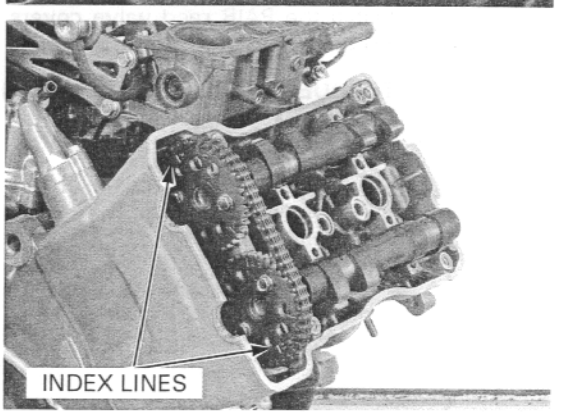

CYLINDER HEAD COVER ASSEMBLY

Install the new gasket and crankcase breather plate to the rear cylinder head cover.

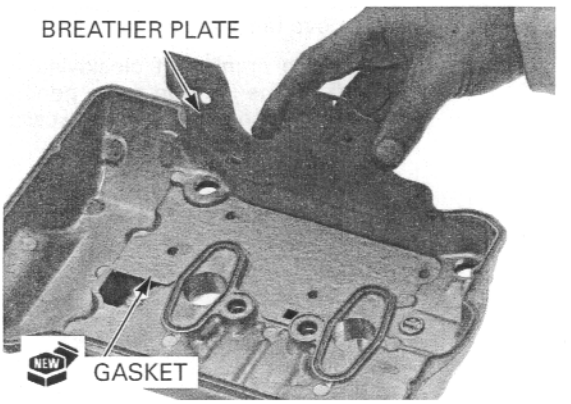

Apply a locking agent to the crankcase breather plate flange bolt threads.
Tighten the bolts to the specified torque.

TORQUE: 12 N·m (1.2 kgf·m, 9 lbf·ft)

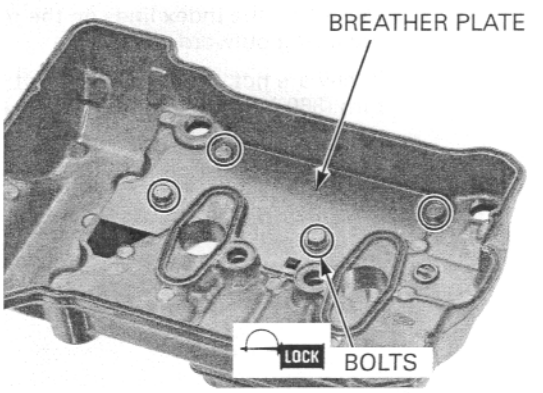

Install the PAIR check reed valves into the cylinder head cover.

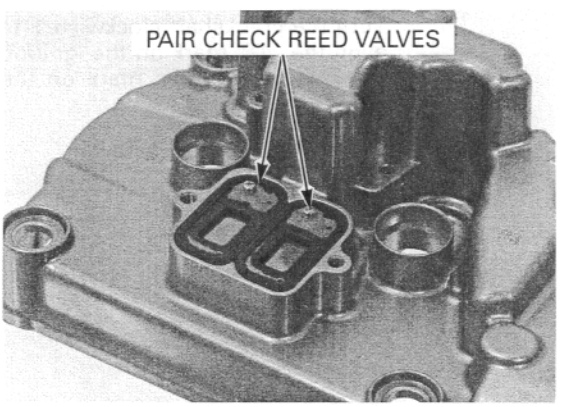

Install the PAIR reed valve covers and tighten the SH bolts to the specified torque.

TORQUE: 12 N·m (1.2 kgf·m, 9 lbf·ft)

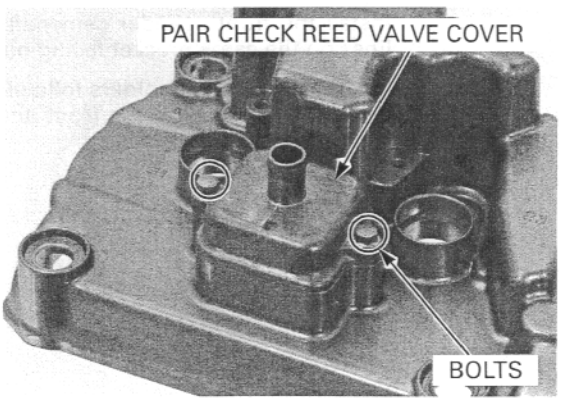

CYLINDER HEAD COVER INSTALLATION

Install the cylinder head packing into the groove of the cylinder head cover.

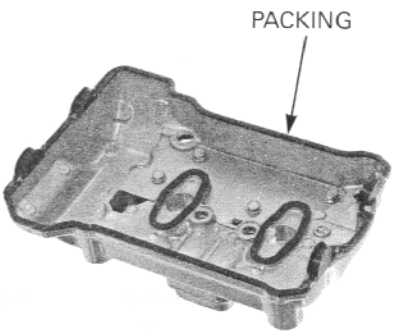

Apply sealant to the cylinder head semi-circular cut-outs as shown.

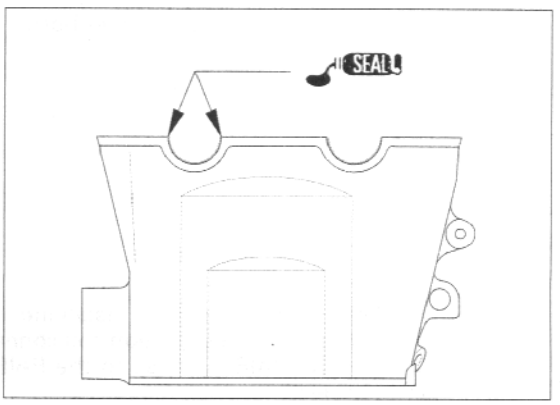

Install the air joint collars and new O-rings.

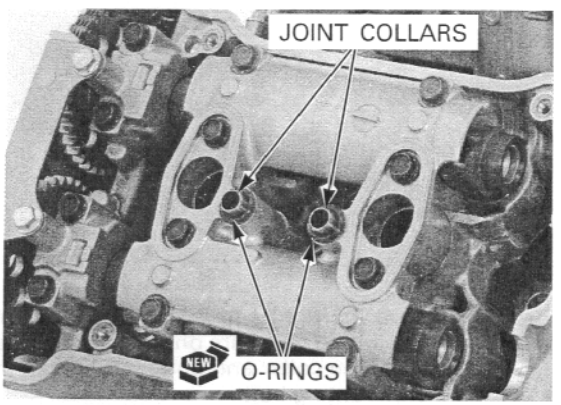

Install the cylinder head cover onto the cylinder head.

Install the mounting rubbers with their "UP" mark facing up.

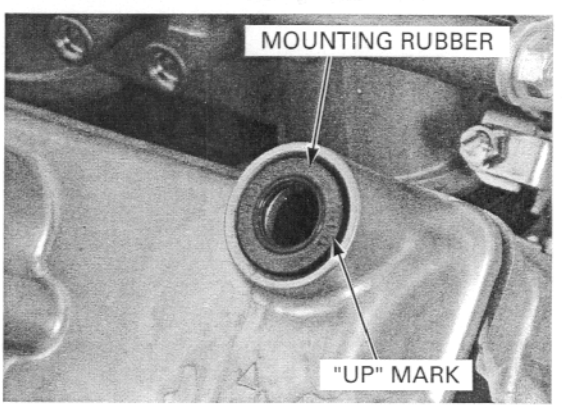

Tighten the "△" marked bolts first.

Install and tighten the cylinder head cover special bolts to the specified torque.

TORQUE: 10 N·m (1.0 kgf·m, 7 lbf·ft)

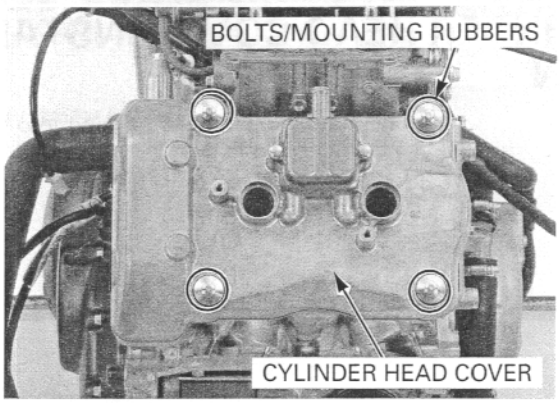

For the rear cylinder head, install the direct ignition coil/spark plug caps.

Connect the PAIR air hose to the PAIR check reed valve cover.
Connect the crankcase breather hose.

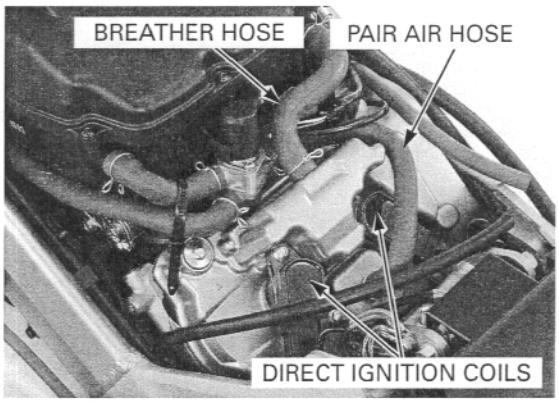

For the front cylinder head, install the direct ignition coils and connect the ignition coil connector.
Connect the PAIR air hose to the PAIR check reed valve covers.

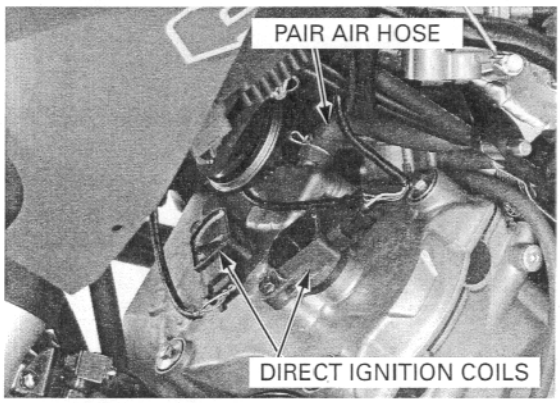

Move the right and left radiator assembly upward, install both radiators onto the frame boss.
Install the collar and bolt, and tighten the left radiator mounting bolt.

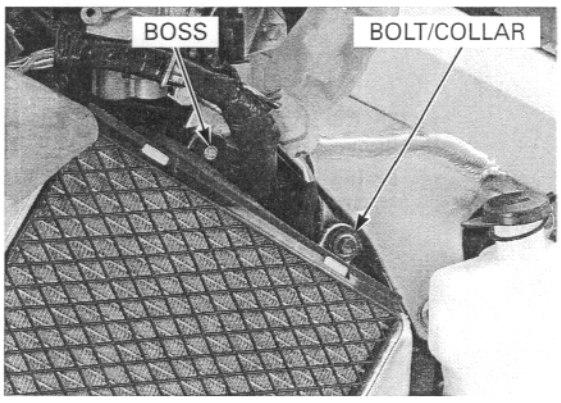

Install the collar and bolt, and tighten the right radiator mounting bolt.

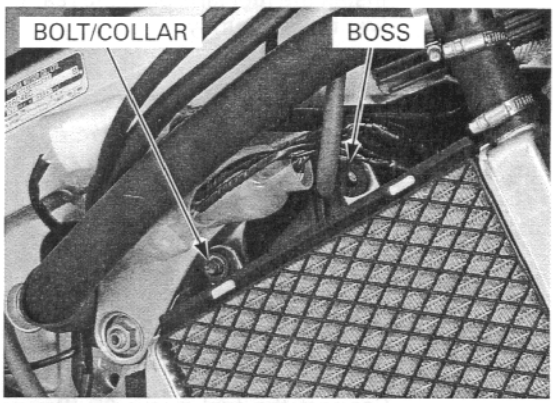

Install the oil cooler pipe stay and tighten the bolt on each side.

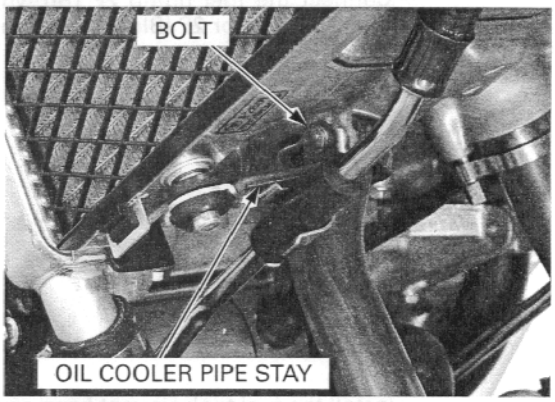

Connect the radiator sub-harness 2P (Black) connector.

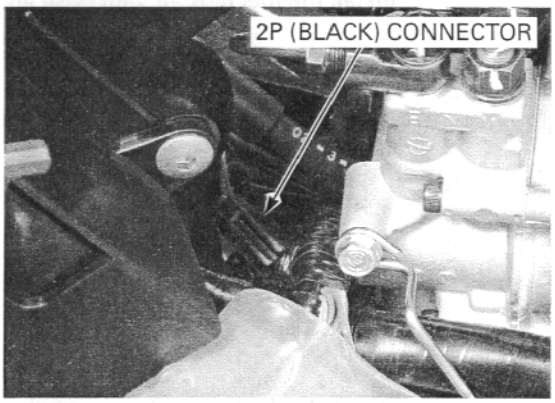

Install the oil cooler onto the bracket, tighten the mounting bolts.

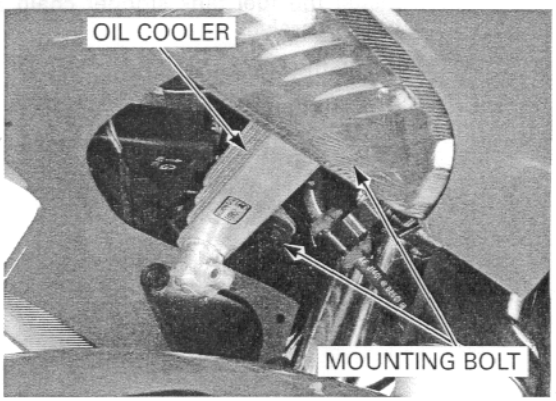

Install the fuel tank onto the rear bracket, tighten the two bolts securely.

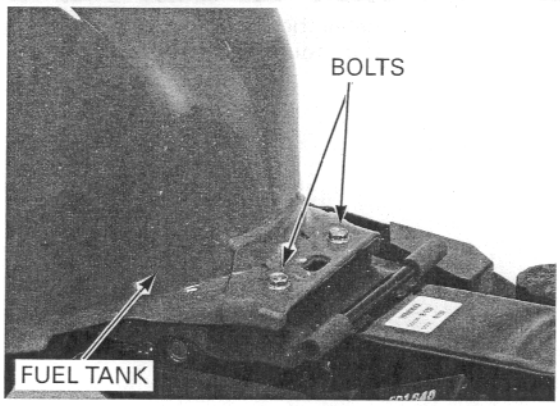

Connect the fuel pump 2P (Brown) connector and fuel level sensor 2P (Blue) connector.

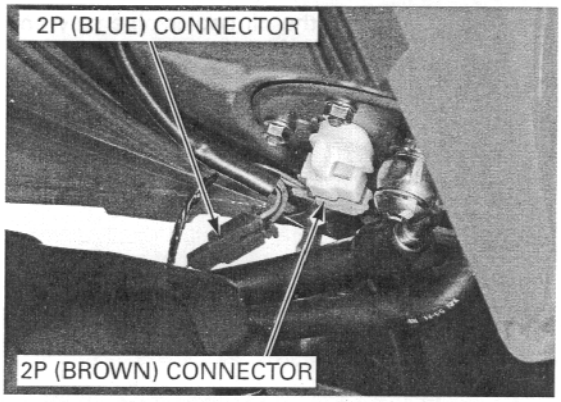

Install the fuel tank air vent hose and overflow hose.

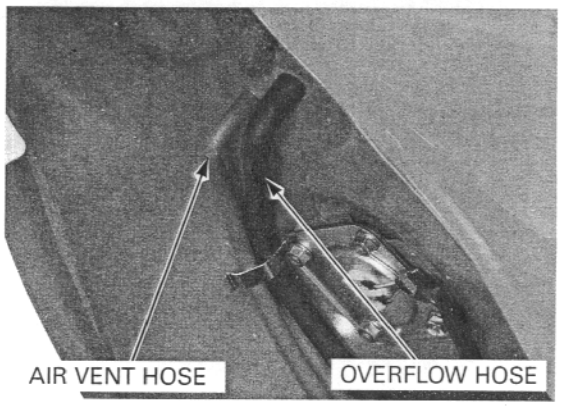

Install the fuel tank stopper chain and tighten the bolt securely.

Install the following:

- Throttle body (page 5-67)
- Air cleaner housing (page 5-61)
- Side cowl (page 2-10)
- Fuel tank (page 5-58)

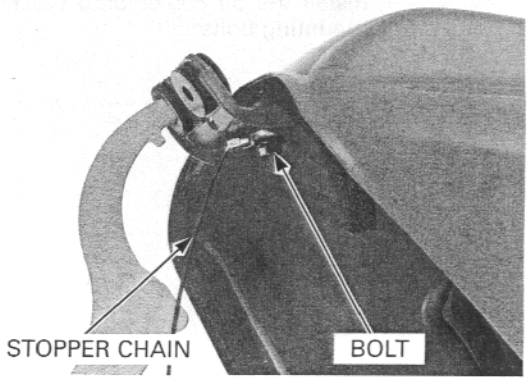

CAM CHAIN TENSIONER LIFTER

REMOVAL

For the front cam chain tensioner lifter removal, remove the throttle body (page 5-63).

For the rear cam chain tensioner lifter removal, remove the muffler heat guard plate.

Remove the cam chain tensioner sealing bolt and sealing washer.

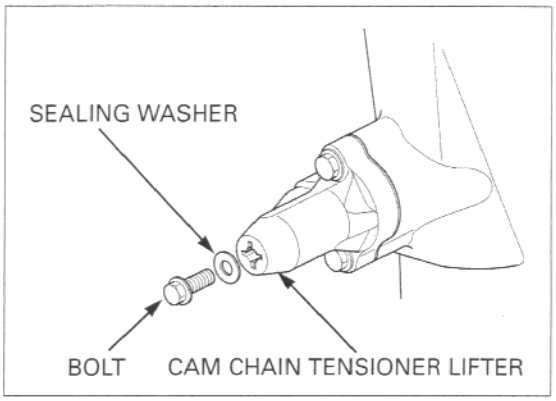

Turn the tensioner shaft fully in (clockwise) and secure it using the stopper tool (page 8-12) to prevent damaging the cam chain.

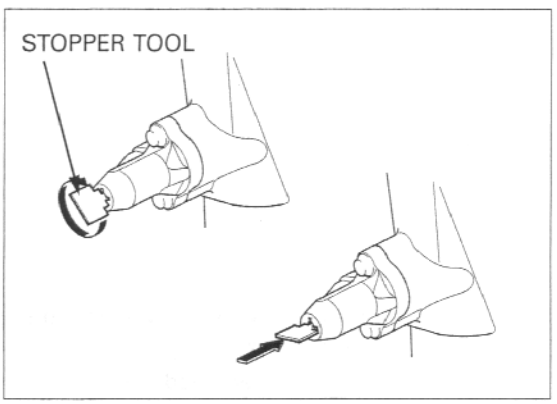

Be careful not to allow dust and dirt to enter the cylinder head.

Remove the bolts and cam chain tensioner lifter.
Remove the gasket.

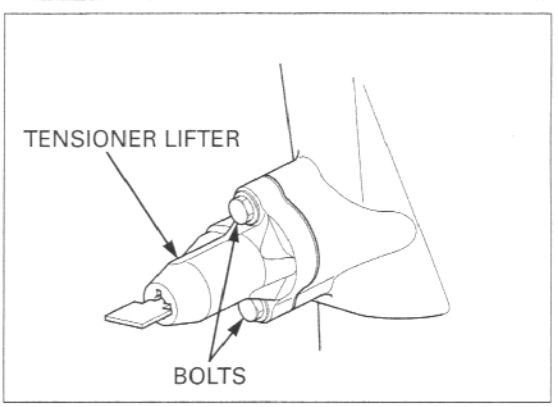

INSTALLATION

Install a new gasket onto the cam chain tensioner lifter.

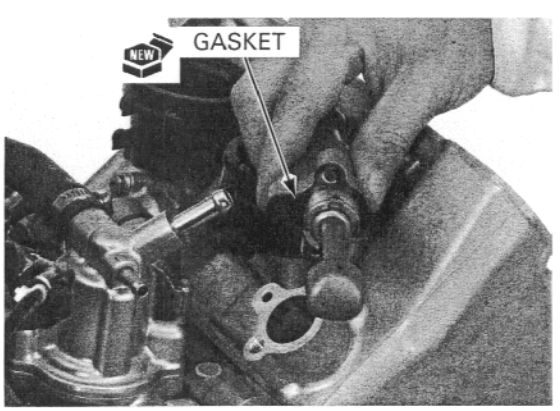

Install the cam chain tensioner lifter into the cylinder head.
Install and tighten the mounting bolts.

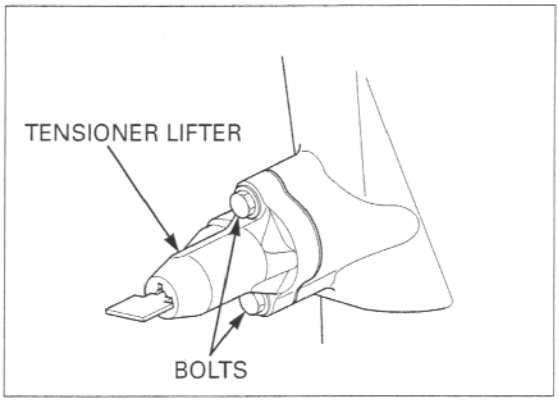

Remove the stopper tool.

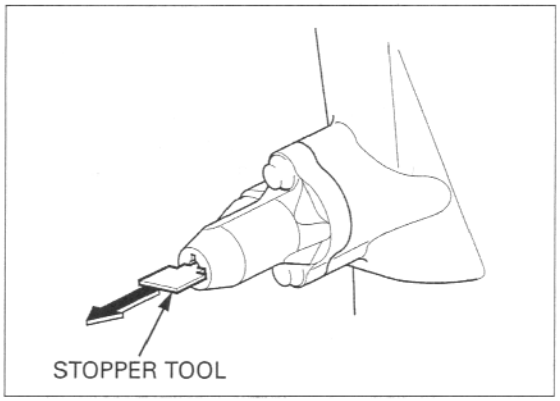

Install a new sealing washer and tighten the sealing bolt securely.

Install the removed parts in the reverse order of removal.

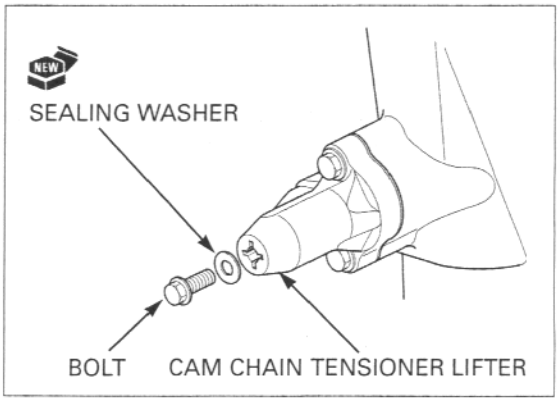

9. CLUTCH

COMPONENT LOCATION 9-2

SERVICE INFORMATION 9-4

TROUBLESHOOTING 9-5

CLUTCH FLUID REPLACEMENT/AIR BLEEDING 9-6

CLUTCH MASTER CYLINDER 9-7

CLUTCH SLAVE CYLINDER 9-11

RIGHT CRANKCASE COVER REMOVAL 9-14

CLUTCH 9-15

PRIMARY DRIVE GEAR 9-23

RIGHT CRANKCASE COVER INSTALLATION 9-25

COMPONENT LOCATION

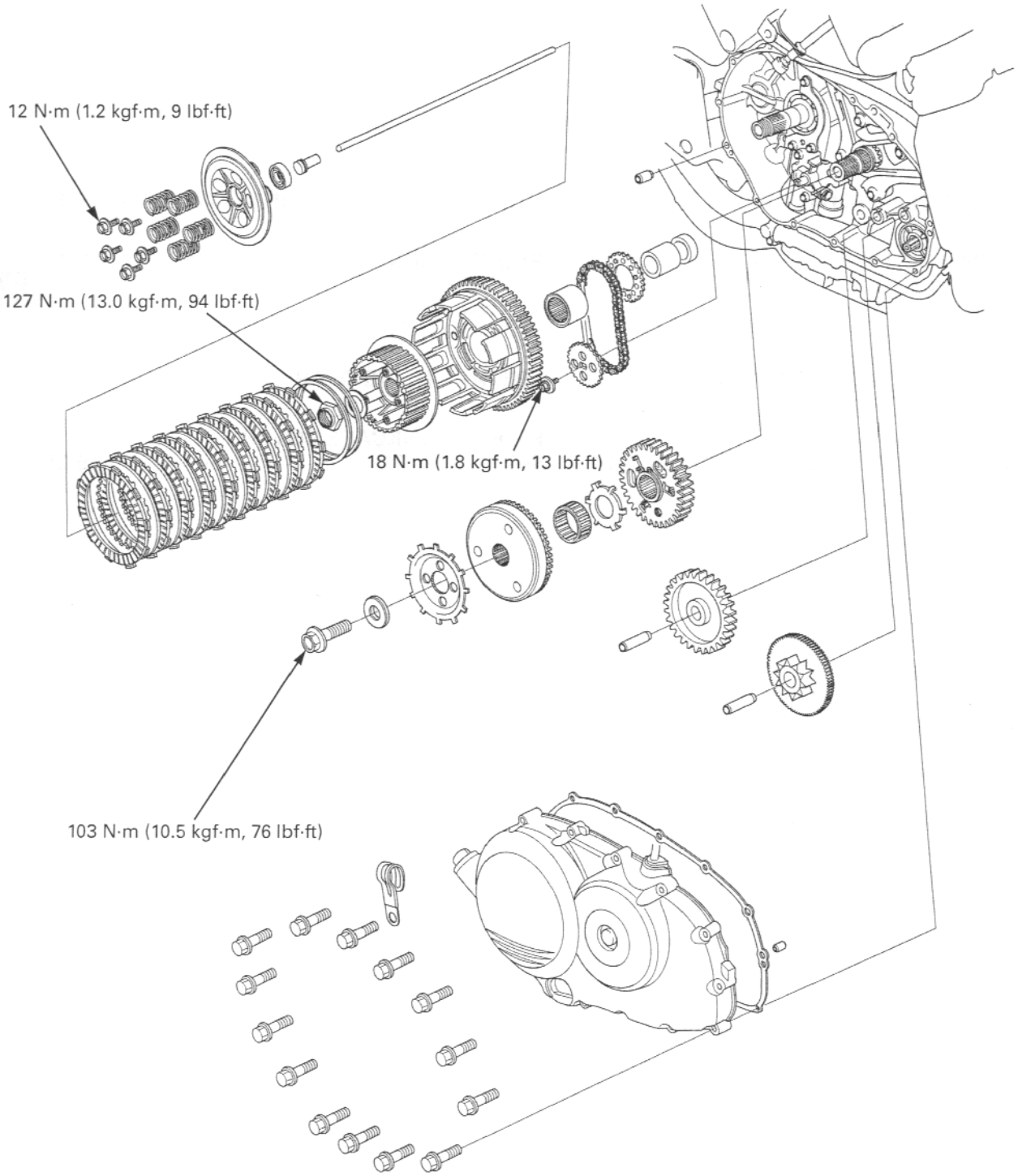

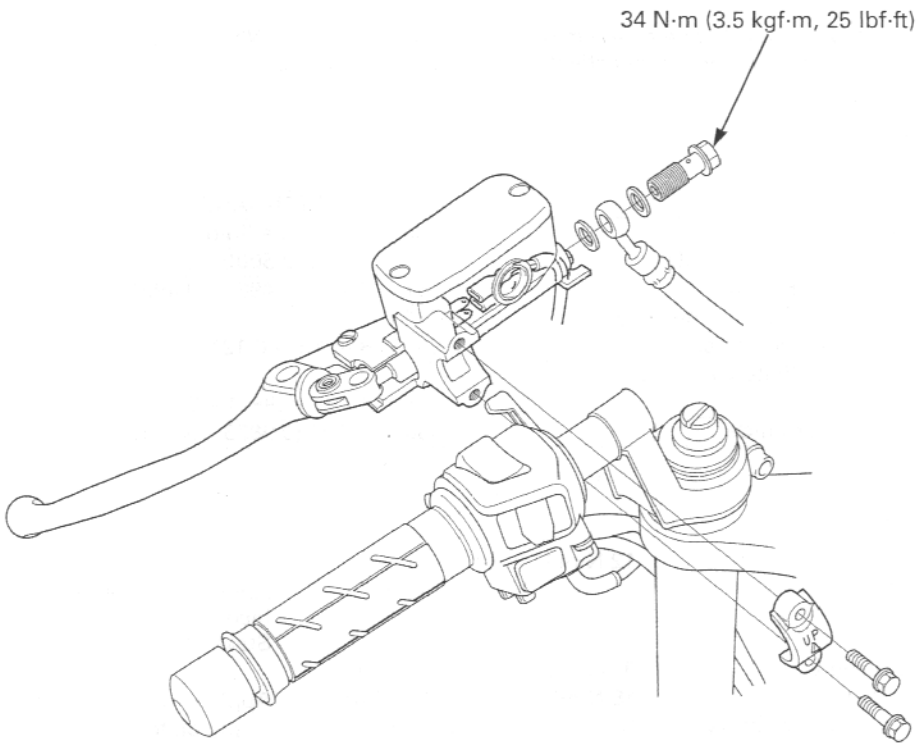
34 N·m (3.5 kgf·m, 25 lbf·ft)

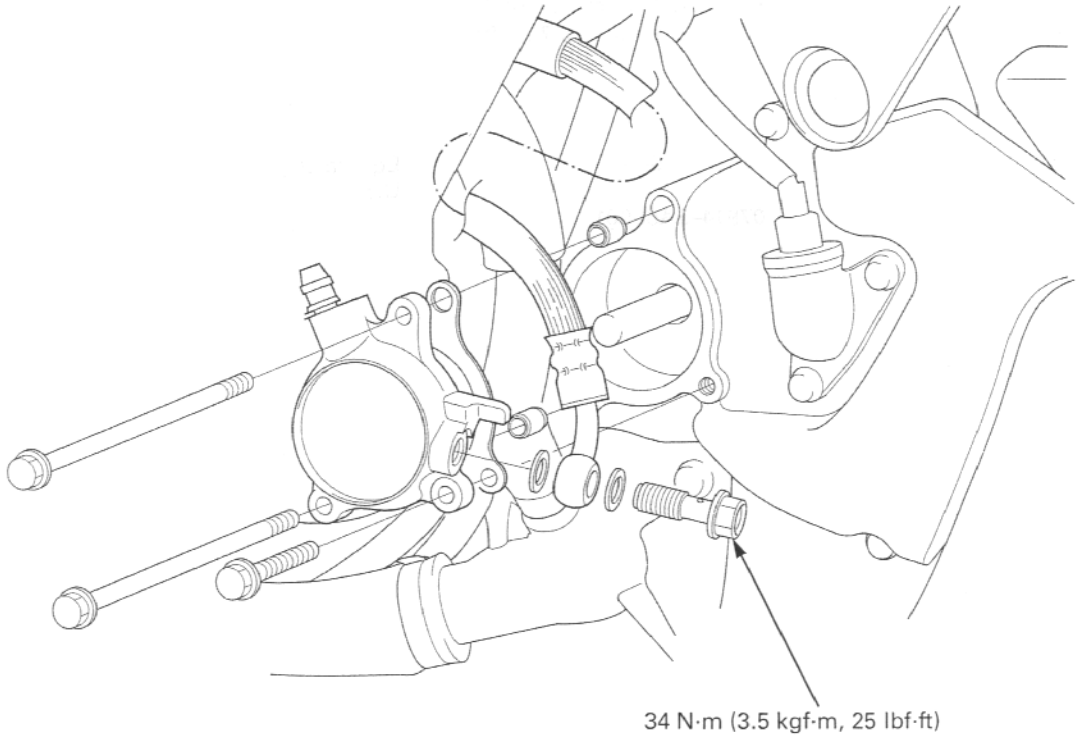
34 N·m (3.5 kgf·m, 25 lbf·ft)

SERVICE INFORMATION

GENERAL

- This section covers service of the clutch and primary drive gear. All service can be done with the engine installed in the frame.
- Transmission oil viscosity and level have an effect on clutch disengagement. When the clutch does not disengage or the motorcycle creeps with the clutch lever fully activated, inspect the transmission oil level before servicing the clutch system.

SPECIFICATIONS

Unit: mm (in)

ITEM		STANDARD	SERVICE LIMIT
Recommended clutch fluid		Honda DOT 4 brake fluid	–
Clutch master cylinder	Cylinder I.D.	12.700 – 12.743 (0.5000 – 0.5017)	12.76 (0.502)
	Piston O.D.	12.657 – 12.684 (0.4983 – 0.4994)	12.65 (0.498)
Clutch	Spring free length	46.7 (1.84)	45.8 (1.80)
	Disc thickness	2.92 – 3.08 (0.115 – 0.121)	2.5 (0.10)
	Plate warpage	–	0.30 (0.012)
Clutch outer guide I.D.		24.995 – 25.012 (0.9841 – 0.9847)	25.08 (0.987)
Mainshaft O.D. at clutch outer guide		24.980 – 24.993 (0.9835 – 0.9840)	24.96 (0.983)

TORQUE VALUES

Clutch spring bolt	12 N·m (1.2 kgf·m, 9 lbf·ft)	
Clutch center lock nut	127 N·m (13.0 kgf·m, 94 lbf·ft)	Apply oil to the thread and flange surface Stake the nut
Clutch slave cylinder bleed valve	9 N·m (0.9 kgf·m, 6.5 lbf·ft)	
Oil pump driven sprocket bolt	18 N·m (1.8 kgf·m, 13 lbf·ft)	Apply a locking agent to the threads
Ignition pulse generator rotor/primary drive gear flange bolt	103 N·m (10.5 kgf·m, 76 lbf·ft)	Apply oil to the threads and flange surface
Clutch master cylinder reservoir cap screw	2 N·m (0.2 kgf·m, 1.4 lbf·ft)	
Clutch hose oil bolt	34 N·m (3.5 kgf·m, 25 lbf·ft)	
Clutch lever pivot bolt	1 N·m (0.1 kgf·m, 0.7 lbf·ft)	
Clutch lever pivot nut	6 N·m (0.6 kgf·m, 4.3 lbf·ft)	
Clutch switch screw	1 N·m (0.1 kgf·m, 0.7 lbf·ft)	

TOOLS

Clutch center holder	07724–0050002	Equivalent commercially available in U.S.A.
Snap ring pliers	07914–SA50001	

TROUBLESHOOTING

Clutch lever soft or spongy
- Air in hydraulic system
- Low fluid level
- Hydraulic system leaking

Clutch lever hard to pull in
- Slicking master cylinder piston
- Sticking slave cylinder piston
- Clogged hydraulic system
- Damaged clutch lifter mechanism
- Faulty clutch lifter bearing
- Clutch lifter piece installed improperly

Clutch slips when accelerating
- Hydraulic system sticking
- Worn clutch disc
- Weak clutch spring
- Transmission oil mixed with molybdenum or graphite additive

Clutch will not disengage or motorcycle creeps with the clutch lever fully activated
- Air in hydraulic system
- Low fluid level
- Hydraulic system leaking or clogged
- Clutch plate warped
- Loose clutch lock nut
- Oil level too high
- Improper oil viscosity
- Damaged clutch lifter mechanism
- Clutch lifter piece installed improperly

Hard to shift
- Improper clutch operation
- Improper oil viscosity

CLUTCH FLUID REPLACEMENT/AIR BLEEDING

CLUTCH FLUID DRAINING

Support the motorcycle on its center stand.
Turn the handlebar to the right until the reservoir is parallel to the ground, before removing the reservoir cap.

Remove the screws, reservoir cap, set plate and diaphragm.

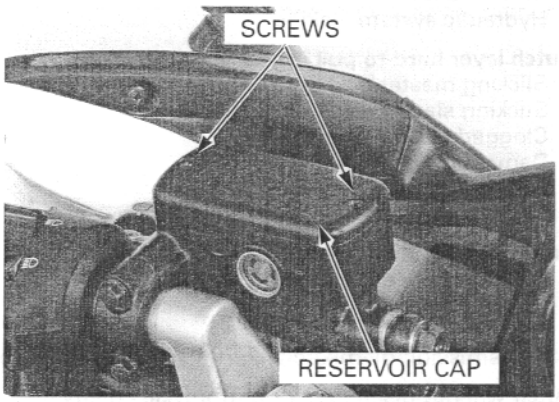

Connect a bleed hose to the bleed valve of the clutch slave cylinder.
Loosen the bleed valve and pump the clutch lever until fluid stops flowing out off the bleed valve.

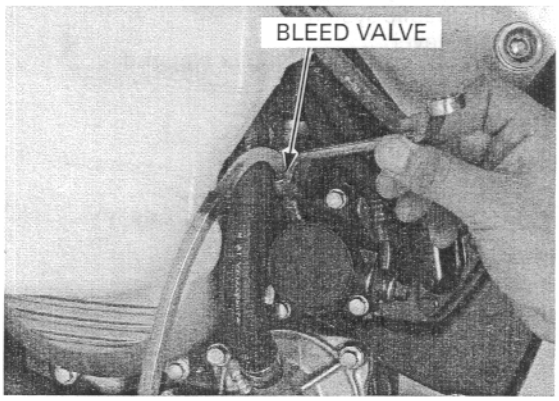

CLUTCH FLUID FILLING/BLEEDING

Close the bleed valve.
Fill the reservoir with DOT 4 Brake fluid from a sealed container.

Connect a commercially available brake bleeder to the bleed valve.
Pump the brake bleeder and loosen the bleed valve.
Add brake fluid when the fluid level in the reservoir is low.

- Check the fluid level often while bleeding the clutch to prevent air from being pumped into the system.
- When using a brake bleeding tool, follow the manufacturer's operating instruction.

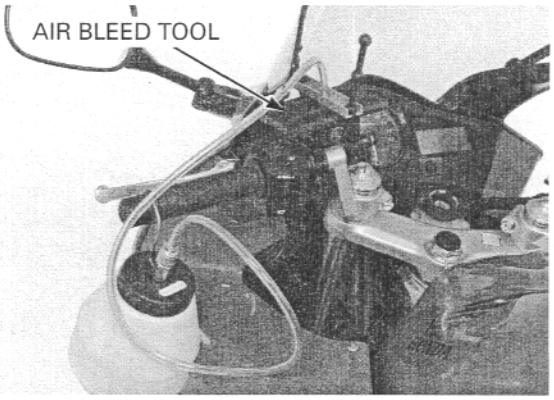

If air is entering the bleeder from around the bleed valve threads, seal the threads with teflon tape.

Repeat the above procedures until new fluid flows out of the bleed valve and air bubbles do not appear in the plastic hose.

Close the bleed valve.

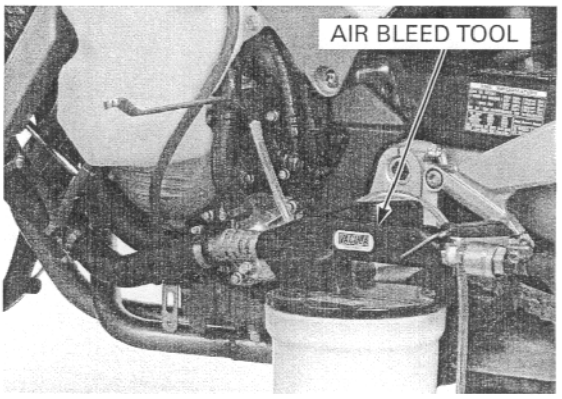

If a brake bleeder is not available, use the following procedure.
Pump the clutch lever until lever resistance is felt.

Connect a bleed hose to the bleed valve and bleed the system as follows:

1. Squeeze the clutch lever, open the bleed valve 1/4 of a turn and then close it. Do not release the clutch lever until the bleed valve has been closed.
2. Release the clutch lever slowly and wait several seconds after it reaches the end of its travel.

Repeat steps 1 and 2 until air bubbles do not appear in the bleed hose.

Tighten the bleed valve to the specified torque.

TORQUE: 9 N·m (0.9 kgf·m, 6.5 lbf·ft)

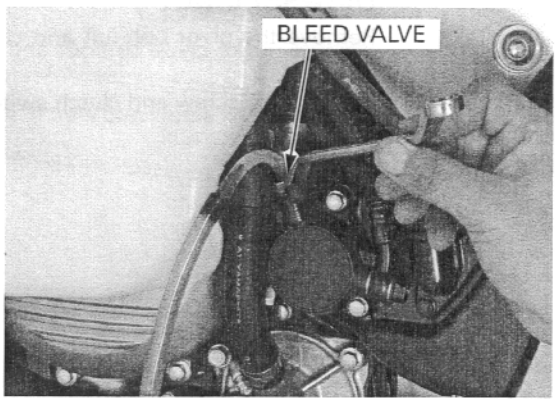

Fill the reservoir to the casting ledge with DOT 4 brake fluid from a sealed container.

Install the diaphragm, set plate and reservoir cap, and tighten the cap screws to the specified torque.

TORQUE: 2 N·m (0.2 kgf·m, 1.4 lbf·ft)

Check the clutch operation (page 3-29).

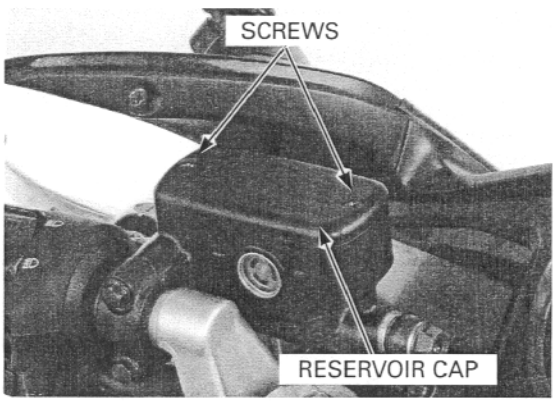

CLUTCH MASTER CYLINDER

REMOVAL

Drain the clutch hydraulic system (page 9-6).

Disconnect the clutch switch wire connectors.

Avoid spilling fluid on painted, plastic, or rubber parts. Place a shop towel over these parts whenever the system is serviced.

Remove the clutch hose oil bolt, sealing washers and clutch hose eyelet.

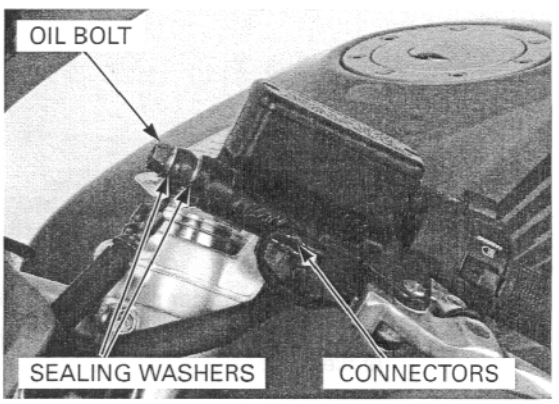

Remove the bolts from the master cylinder holder and remove the master cylinder assembly.

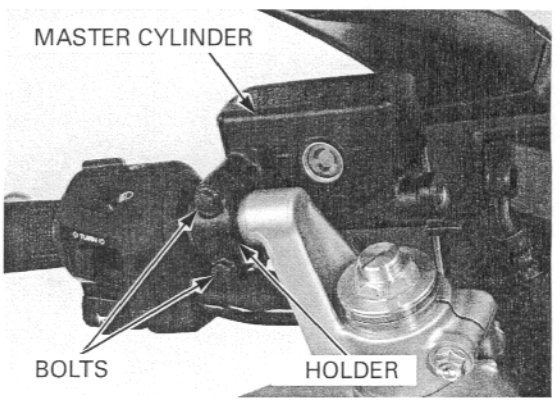

DISASSEMBLY

Remove the pivot bolt/nut and clutch lever assembly.

Remove the screw and clutch switch.

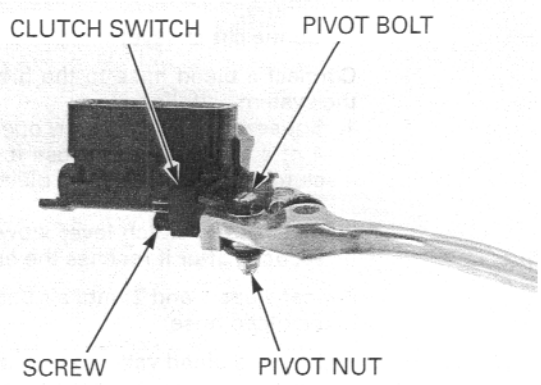

Remove the boot and push rod.

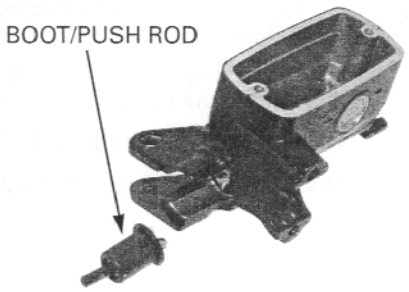

Remove the snap ring from the master cylinder body using the special tool as shown.

TOOL:
Snap ring pliers **07914–SA50001**

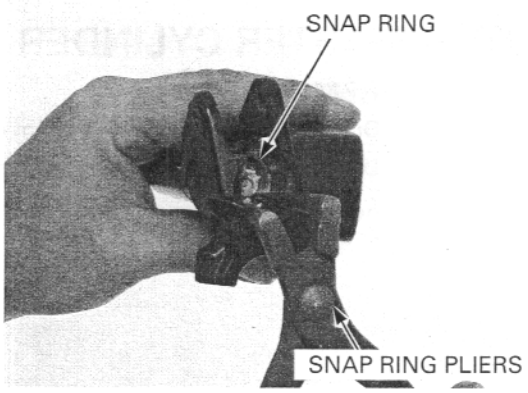

Remove the master piston assembly and spring.

Clean the inside of the cylinder and reservoir with brake fluid.

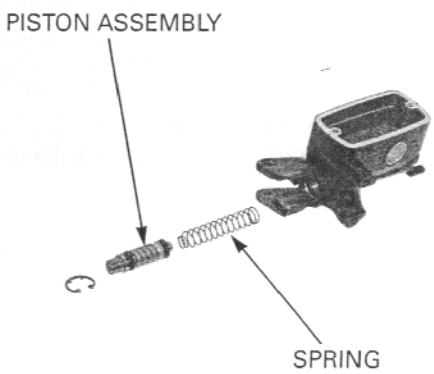

INSPECTION

Check the piston boot, primary cup and secondary cup for fatigue or damage.
Check the master cylinder and piston for abnormal scratches.
Measure the master cylinder I.D.

SERVICE LIMIT: 12.76 mm (0.502 in)



Measure the master piston O.D.

SERVICE LIMIT: 12.65 mm (0.498 in)

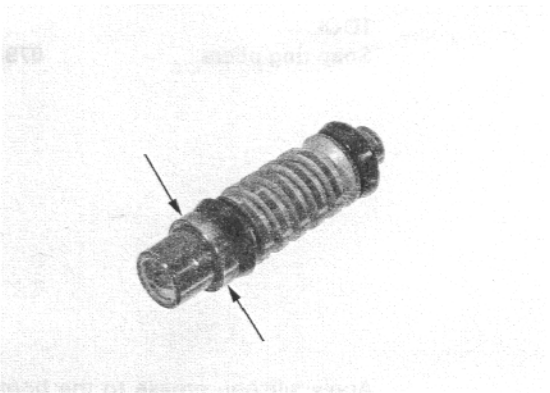

ASSEMBLY

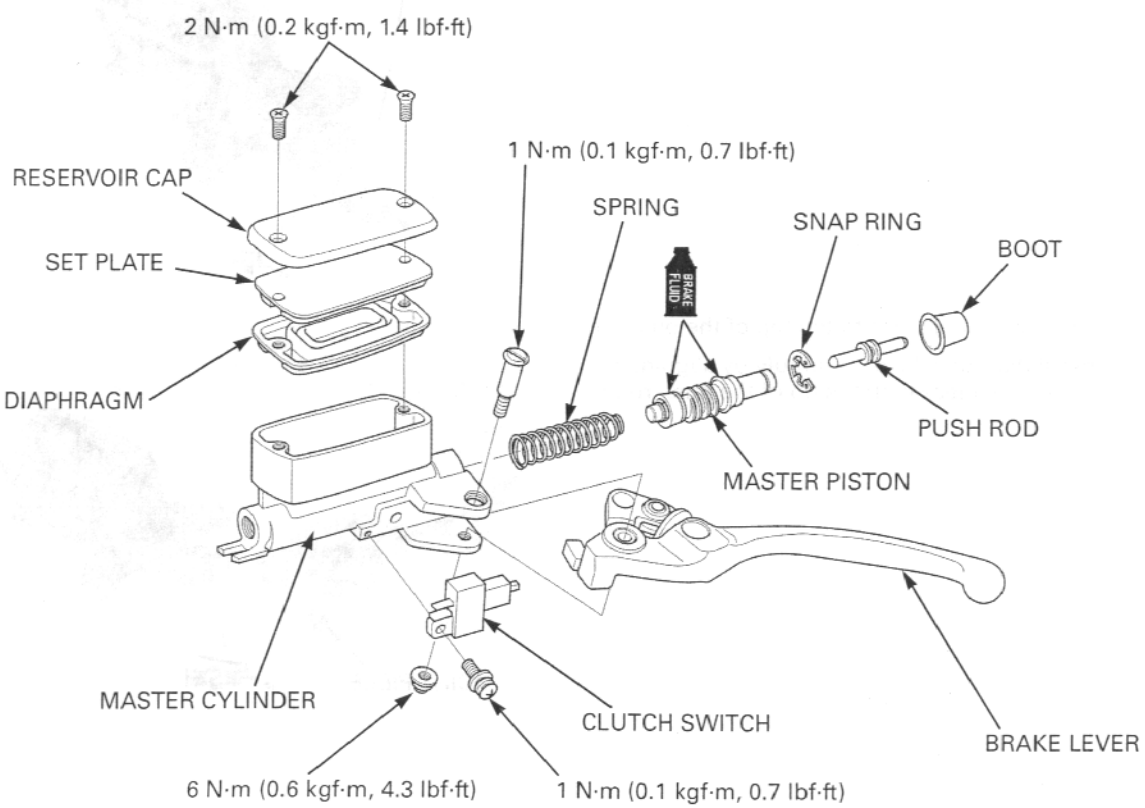

Coat all parts with clean brake fluid before assembly.
Dip the piston in brake fluid.
Install the primary and secondary cups onto the master piston.

When installing the cups, do not allow the lips to turn inside out.

Install the spring and master piston assembly into the master cylinder.

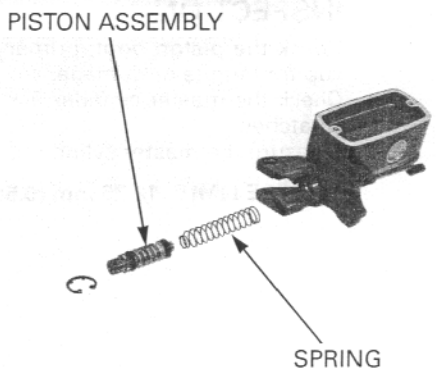

Be certain the snap ring is firmly seated in the groove.

Install the snap ring using the special tool.

TOOL:
Snap ring pliers **07914–SA50001**

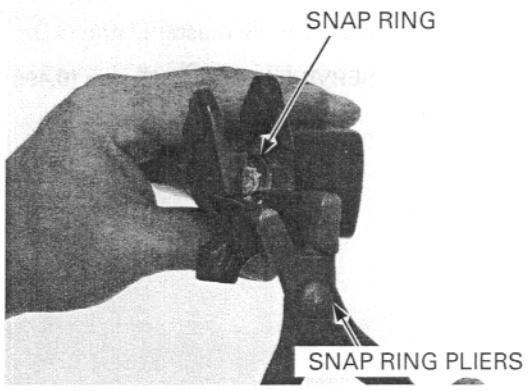

Apply silicone grease to the boot inside and tip of the push rod.
Install the push rod and boot.

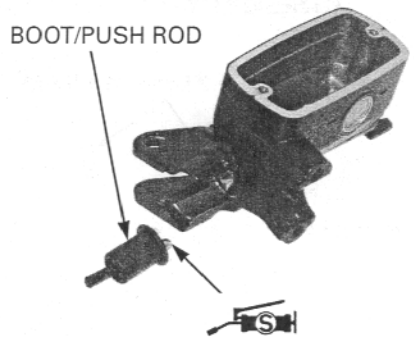

Apply silicone grease to the top of the push rod.

Install the clutch lever assembly by aligning the hole of the joint piece with the tip of the push rod.

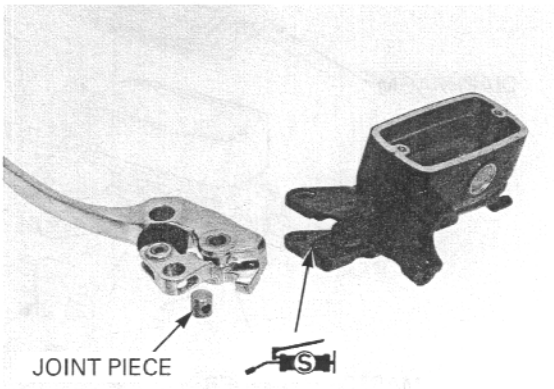

Install and tighten the pivot bolt to the specified torque.

TORQUE: 1 N·m (0.1 kgf·m, 0.7 lbf·ft)

Hold the pivot bolt and tighten the pivot nut to the specified torque.

TORQUE: 6 N·m (0.6 kgf·m, 4.3 lbf·ft)

Install the clutch switch and tighten the screw to the specified torque.

TORQUE: 1 N·m (0.1 kgf·m, 0.7 lbf·ft)

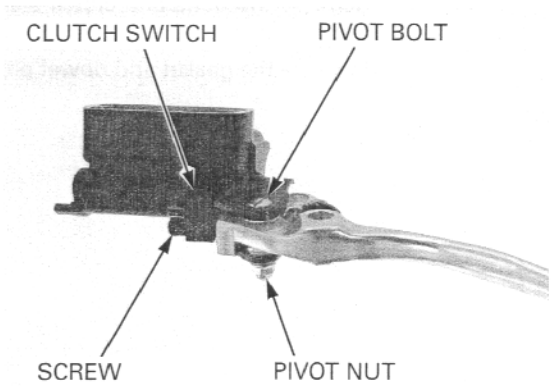

INSTALLATION

Place the master cylinder assembly onto the handlebar.
Align the end of the master cylinder with the punch mark on the handlebar.

Install the master cylinder holder with the "UP" mark facing up.
Tighten the upper bolt first, then the lower bolt.

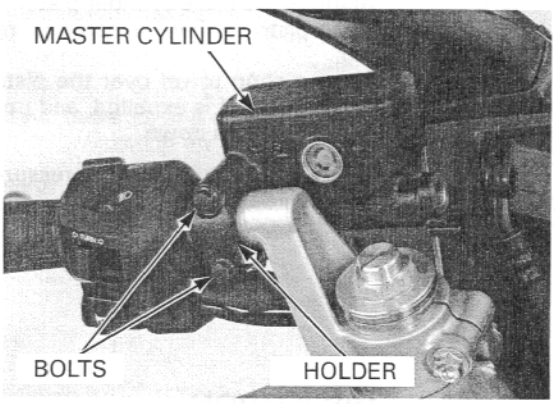

Install the clutch hose eyelet with the oil bolt and new sealing washers.
While pushing the clutch hose against the stopper, tighten the oil bolt to the specified torque.

TORQUE: 34 N·m (3.5 kgf·m, 25 lbf·ft)

Connect the clutch switch connectors.

Fill the reservoir to the upper level and bleed the hydraulic system (page 9-6).

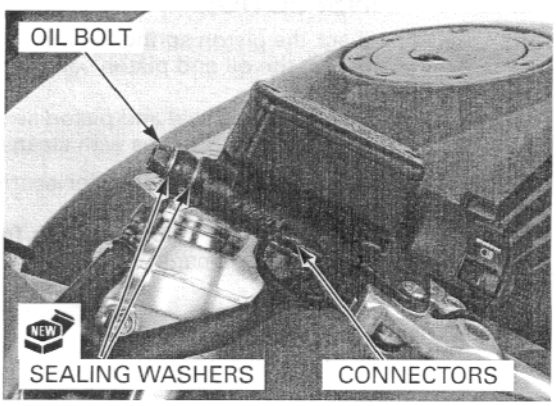

CLUTCH SLAVE CYLINDER

REMOVAL

Drain the clutch hydraulic system (page 9-6).

Avoid spilling fluid on painted, plastic, or rubber parts. Place a shop towel over these parts whenever the system is serviced.

Remove the brake hose oil bolt, sealing washers and clutch hose eyelet.

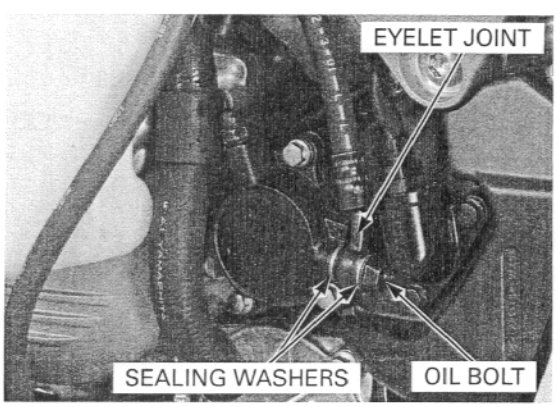

Remove the bolts and clutch slave cylinder assembly.

Remove the gasket and dowel pins.

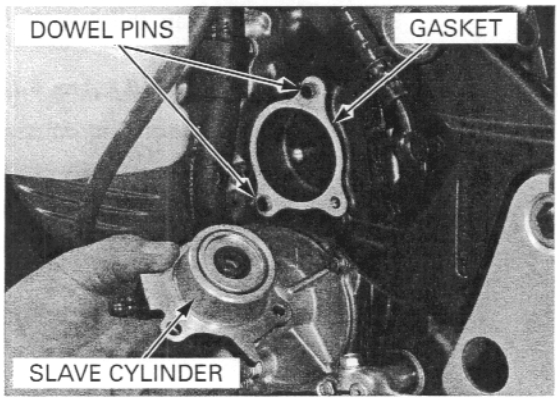

DISASSEMBLY

Remove the slave cylinder piston and spring.
If the piston is hard to remove, remove the following:
Place a shop towel over the piston to cushion the piston when it is expelled, and position the cylinder with the piston down.

Do not use high pressure air or bring the nozzle to close to the inlet.

Apply small squirts of air pressure to the fluid inlet to remove the piston.

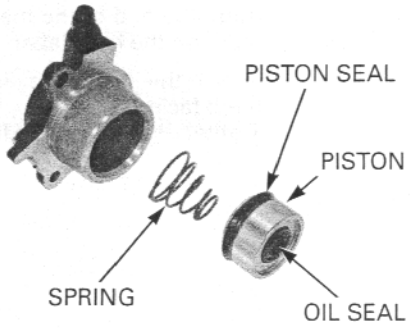

INSPECTION

Check the piston spring for weakness or damage.
Inspect the oil and piston seals for damage or deterioration.
Replace the oil seal and piston seal if necessary.
Clean the seal grooves with clean brake fluid.

Check the slave cylinder for scoring or other damage.
Check the slave cylinder piston for scratches, scoring or other damage.

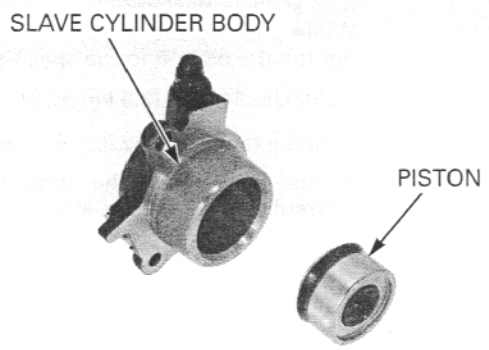

ASSEMBLY

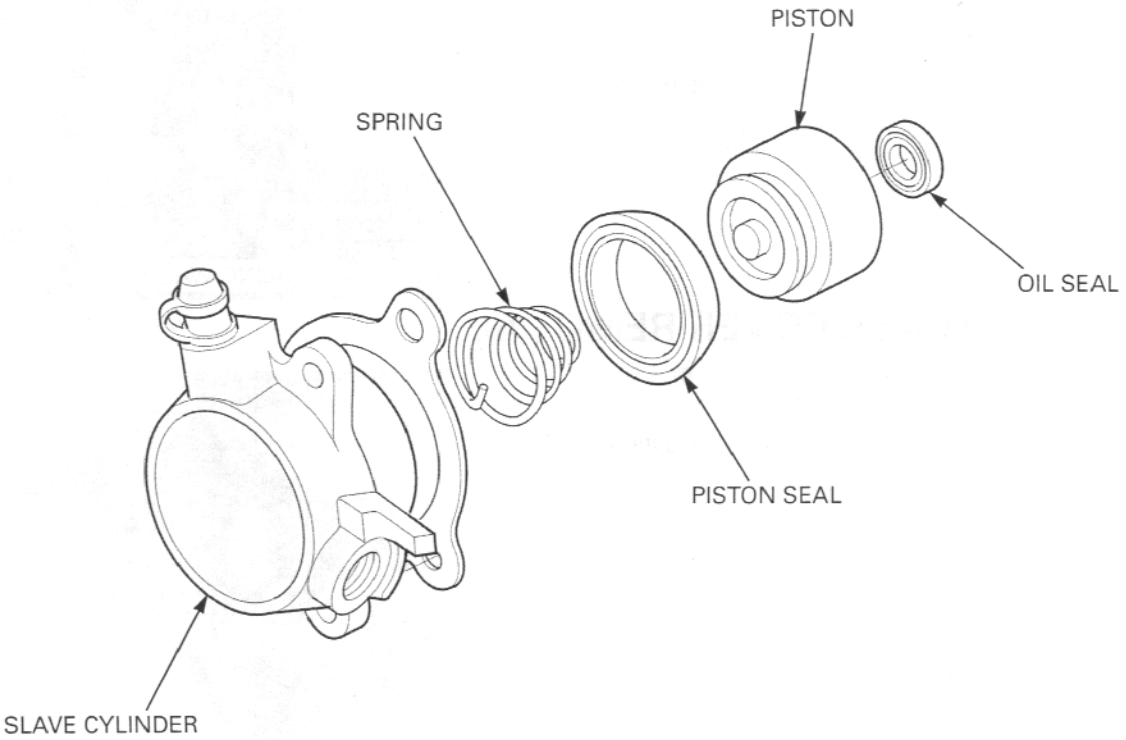

Install the new piston seal with its groove side facing to the slave cylinder.
Install the new oil seal with its groove side facing to the slave cylinder piston.
Install the spring into the boss of the piston.
Lubricate the piston and piston seal with brake fluid.
Install the spring and piston into the slave cylinder.

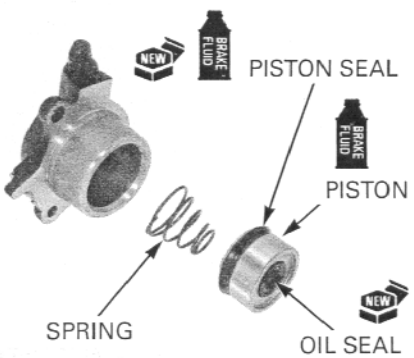

INSTALLATION

Install the dowel pins and new gasket.
Apply silicone grease to the top of the push rod.
Install the slave cylinder onto the drive sprocket cover.

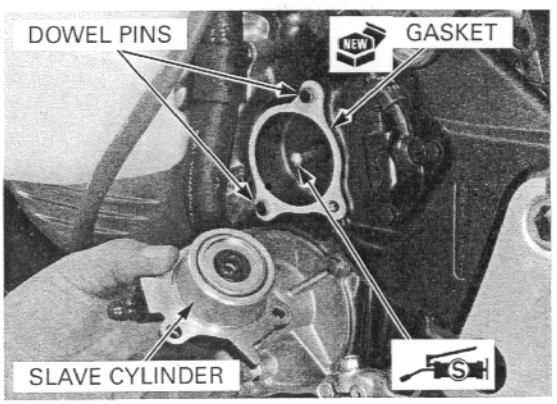

Install and tighten the SH bolts.

Install the clutch hose eyelet with the oil bolt and new sealing washers.

While pushing the clutch hose against the stopper and tighten the oil bolt to the specified torque.

TORQUE: 34 N·m (3.5 kgf·m, 25 lbf·ft)

Fill the reservoir to the upper level and bleed the hydraulic system (page 9-6).

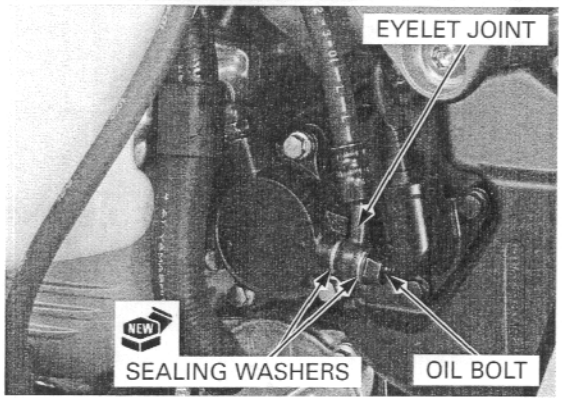

RIGHT CRANKCASE COVER REMOVAL

Remove the side cowl (page 2-8).
Drain the engine oil (page 3-15).

Disconnect the ignition pulse generator 2P (Red) connector.

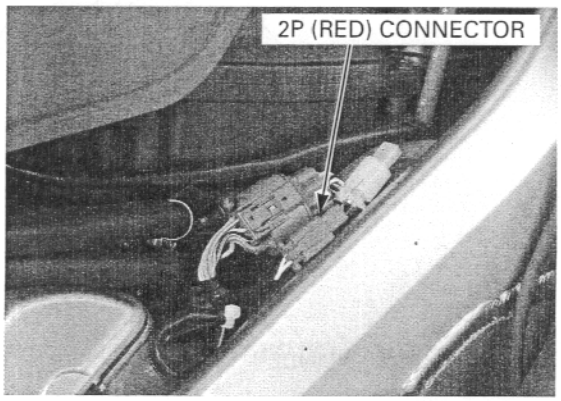

Remove the right crankcase cover SH bolts, wire clamp and right crankcase cover.

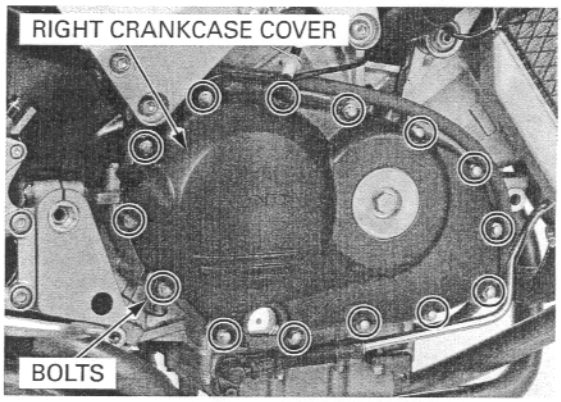

Remove the gasket and dowel pins.

See page 19-11 ignition pulse generator removal/ installation.

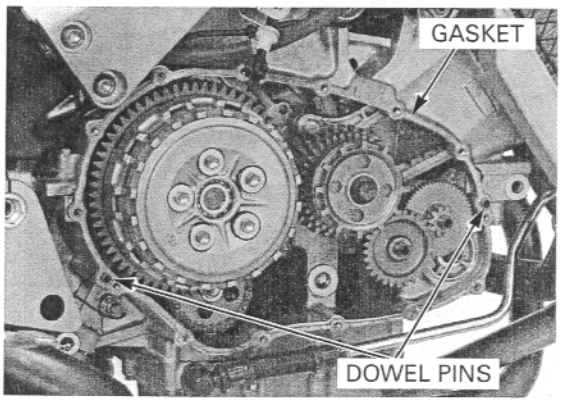

CLUTCH

REMOVAL

Remove the right crankcase cover (page 9-14).

Remove the clutch spring bolts, springs and pressure plate.

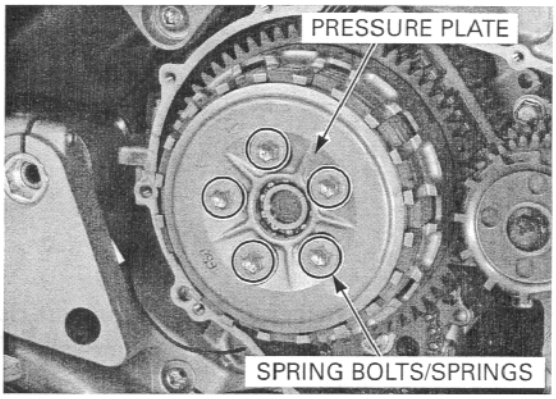

Remove the clutch lifter piece and lifter rod.

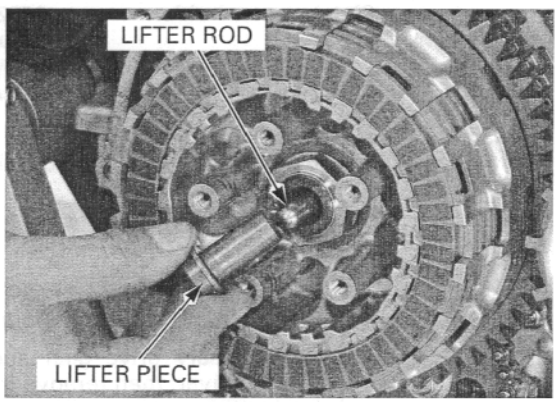

Remove the clutch discs and plates.

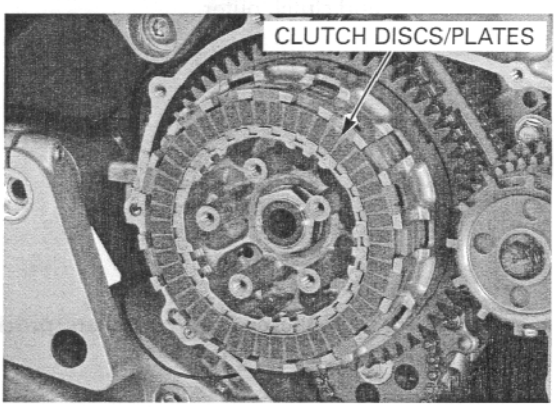

Remove the friction spring and spring seat.

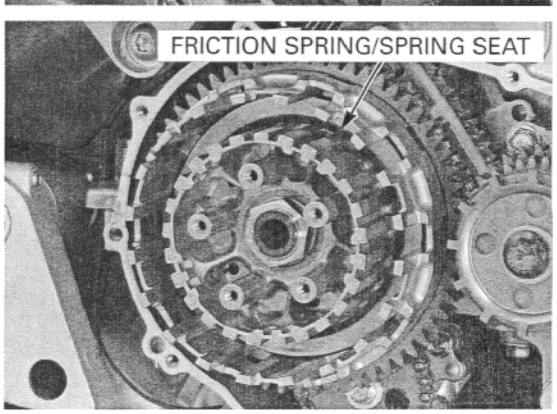

Unstake the clutch center lock nut.

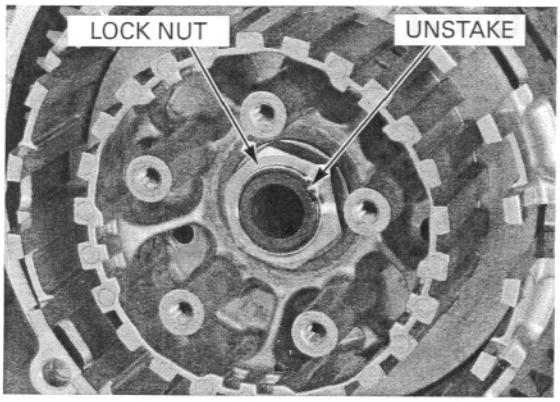

Hold the clutch center with the clutch center holder, then loosen and remove the lock nut.

TOOL:

Clutch center holder	**07724–0050002 (Equivalent commercially available in U.S.A.)**

Discard the lock nut.
Remove the lock washer and clutch center.

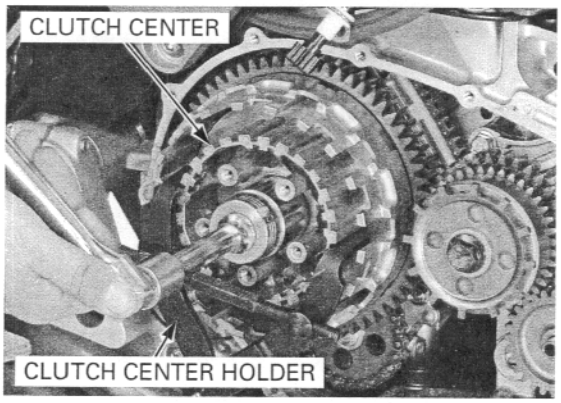

Remove the starter clutch assembly (page 9-11).

Align the primary drive gear and sub-gear teeth with a screwdriver, then remove the needle bearing and clutch outer.

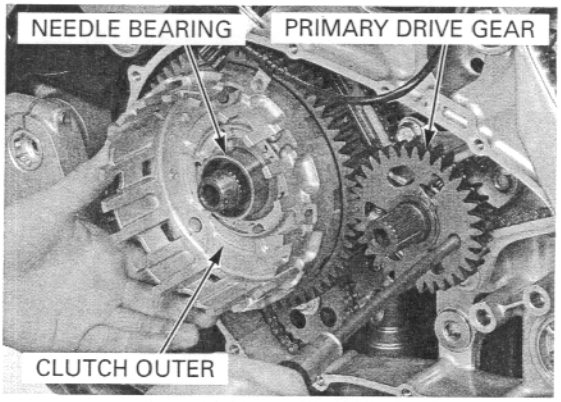

Remove the oil pump driven sprocket bolt/washer.

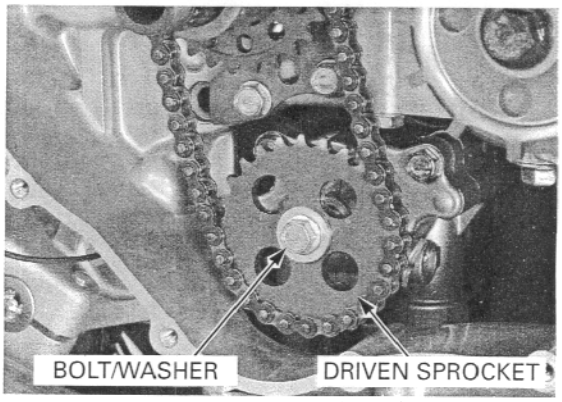

Remove the clutch outer guide, oil pump drive sprocket, driven sprocket and drive chain as an assembly.

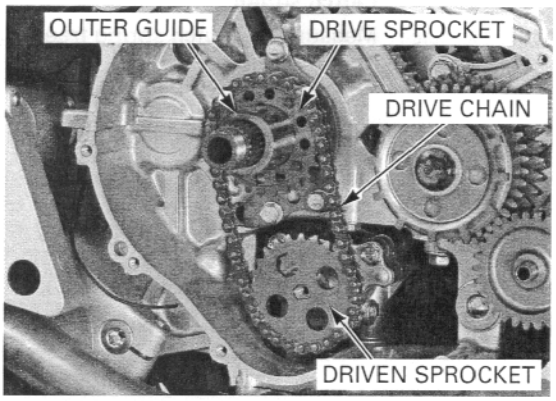

Remove the collar from the mainshaft.

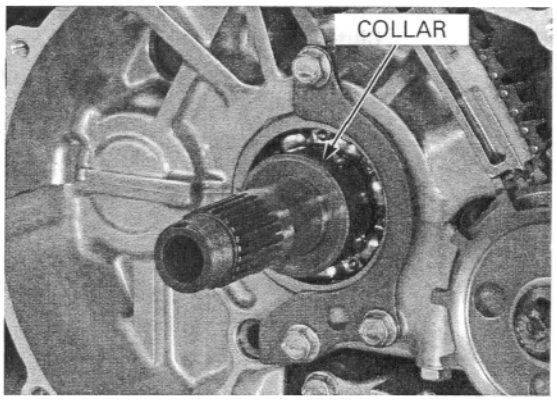

INSPECTION

Clutch lifter bearing

Turn the inner race of the lifter bearing with your finger.
The bearing should turn smoothly and quietly.
Also check that the outer race of the bearing fits tightly in the pressure plate.
Replace the bearing if the inner race does not turn smoothly, quietly, or if the outer race fit loosely in the pressure plate.

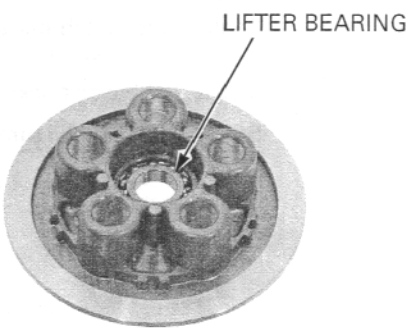

Clutch lifter rod

Check the clutch lifter rod for wear and true.

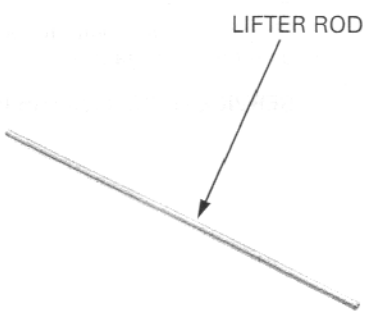

Clutch spring

Replace the clutch springs as a set.

Measure the clutch spring free length.

SERVICE LIMIT: 45.8 mm (1.80 in)

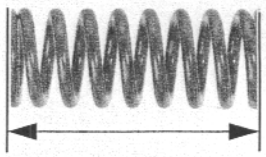

Clutch center

Check the grooves of the clutch center for damage or wear caused by the clutch plates.

Replace if necessary.

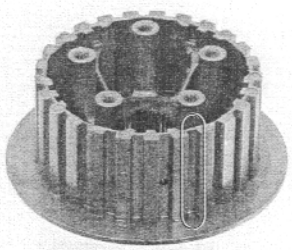

Clutch disc

Replace the clutch discs and plates as a set.

Replace the clutch discs if they show signs of scoring or discoloration.

Measure the disc thickness of each disc.

SERVICE LIMIT: 2.5 mm (0.10 in)

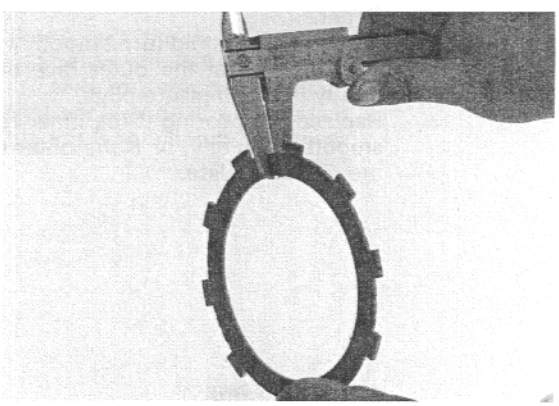

Clutch plate

Replace the clutch discs and plates as a set.

Check each disc plate for warpage on a surface plate using a feeler gauge.

SERVICE LIMIT: 0.30 mm (0.012 in)

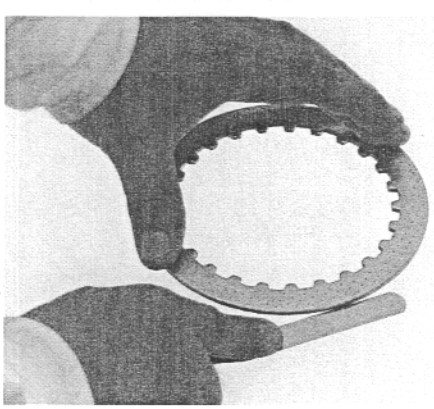

Friction spring/spring seat

Check the friction spring and spring seat for wear or other damage, replace if necessary.

Replace if necessary.

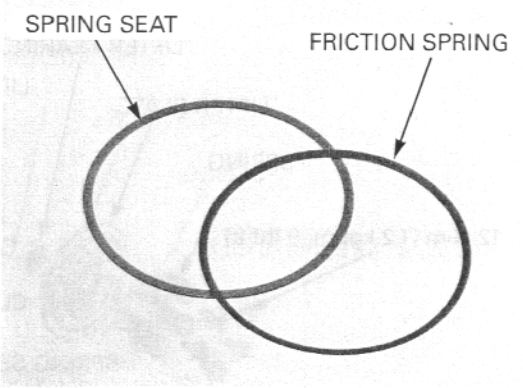

Clutch outer

Check the slots of the clutch outer for damage or wear caused by the clutch discs.

Replace if necessary.

Check the clutch outer needle bearing for wear or damage, replace if necessary.

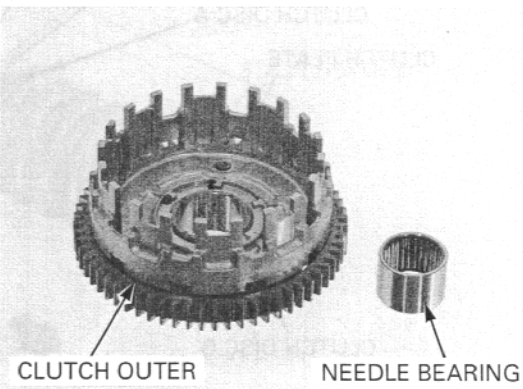

Clutch outer guide

Measure the I.D. of the clutch outer guide.

SERVICE LIMIT: 25.08 mm (0.987 in)

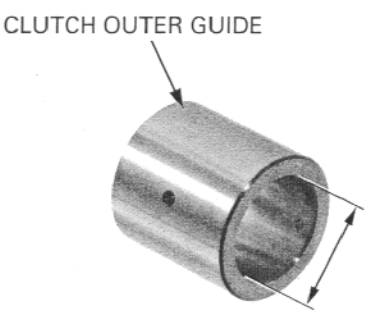

INSTALLATION

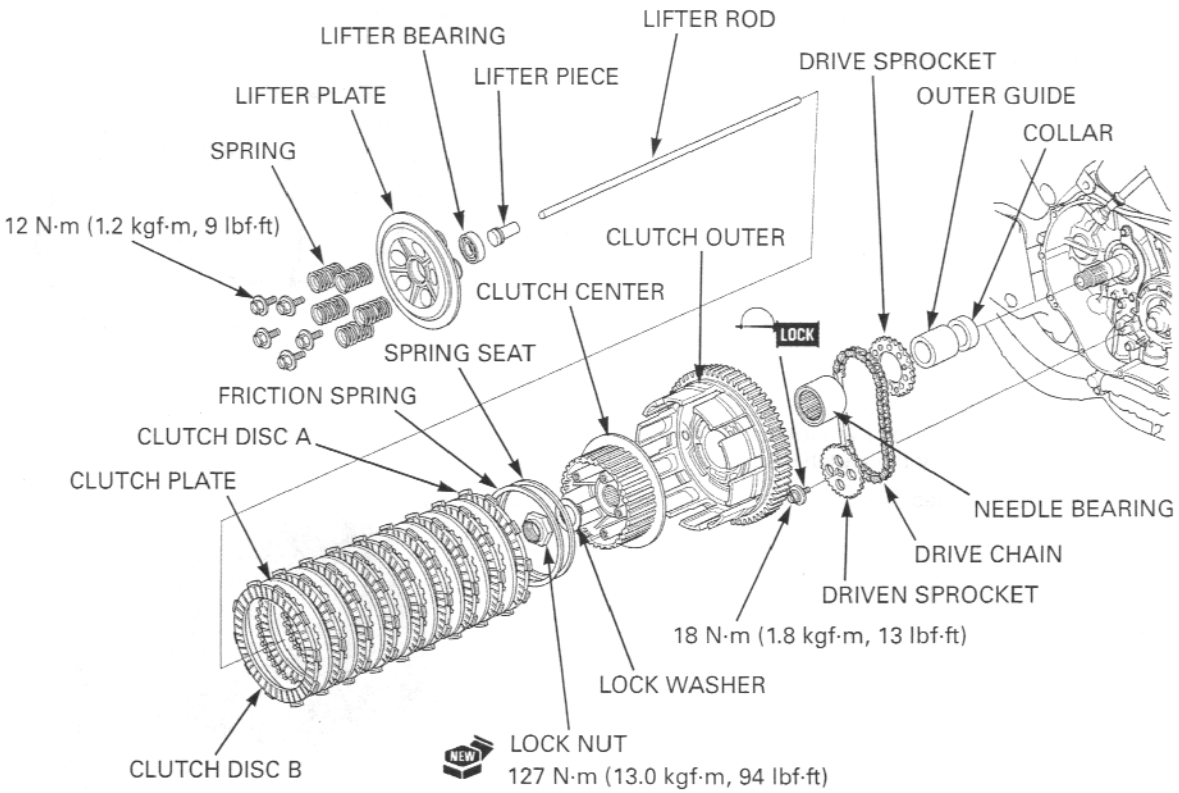

Install the collar onto the mainshaft.

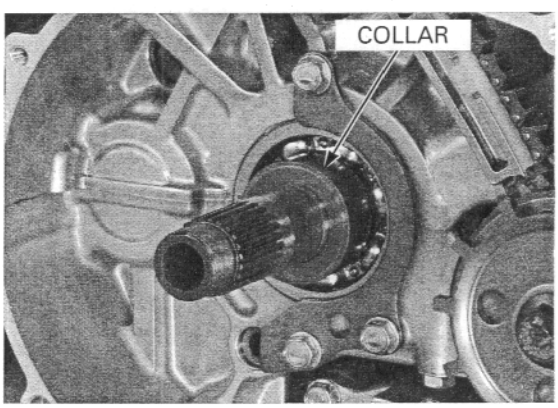

Make sure the four bosses on the oil pump drive sprocket face toward the clutch outer.

Install the clutch outer guide, oil pump drive/driven sprocket and drive chain as an assembly.

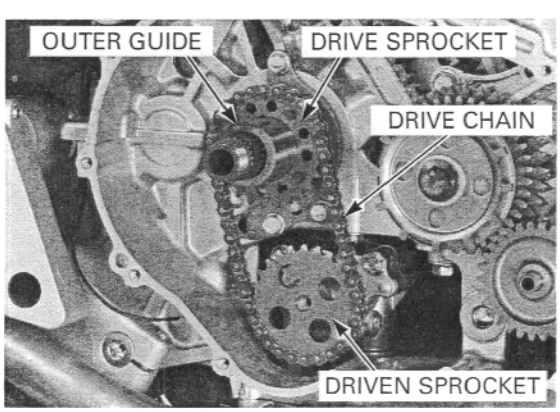

Apply a locking agent to the threads of the oil pump driven sprocket bolt.
Tighten the driven sprocket bolt to the specified torque.

TORQUE: 18 N·m (1.8 kgf·m, 13 lbf·ft)

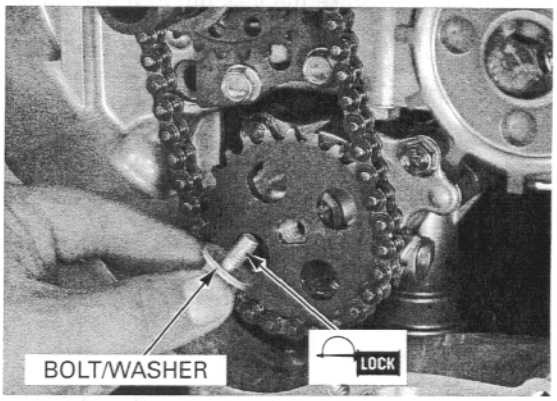

Align the primary drive gear and sub-gear teeth with a screwdriver as shown.

Align the bosses on the oil pump drive sprocket with the holes in the clutch outer by turning the driven sprocket with your finger.

Install the clutch outer and needle bearing.

Install the starter clutch assembly (page 19-15).

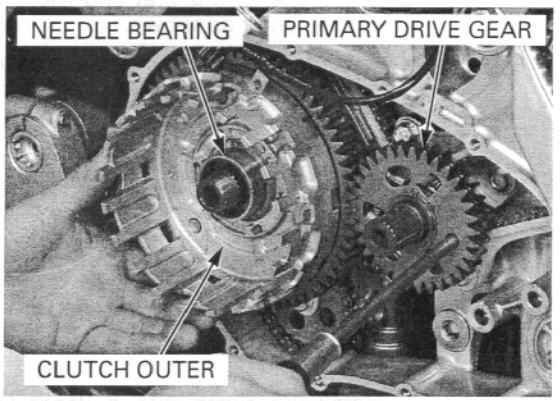

Install the clutch center.

Install the lock washer with its "OUT SIDE" mark facing out.

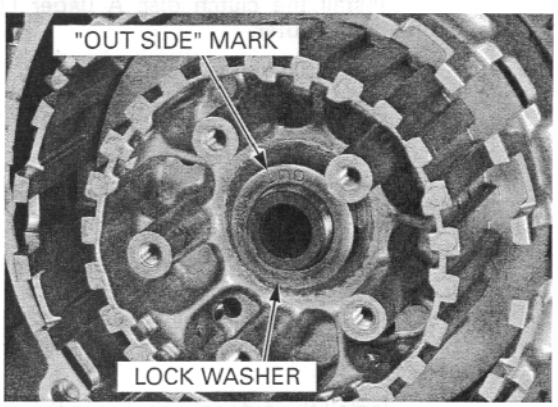

Install the new lock nut.

Hold the clutch center with the clutch center holder, then tighten the lock nut to the specified torque.

TOOL:

Clutch center holder	**07724–0050002 (Equivalent commercially available in U.S.A.)**

TORQUE: 127 N·m (13.0 kgf·m, 94 lbf·ft)

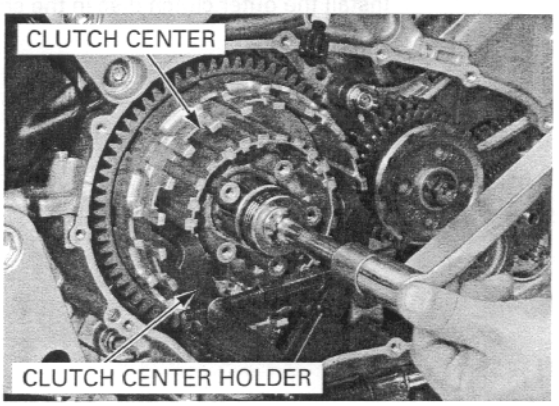

Be careful not to damage the mainshaft threads.

Stake the lock nut into the mainshaft groove with a punch.

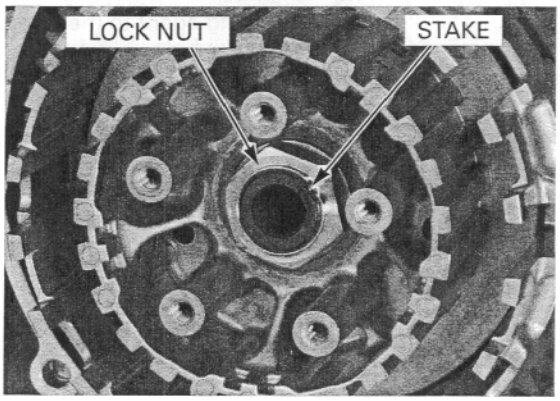

Install the spring seat and friction spring onto the clutch center as shown.

Coat the clutch discs and plates with clean engine oil.

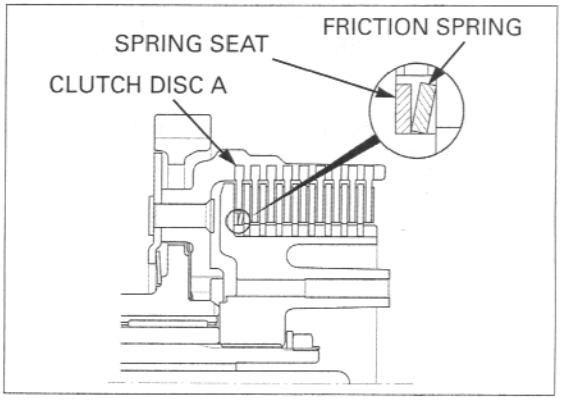

Install the clutch disc A (lager I.D. disc) into the clutch outer.

Install the clutch plate.

Stack the clutch discs B and plates alternately.

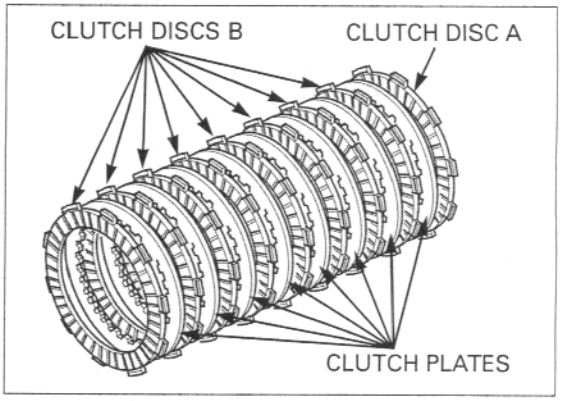

Install the outer clutch disc in the shallow slot on the clutch outer.

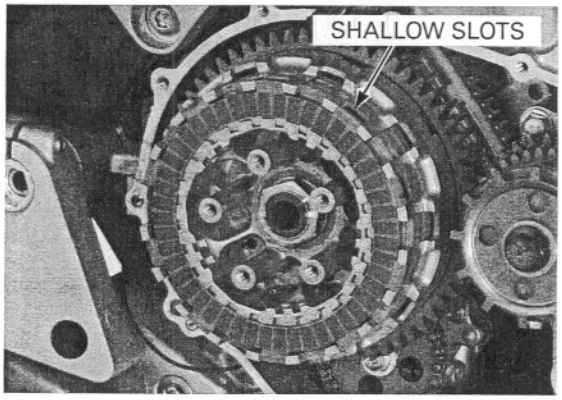

Install the clutch lifter rod into the mainshaft.

Apply grease to the tip of the lifter rod and install the clutch lifter piece into the mainshaft.

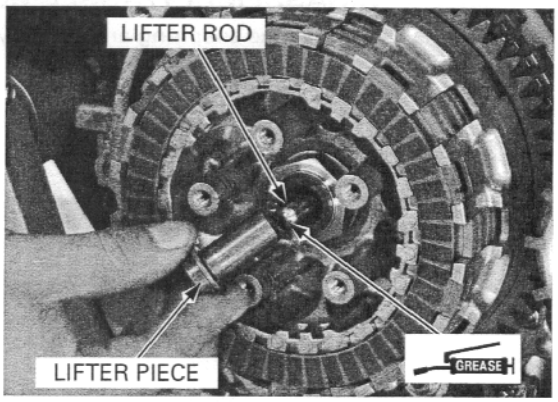

Install the lifter bearing into the pressure plate.
Install the pressure plate.
Install the clutch springs and spring bolts.
Tighten the bolts in a crisscross pattern in 2 – 3 steps, then tighten the bolts to the specified torque.

TORQUE: 12 N·m (1.2 kgf·m, 9 lbf·ft)

Install the right crankcase cover (page 9-25).

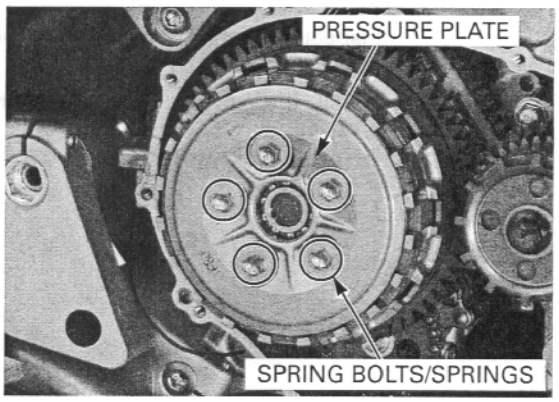

PRIMARY DRIVE GEAR

REMOVAL

Remove the starter clutch assembly (page 19-11).

Remove the primary drive gear guide from the crankshaft.

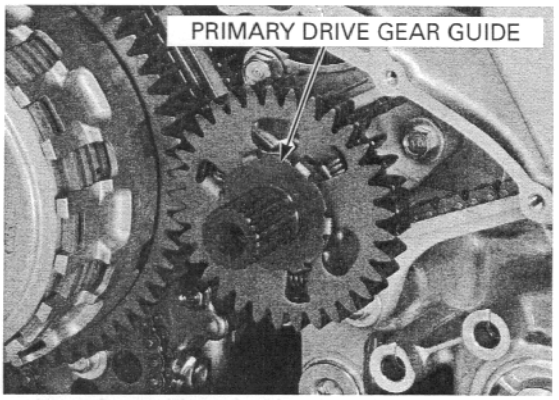

Remove the primary drive gear from the crankshaft while aligning the sub-gear teeth with the primary drive gear teeth with a screwdriver.

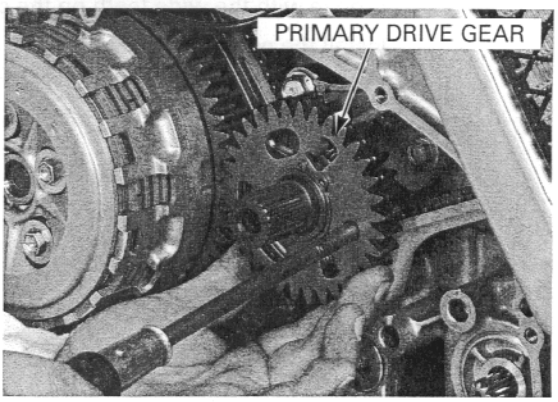

DISASSEMBLY/ASSEBMLY

Remove the snap ring and primary drive sub-gear.

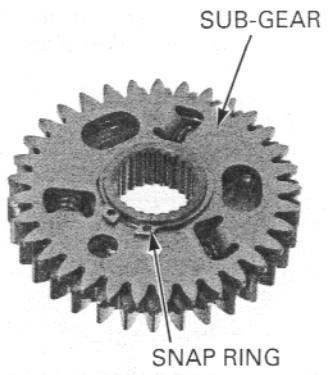

Inspect the spring for fatigue or other damage, replace if necessary.

Install the springs into the primary drive gear grooves.
Install the sub-gear by aligning the holes.

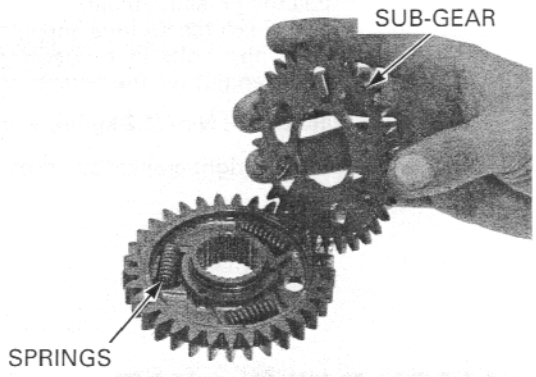

Install the snap ring securely into the groove.

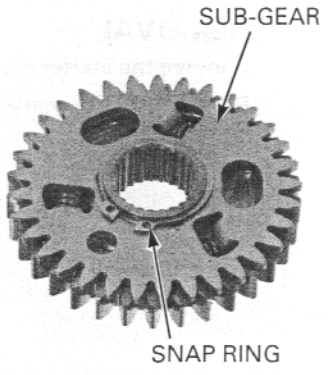

INSTALLATION

Install the primary drive gear by aligning its wide groove with the wide teeth on the crankshaft.

Install the primary drive gear while aligning the sub-gear teeth with the primary drive gear teeth with a screwdriver.

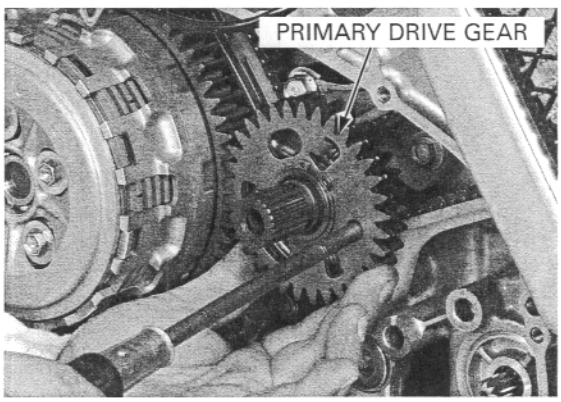

Install the primary drive gear guide.

Install the starter clutch assembly (page 19-15).

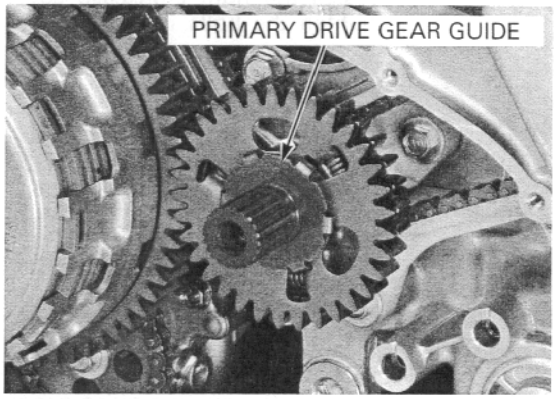

RIGHT CRANKCASE COVER INSTALLATION

Apply sealant to the mating surfaces of the crankcase as shown.

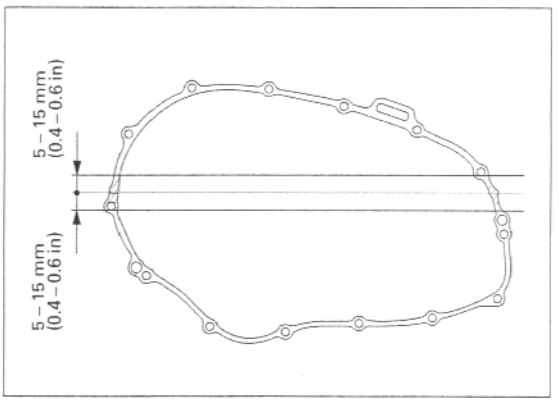

Install the two dowel pins and new gasket.

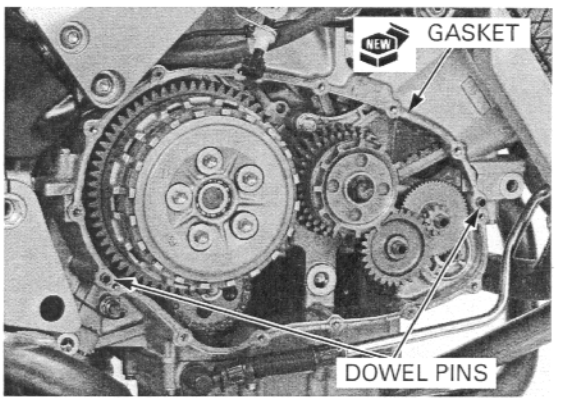

Apply sealant to the ignition pulse generator grommet.

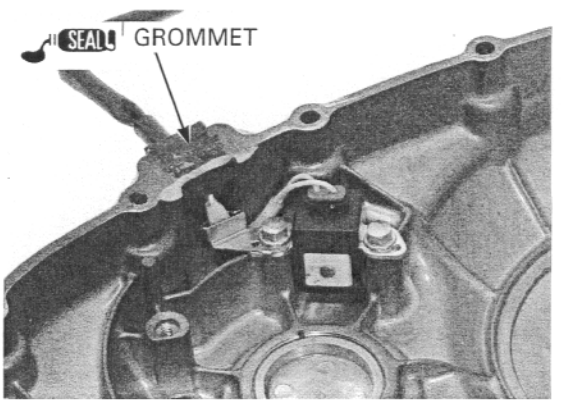

Install the right crankcase cover, wire clamp and tighten the bolts in a crisscross pattern in 2 or 3 steps.

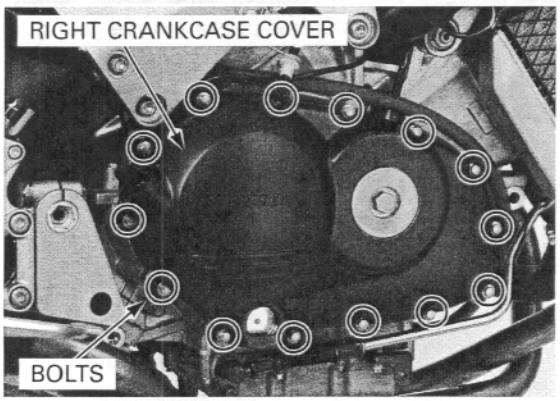

Connect the ignition pulse generator 2P (Red) connector.

Pour the recommended engine oil (page 3-14).

Install the removed parts in the reverse order of removal.

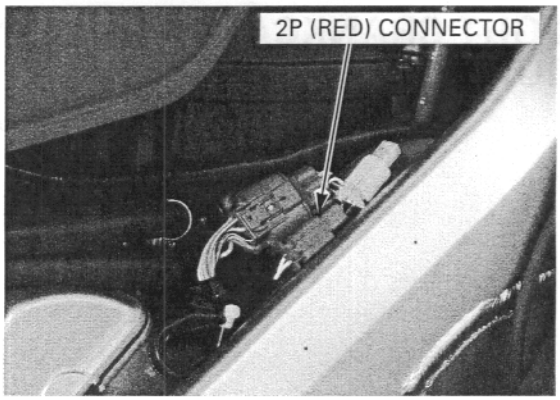

10. GEARSHIFT LINKAGE

COMPONENT LOCATION 10-2

SERVICE INFORMATION 10-3

TROUBLESHOOTING 10-3

DRIVE SPROCKET REMOVAL 10-4

GEARSHIFT LINKAGE 10-5

DRIVE SPROCKET INSTALLATION 10-10

COMPONENT LOCATION

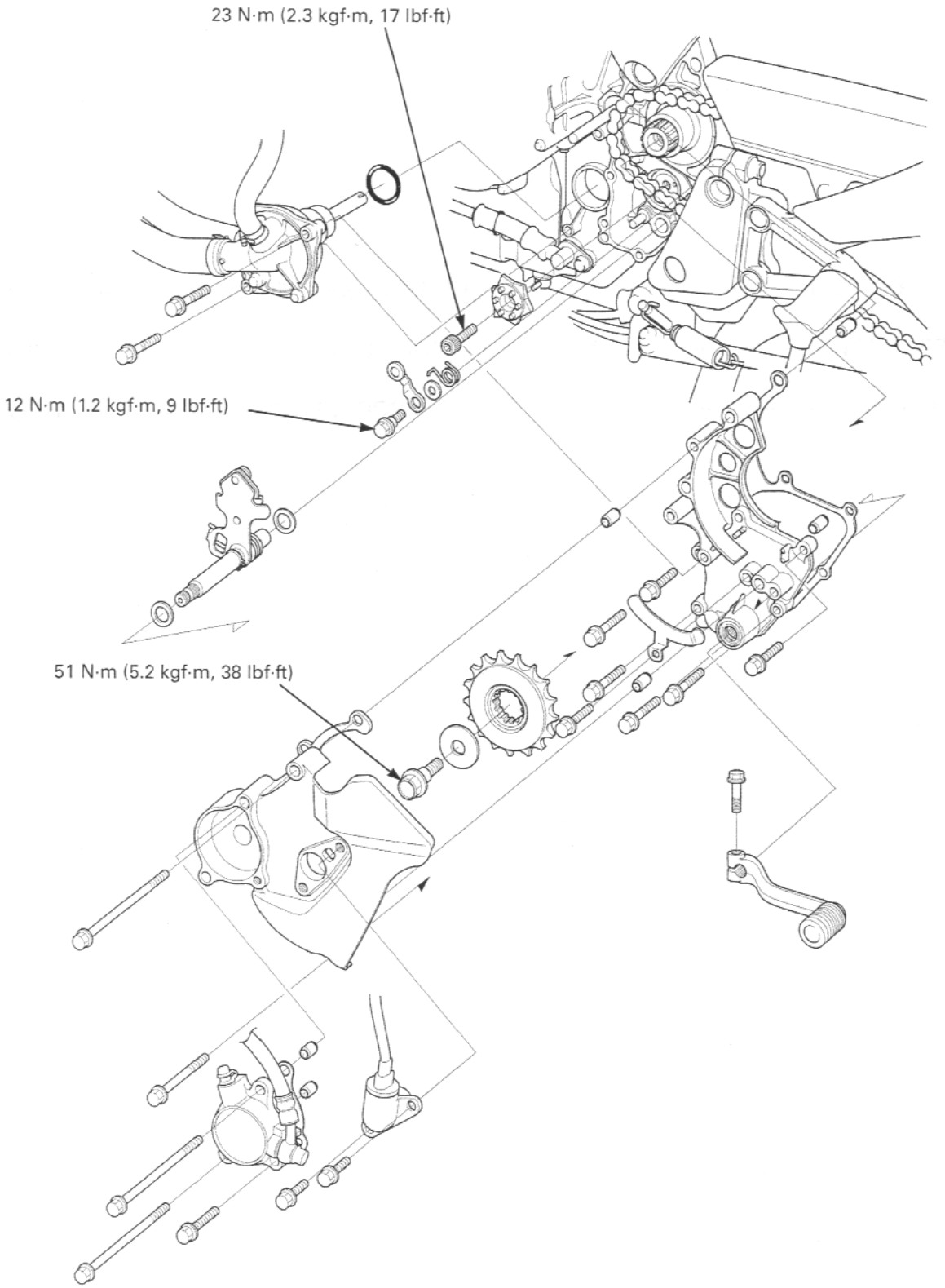

SERVICE INFORMATION

GENERAL

- The gearshift linkage service can be done with the engine installed in the frame.

TORQUE VALUES

Drive sprocket cover rubber mounting bolt	12 N·m (1.2 kgf·m, 9 lbf·ft)	CT bolt Apply a locking agent to the threads
Drive sprocket special bolt	51 N·m (5.2 kgf·m, 38 lbf·ft)	
Shift drum center socket bolt	23 N·m (2.3 kgf·m, 17 lbf·ft)	Apply a locking agent to the threads
Shift drum stopper arm pivot bolt	12 N·m (1.2 kgf·m, 9 lbf·ft)	
Gearshift spindle return spring pin	23 N·m (2.3 kgf·m, 17 lbf·ft)	

TROUBLESHOOTING

Hard to shift
- Improper clutch operation
- Improper oil viscosity
- Bent shift fork
- Bent shift fork shaft
- Bent fork claw
- Damaged shift drum cam groove
- Loose stopper plate bolt
- Damaged stopper plate and pin
- Damaged gearshift spindle

Transmission jumps out of gear
- Worn shift drum stopper arm
- Weak or broken shift arm return spring
- Loose stopper plate bolt
- Bent shift fork shaft
- Damaged shift drum cam groove
- Damaged or bent shift forks
- Worn gear engagement dogs or slots

Gearshift pedal will not return
- Weak or broken gearshift spindle return spring
- Bent gearshift spindle

DRIVE SPROCKET REMOVAL

Remove the following:

- Side cowl (page 2-8)
- Clutch slave cylinder (page 9-13)

Disconnect the vehicle speed sensor connector.
Remove the two SH bolts and vehicle speed sensor.

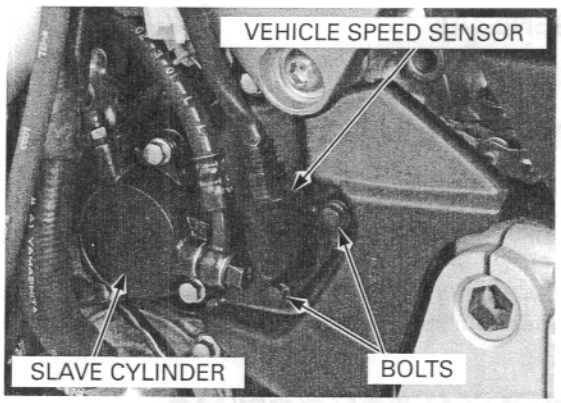

Remove the two SH bolts and drive sprocket cover.

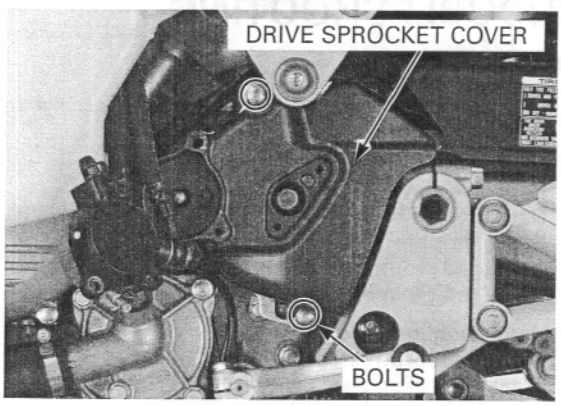

Remove the drive chain guide plate and dowel pins.

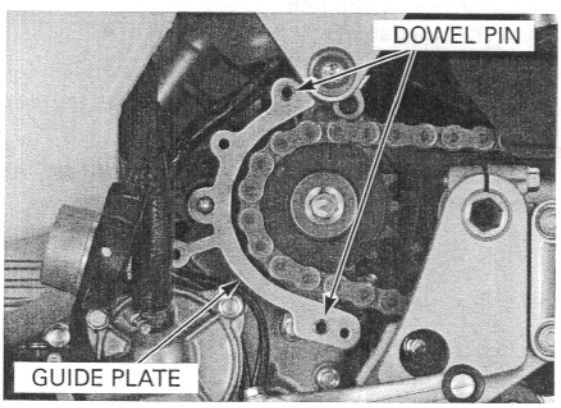

Shift the transmission into 6th gear and apply the rear brake.
Loosen and remove the drive sprocket bolt and washer.

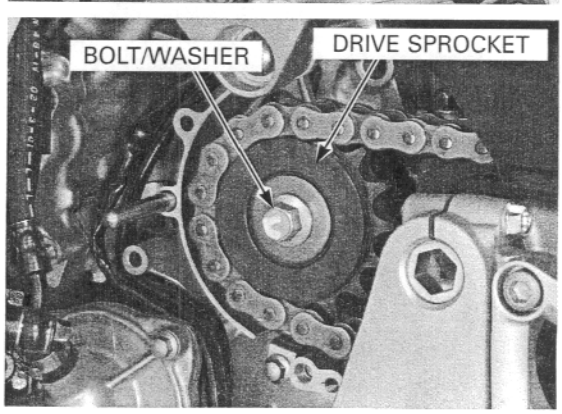

Loosen the drive chain by turning the rear axle bearing holder, then remove the drive sprocket from the countershaft.

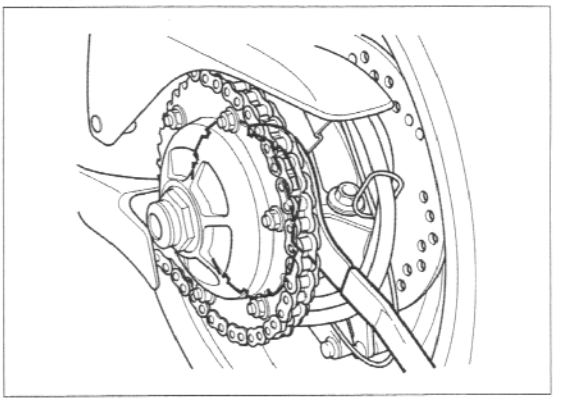

GEARSHIFT LINKAGE

REMOVAL

Drain the engine oil (page 3-14).

Remove the two water pump mounting SH bolts, then remove the water pump without disconnecting the water hoses.

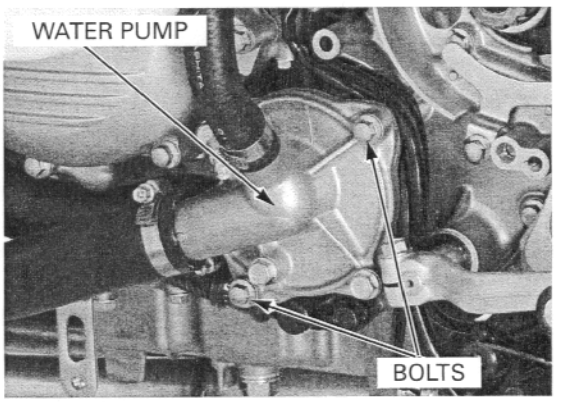

Remove the pinch bolt and gearshift pedal from the gearshift spindle.

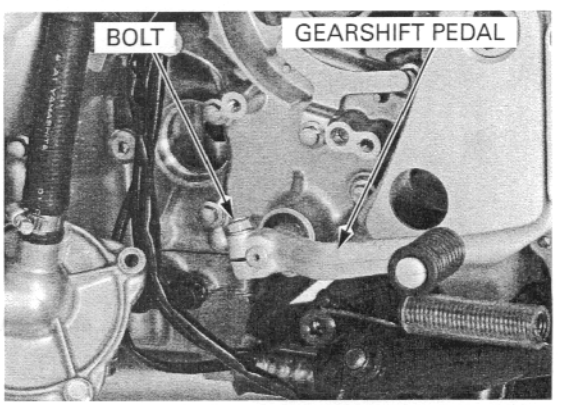

Remove the bolt and stopper plate.

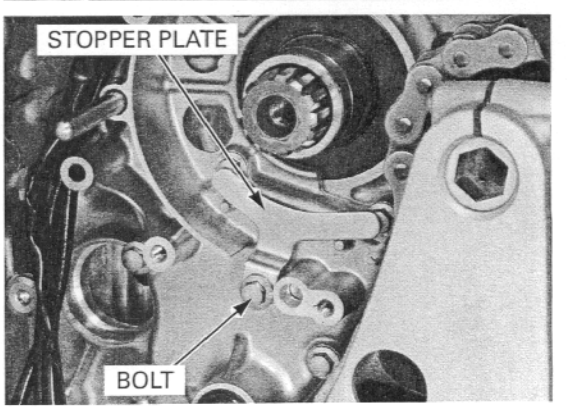

Before removing the gearshift linkage cover, clean any dirt around the gearshift spindle avoid damaging the dust seal.

Remove the six SH bolts and gearshift linkage cover.

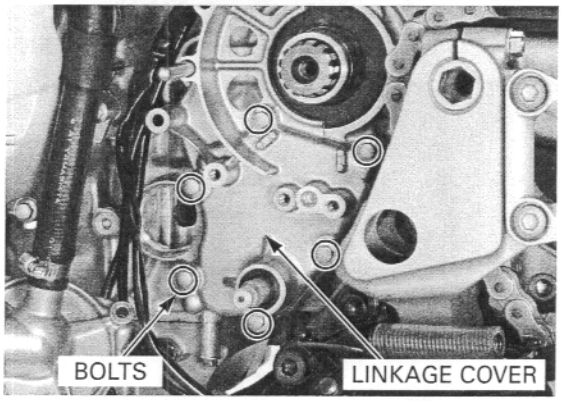

Remove the gasket and dowel pins.

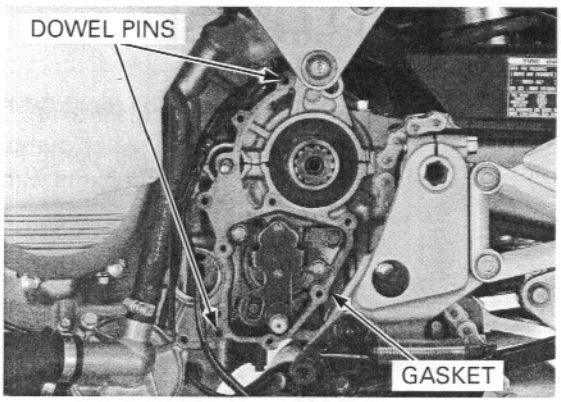

Remove the gearshift spindle and washers.

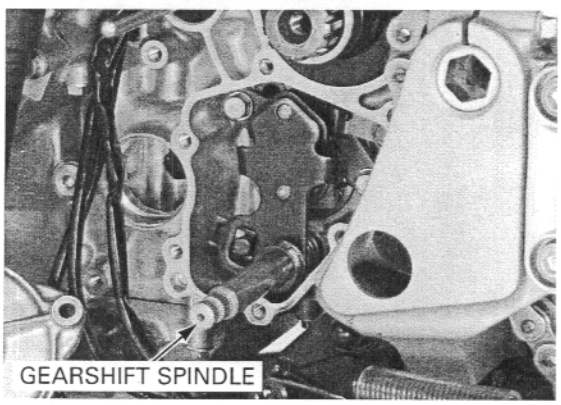

Remove the pivot bolt, shift drum stopper arm, washer and return spring.

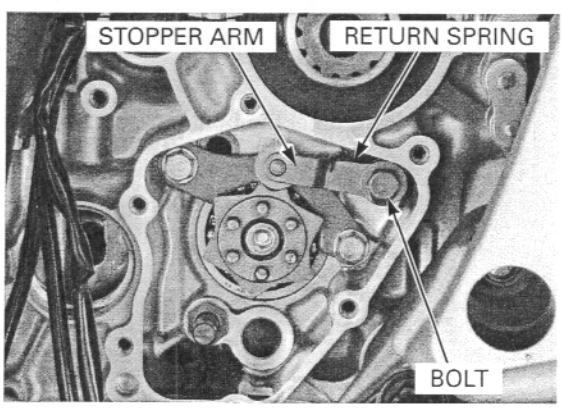

Remove the shift drum center socket bolt and shift drum center.

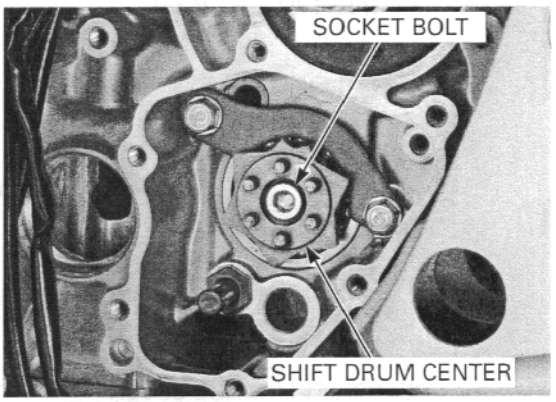

Remove the dowel pin from the shift drum.

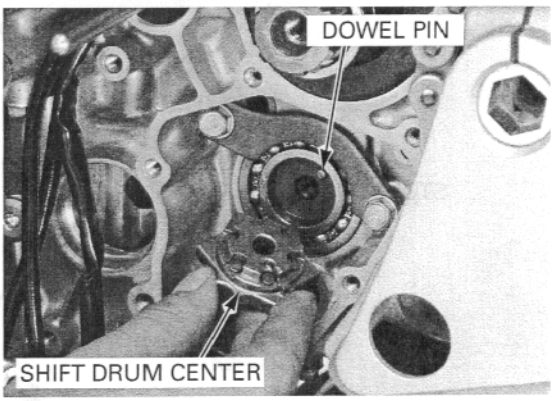

INSPECTION

Gearshift spindle

Check the gearshift spindle for wear, damage or bending.
Check the return spring for fatigue or damage.

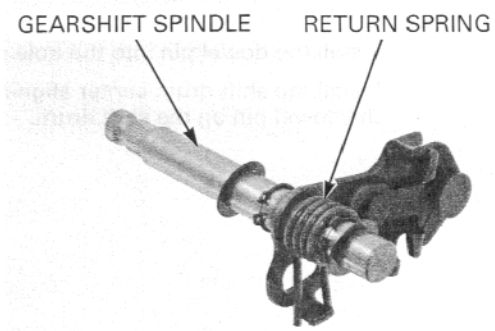

Dust seal/needle bearing

Check the needle bearing for wear or damage.
Check the dust seal for damage, replace if necessary.

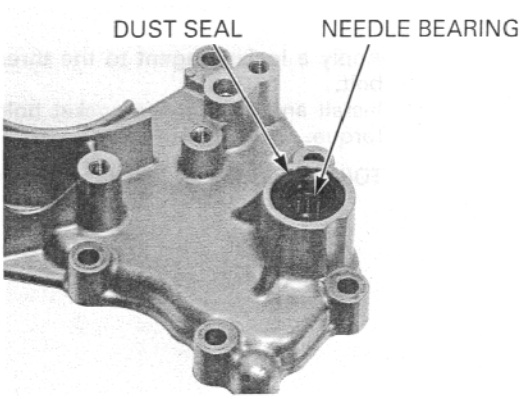

INSTALLATION

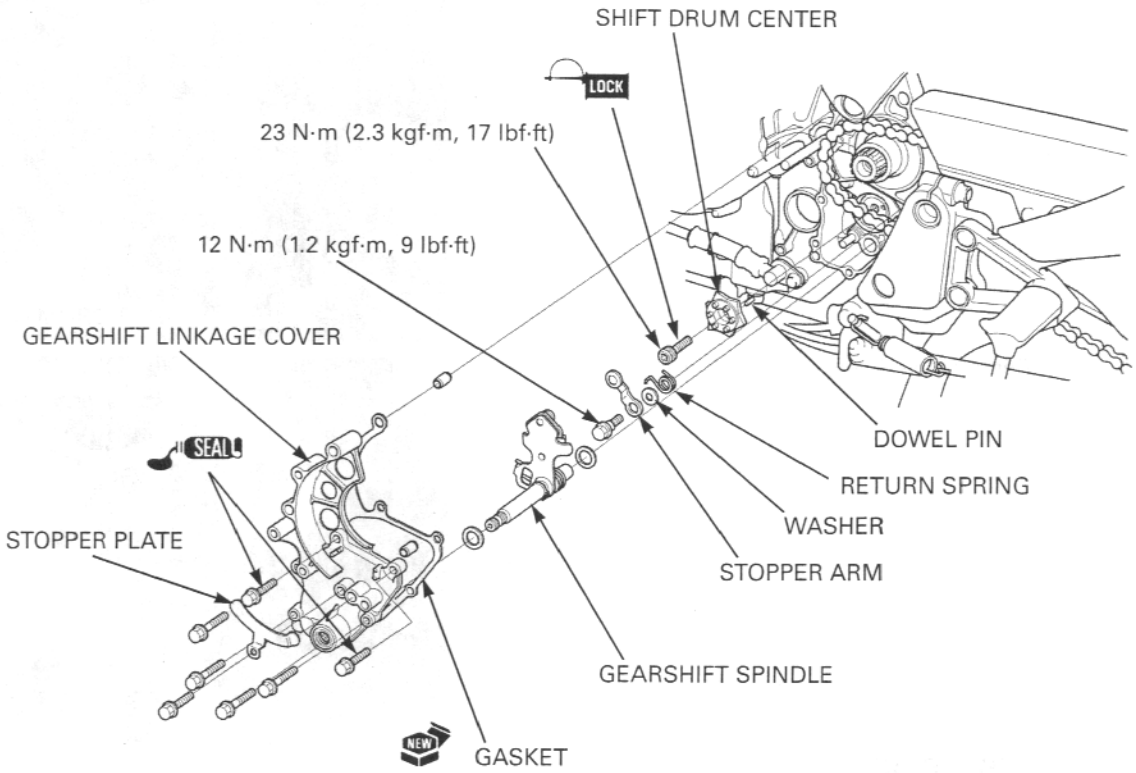

Install the dowel pin into the hole of the shift drum.

Install the shift drum center aligning its cut-out with the dowel pin on the shift drum.

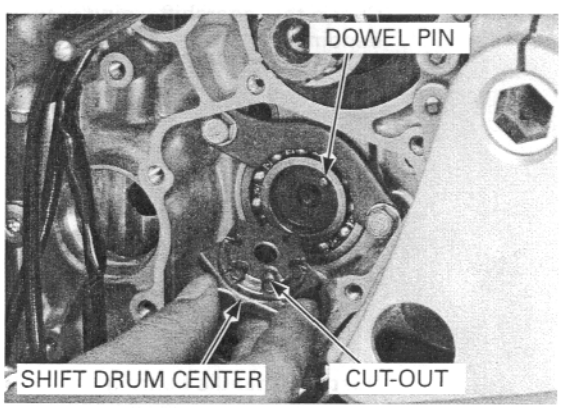

Apply a locking agent to the threads of the socket bolt.

Install and tighten the socket bolt to the specified torque.

TORQUE: 23 N·m (2.3 kgf·m, 17 lbf·ft)

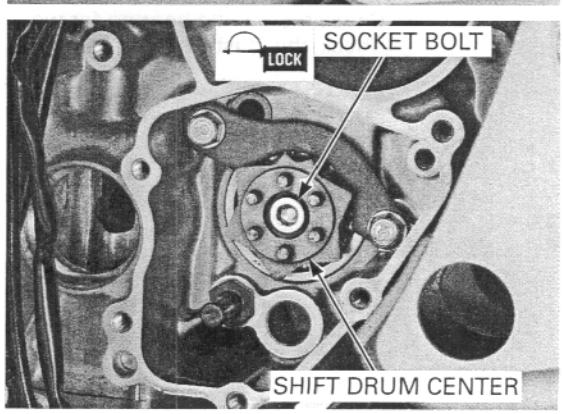

Install the return spring, washer, stopper arm and pivot bolt.

Tighten the pivot bolt to the specified torque.

TORQUE: 12 N·m (1.2 kgf·m, 9 lbf·ft)

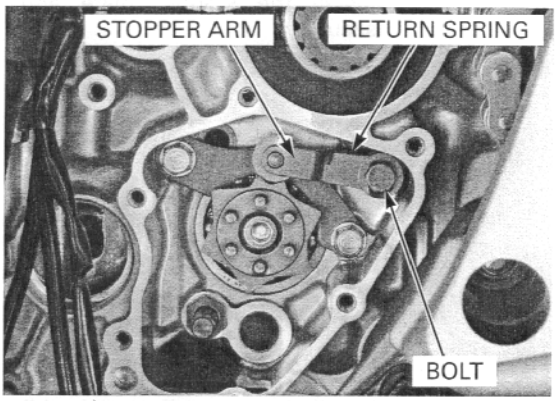

Install two washers onto the gearshift spindle.
Install the gearshift spindle aligning its return spring ends with the return spring pin onto the crankcase.

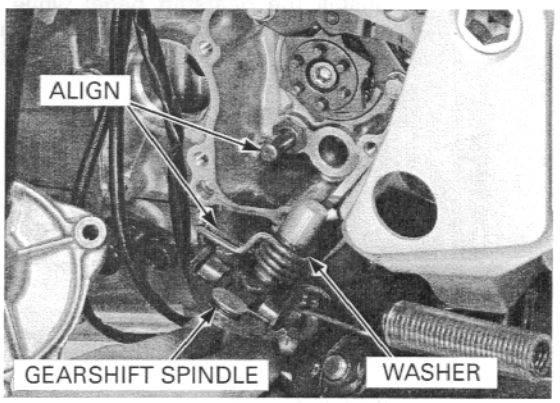

Install the dowel pin and new gasket.

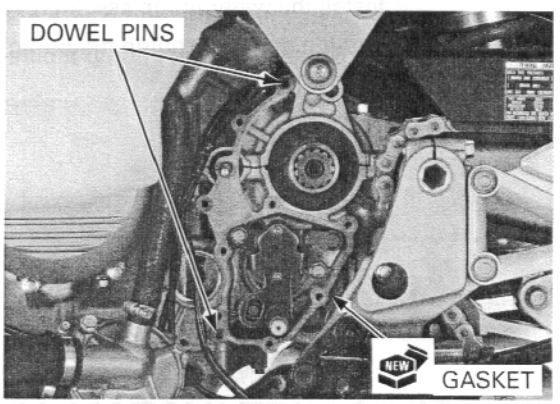

Install the gearshift linkage cover.
Apply sealant to the two 6 X 22 mm SH bolt threads.
Install the two 6 X 22 mm SH bolts and four 6 X 28 mm SH bolts.
Tighten the SH bolts securely.

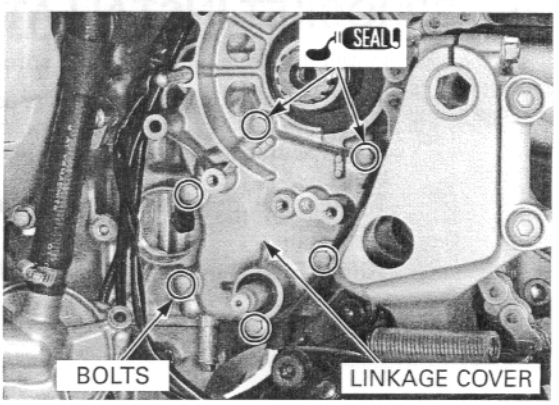

Install the stopper plate and tighten the bolt securely.

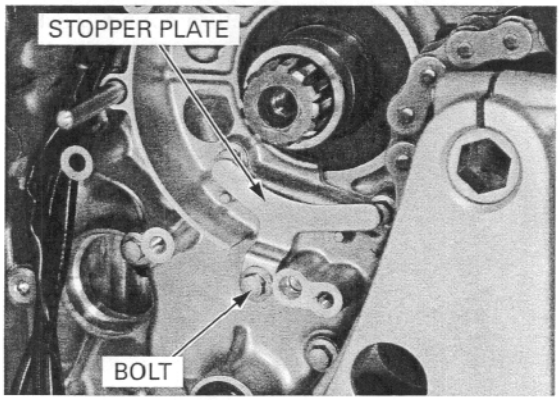

Install the gearshift pedal while aligning its split with the punch mark on the gearshift spindle.
Install and tighten the gearshift pedal bolt.

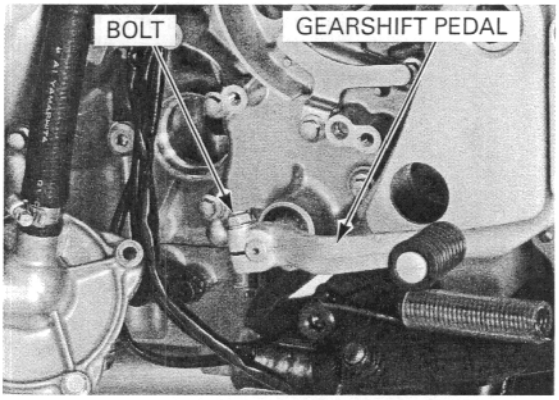

Install the water pump assembly (page 6-19).

Tighten the water pump mounting SH bolts.

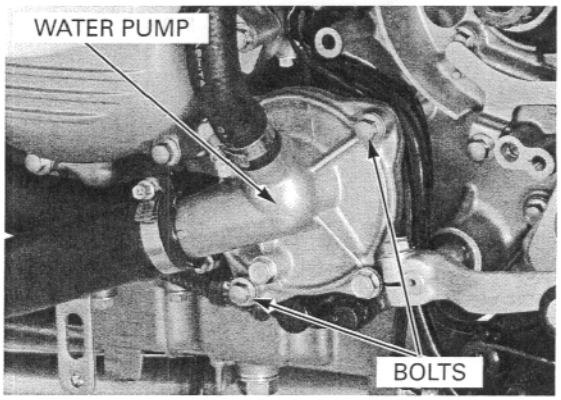

DRIVE SPROCKET INSTALLATION

Install the drive sprocket with its "530" mark facing out.

Install the drive chain over the sprocket.

Install the drive sprocket onto the countershaft.
Install the washer and drive sprocket bolt.
Shift the transmission into 6th gear and apply rear brake.
Tighten the drive sprocket bolt to the specified torque.

TORQUE: 51 N·m (5.2 kgf·m, 38 lbf·ft)

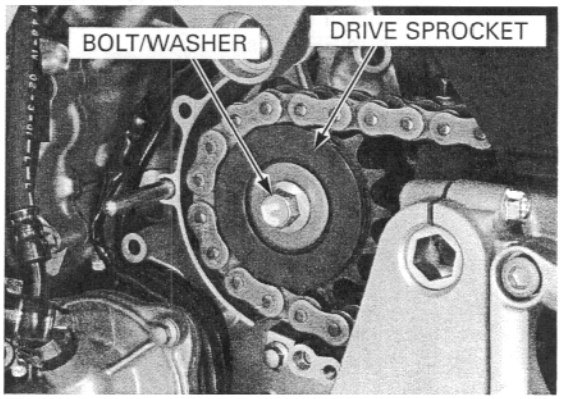

If the damper rubber in the drive sprocket cover is removed, install the damper rubber.
Apply a locking agent to the damper rubber bolt threads.
Install the washers and bolts, then tighten the bolts to the specified torque.

TORQUE: 12 N·m (1.2 kgf·m, 9 lbf·ft)

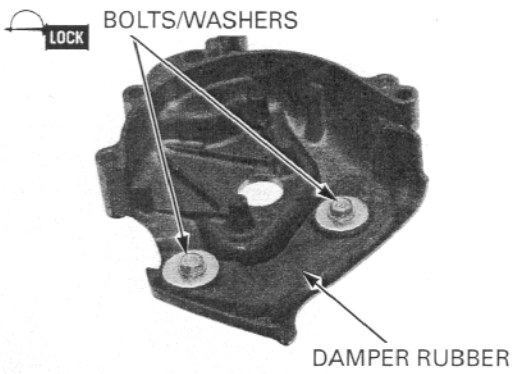

Check the drive chain guide plate for wear or damage, replace if necessary.

Install the dowel pins and drive chain guide plate.

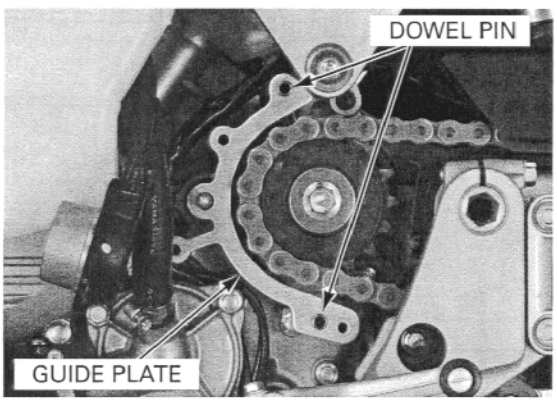

Install the drive sprocket cover and tighten the two SH bolts.

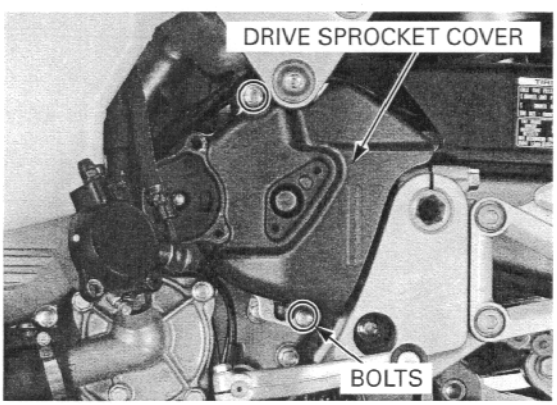

Install the clutch slave cylinder (page 9-13).

Install the vehicle speed sensor and tighten two SH bolts (page 20-12).
Connect the vehicle speed sensor connector.

Pour recommended engine oil (page 3-14).
Install the side cowl (page 2-10).

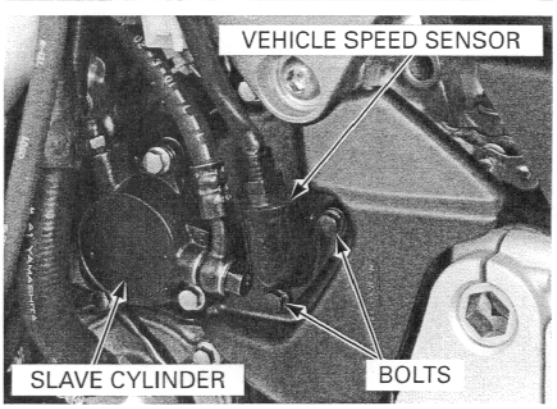

MEMO

11. CRANKCASE/TRANSMISSION

COMPONENT LOCATION 11-2

SERVICE INFORMATION 11-3

TROUBLESHOOTING 11-4

CRANKCASE SEPARATION 11-5

TRANSMISSION 11-6

CRANKCASE ASSEMBLY 11-13

COMPONENT LOCATION

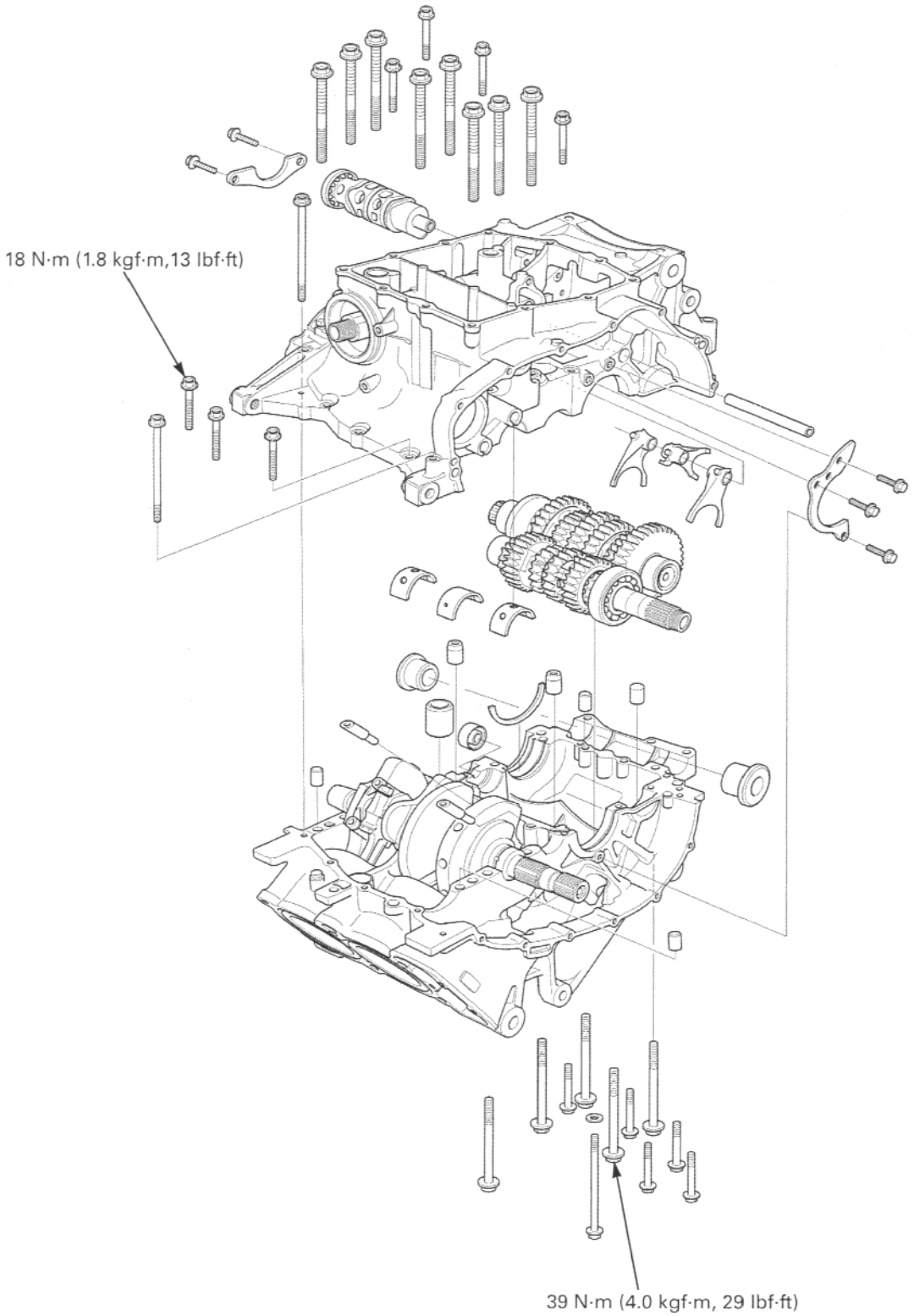

SERVICE INFORMATION

GENERAL

- The main journal 9 mm bolts are tightened using the Plastic Region Tightening Method.
- Always use new main journal 9 mm bolts (page 11-13).
- The main journal 9 mm bolt is pre-coated with an oil additive for axial tension stability. Do not remove the oil additive from the new 9 mm bolt surface.
- Must be follow the tightening procedure for crankcase bolt tightening (page 11-13).
- The crankcase must be separated to service the following:
  - Transmission
  - Crankshaft (page 12-4)
  - Piston/connecting rod (page 12-11)
- The following components must be removed before separating the crankcase:
  - Alternator (page 17-10) / flywheel (page 17-11)
  - Clutch (page 9-15)
  - Gearshift linkage (page 10-5)
  - Cylinder head (page 8-19)
  - Engine (page 7-5)
  - Oil pump (page 4-8)
  - Starter motor (page 19-6)
  - Water pump (page 6-18)
- Be careful not to damage the crankcase mating surfaces when servicing.
- Prior to assembling the crankcase halves, apply sealant to their mating surfaces, Wipe off excess sealant thoroughly.

SPECIFICATIONS

Unit: mm (in)

ITEM			STANDARD	SERVICE LIMIT
Transmission	Gear I.D.	M5, M6	28.000 – 28.021 (1.1024 – 1.1032)	28.04 (1.104)
		C1	26.007 – 26.028 (1.0239 – 1.0247)	26.04 (1.025)
		C2	31.000 – 31.025 (1.2205 – 1.2215)	31.04 (1.222)
		C3, C4	31.000 – 31.025 (1.2205 – 1.2215)	31.04 (1.222)
	Gear busing O.D.	M5, M6	27.959 – 27.980 (1.1007 – 1.1016)	27.94 (1.100)
		C2	30.970 – 30.995 (1.2193 – 1.2203)	30.95 (1.219)
		C3, C4	30.950 – 30.975 (1.2185 – 1.2195)	30.93 (1.218)
	Gear-to-bushing clearance	M5, M6	0.020 – 0.062 (0.0008 – 0.0024)	–
		C2	0.005 – 0.055 (0.0002 – 0.0022)	–
		C3, C4	0.025 – 0.075 (0.0010 – 0.0030)	–
	Gear bushing I.D.	M5	24.985 – 25.006 (0.9837 – 0.9845)	25.03 (0.985)
		C2	28.000– 28.021 (1.1024 – 1.1032)	28.04 (1.104)
	Mainshaft O.D.	at M5	24.959 – 24.980 (0.9826 – 0.9835)	24.95 (0.982)
	Countershaft O.D.	at C2	27.967 – 27.980 (1.1011 – 1.1016)	27.96 (1.101)
	Bushing-to-shaft clearance	M5	0.005 – 0.047 (0.0002 – 0.0019)	–
		C2	0.020 – 0.054 (0.0008 – 0.0021)	–
Shift fork, fork shaft	Fork I.D.		14.000 – 14.021 (0.5512 – 0.5520)	14.03 (0.552)
	Claw thickness		6.43 – 6.50 (0.253 – 0.256)	6.40 (0.252)
	Shift fork shaft O.D.		13.973 – 13.984 (0.5501 – 0.5506)	13.965 (0.5498)

TOEQUE VALUES

Crankcase bolt, 9 mm (Main journal)		See page page 11-13	Apply oil to the threads and seating surface
Crankcase bolt,	10 mm	39 N·m (4.0 kgf·m, 29 lbf·ft)	
	7 mm	18 N·m (1.8 kgf·m, 13 lbf·ft)	

TOOLS

Inner driver C	07746-0030100
Attachment, 25 mm I.D.	07746-0030200

TROUBLESHOOTING

Hard to shift
- Improper clutch operation (page 9-15)
- Incorrect transmission oil weight
- Bent shift fork
- Bent shift fork shaft
- Bent shift fork claw
- Damaged shift drum cam groove
- Bent gearshift spindle

Transmission jumps out of gear
- Worn gear dogs
- Worn gear shifter groove
- Bent shift fork shaft
- Broken shift drum stopper arm
- Broken shift drum stopper arm spring
- Worn or bent shift forks
- Broken gearshift spindle return spring

Excessive engine noise
- Worn or damaged transmission gear
- Worn or damaged transmission bearings

CRANKCASE SEPARATION

Refer to Service Information (page 11-3) for removal of necessary parts before separating the crankcase.

Remove the bolts and water hose joint from the upper crankcase.

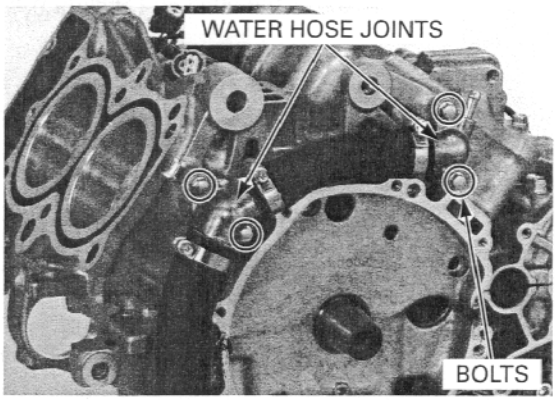

Disconnect the neutral switch connector from the switch.

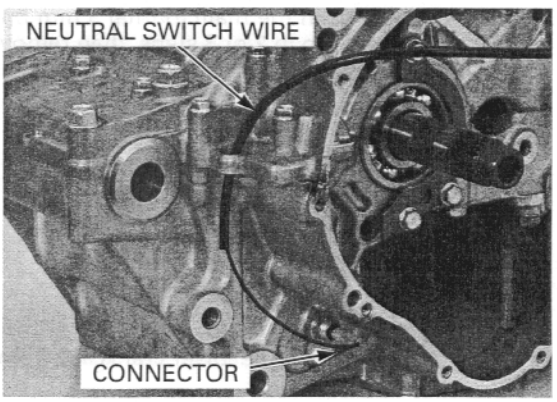

Remove the oil pressure switch terminal screw, then remove the engine sub-harness from the engine.

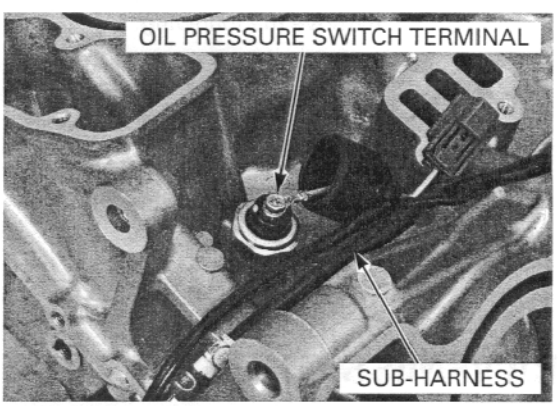

Remove the mainshaft bearing set plate bolts and plate.

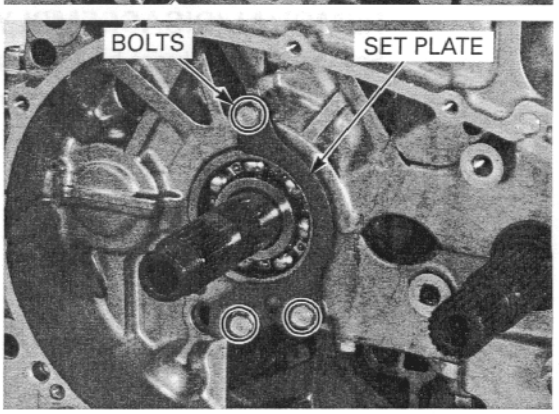

Loosen the six 6 mm bolts and five 10 mm bolts in a crisscross pattern in 2 or 3 steps.
Remove the bolts and sealing washer.

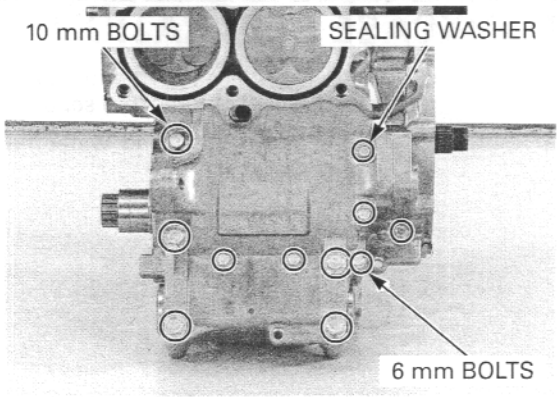

Remove the lower crankcase 6 mm bolts and 7 mm bolts.

Loosen the main journal 9 mm bolts in a crisscross pattern in 2 or 3 steps, then remove and discard the 9 mm bolts.

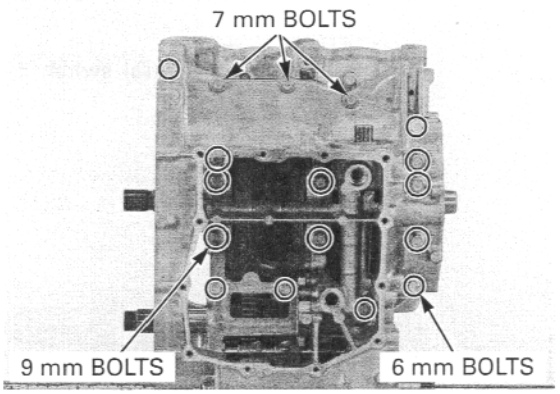

Separate the lower crankcase from the upper crankcase.

Remove the following:

- Swingarm pivot collars
- Dowel pins
- VTEC oil pass collar
- Oil orifices
- Transmission oil jets
- Mainshaft oil seal

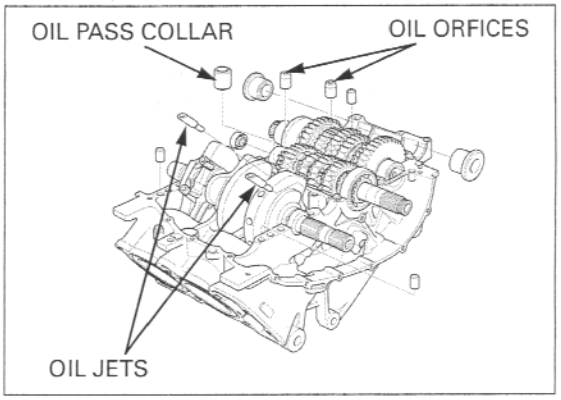

TRANSMISSION

REMOVAL/DISASSEMBLY

Separate the crankcase halves (page 11-5).

Remove the mainshaft and countershaft assemblies from the upper crankcase.

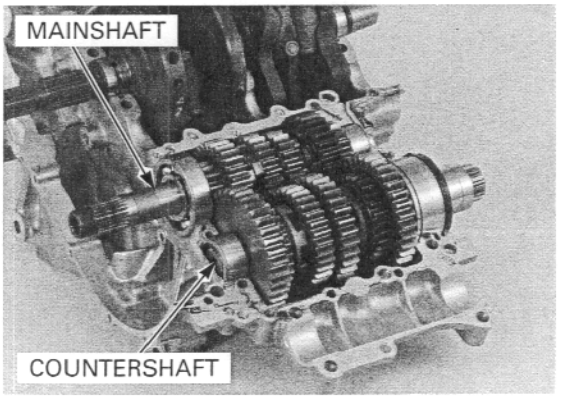

Remove the dowel pins and countershaft bearing set ring.

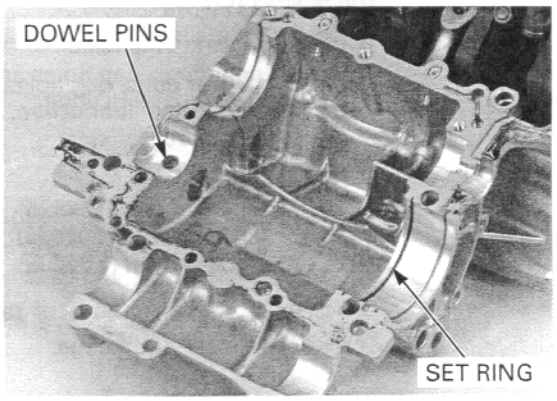

Remove the bolts and shift drum bearing set plate.

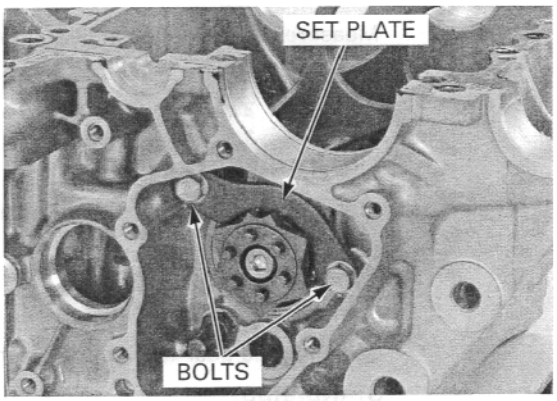

Remove the shift fork shaft and shift forks.

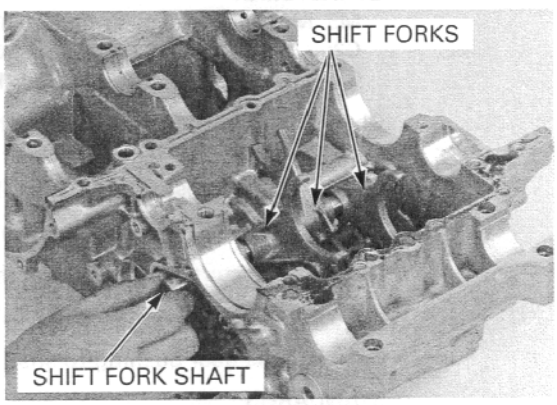

Remove the shift drum assembly.

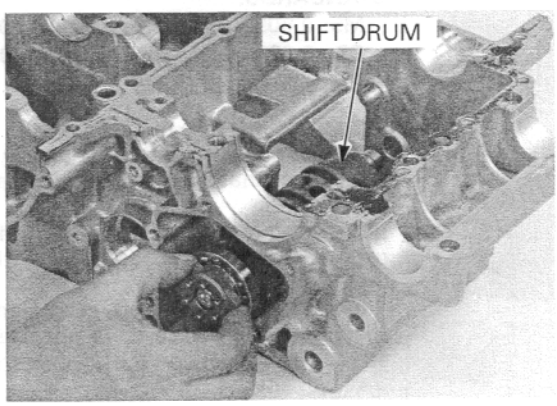

INSPECTION

Disassemble the mainshaft and countershaft.

Check the gear dogs, dog holes and teeth for abnormal wear or lack of lubrication.

Measure the I.D. of each gear.

SERVICE LIMITS:
M5, M6: 28.04 mm (1.104 in)
C1: 26.04 mm (1.025 in)
C2, C3, C4: 31.04 mm (1.222 in)

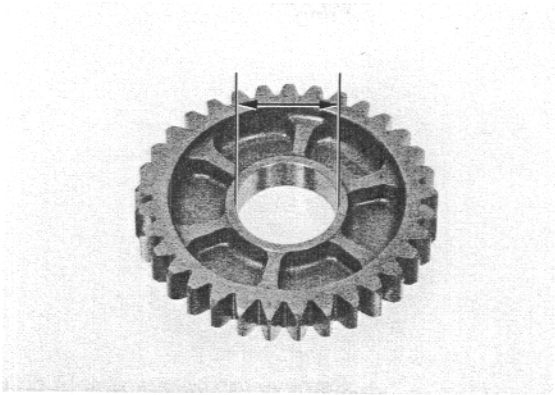

Check the shift fork groove of the shifter gear for excessive wear or damage.

Measure the O.D. of each gear bushing.

SERVICE LIMITS:
M5, M6: 27.94 mm (1.100 in)
C2: 30.95 mm (1.219 in)
C3, C4: 30.93 mm (1.218 in)

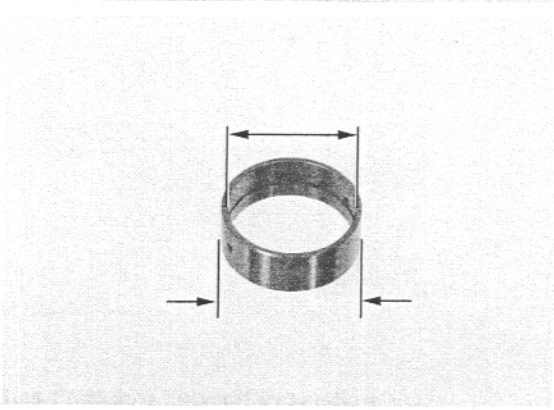

Measure the I.D. of each gear bushing.

SERVICE LIMITS:
M5: 25.03 mm (0.985 in)
C2: 28.04 mm (1.104 in)

Calculate the gear-to-bushing clearance.

STANDARDS:
M5, M6: 0.020 – 0.062 mm (0.0008 – 0.0024 in)
C2: 0.005 – 0.055 mm (0.0002 – 0.0022 in)
C3, C4: 0.025 – 0.075 mm (0.0010 – 0.0030 in)

Check the mainshaft and countershaft for abnormal wear or damage.

Measure the mainshaft O.D. at the M5 gear.

SERVICE LIMIT: 24.95 mm (0.982 in)

Measure the countershaft O.D. at the C2 gear.

SERVICE LIMIT: 27.96 mm (1.101 in)

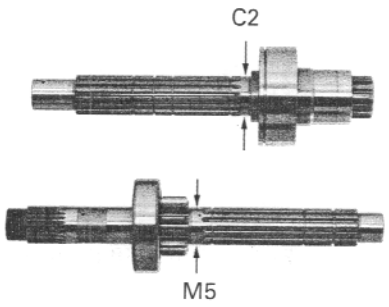

Calculate the gear bushing-to-shaft clearance.

STANDARDS:
M5: 0.005 – 0.047 mm (0.0002 – 0.0019 in)
C2: 0.020 – 0.054 mm (0.0008 – 0.0021 in)

Turn the outer race of each bearing with your finger. The bearings should turn smoothly and quietly.
Also check that the bearing inner race fits tightly on the shaft.
Remove and discard the mainshaft bearing, if the race does not turn smoothly, quietly, or fits loosely on the mainshaft.
Replace the countershaft, collar, and bearing as an assembly, if the race does not turn smoothly, quietly, or fits loosely on the countershaft.

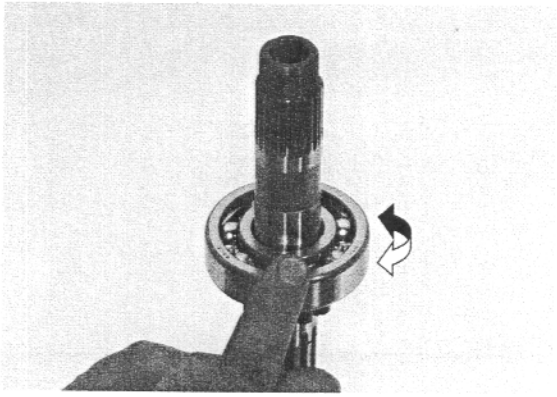

Mainshaft bearing replacement

Press out the mainshaft from the bearing using a hydraulic press.

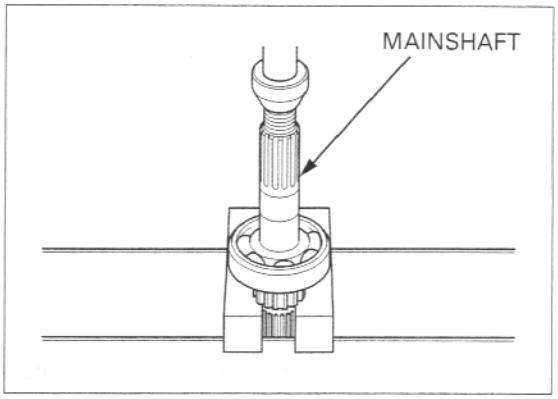

Install with the groove side facing up.

Install a new mainshaft bearing onto the mainshaft by pressing the mainshaft bearing inner race using the special tools.

TOOLS:

Inner driver C	**07746-0030100**
Attachment, 25 mm I.D.	**07746-0030200**

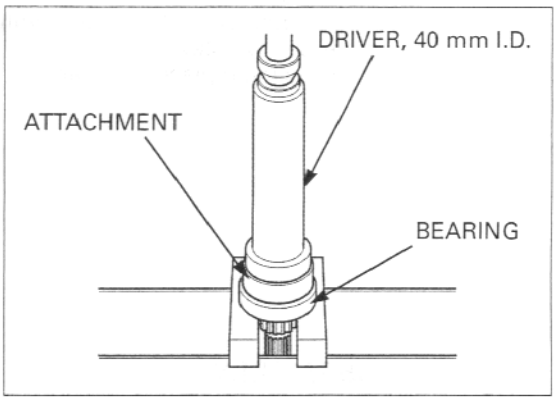

Check the shift fork guide pin for abnormal wear or damage

Measure the shift fork I.D.

SERVICE LIMIT: 14.03 mm (0.552 in)

Measure the shift fork claw thickness.

SERVICE LIMIT: 6.40 mm (0.252 in)

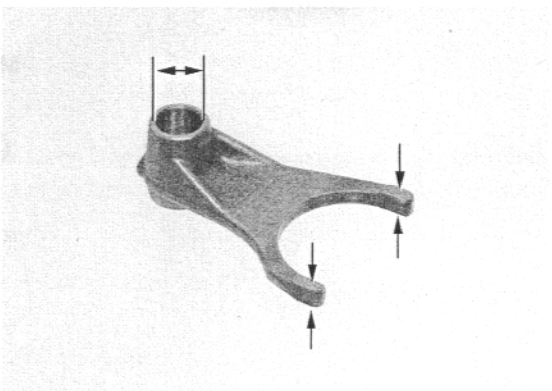

Measure the shift fork shaft O.D.

SERVICE LIMIT: 13.965 mm (0.5498 in)

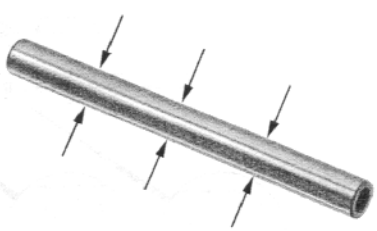

Inspect the shift drum grooves for wear or damage.

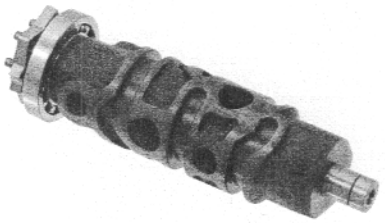

Turn the outer race of the shift drum bearing with your finger.
The bearing should turn smoothly and freely without excessive play.
If necessary, replace the bearing.

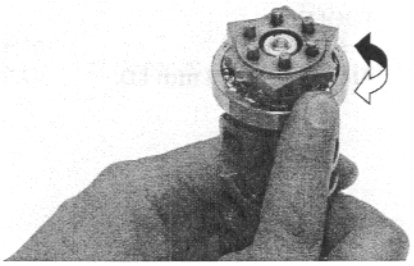

ASSEMBLY

Mainshaft:

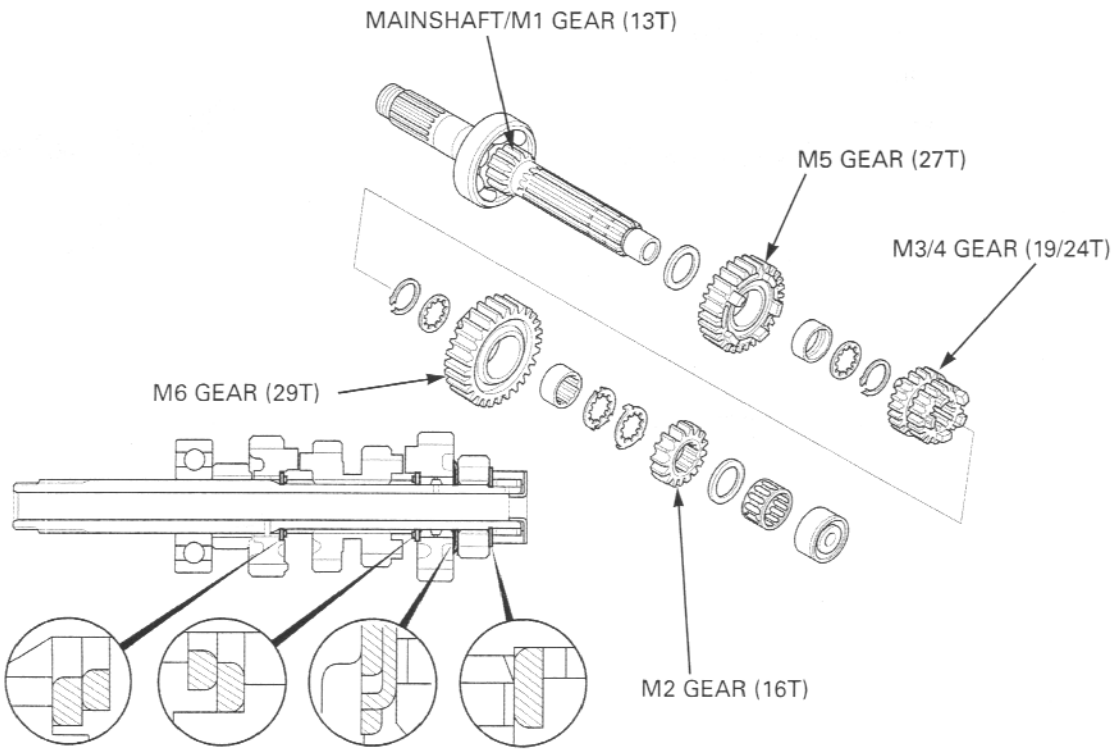

Countershaft:

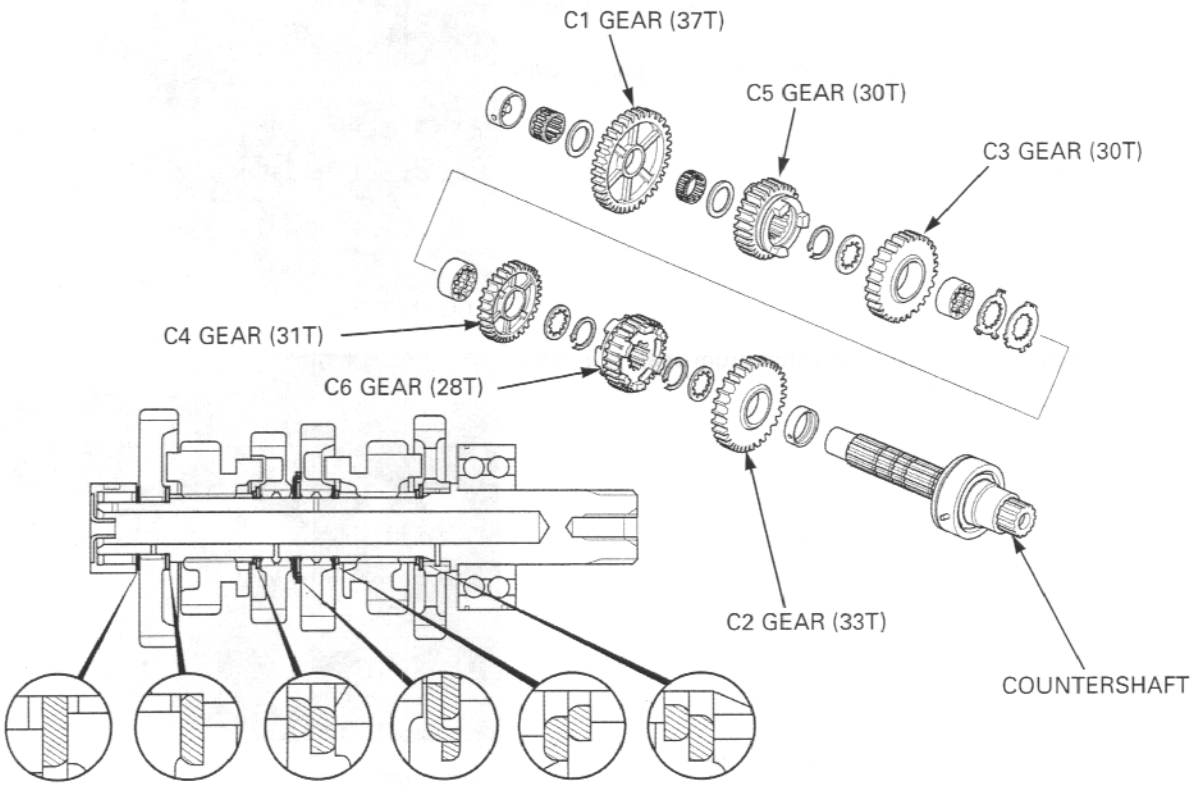

Assemble the transmission gear and shafts.
Coat each gear with clean engine oil and check for smooth movement.

Apply molybdenum disulfide oil to the shift fork grooves in the M3/4, C5 and C6 gear.

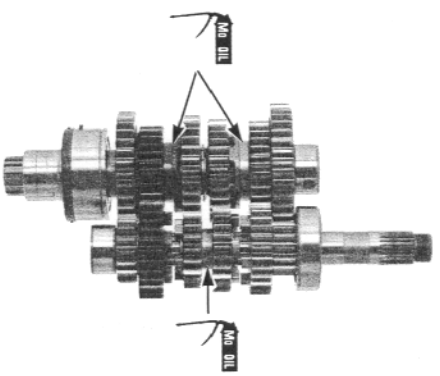

INSTALLATION

Install the dowel pins in the upper crankcase holes.
Install the countershaft bearing set ring into the upper crankcase groove.

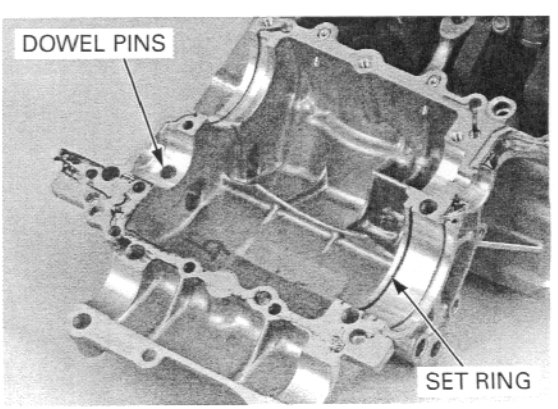

Install the mainshaft and countershaft by aligning the countershaft bearing groove with the set ring on the crankcase, and aligning the bearing cap holes with the dowel pins.

Also align the countershaft bearing stopper pin with the groove in the crankcase.

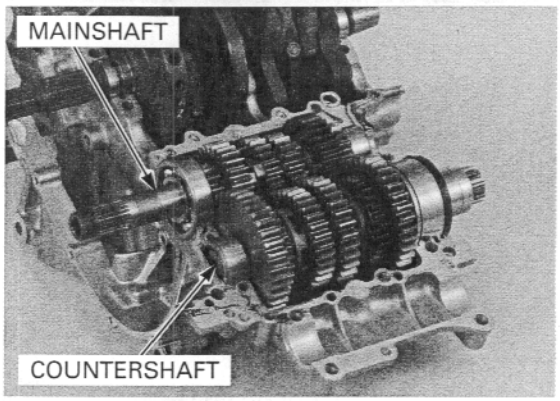

Install the shift drum and shift drum bearing into the lower crankcase.

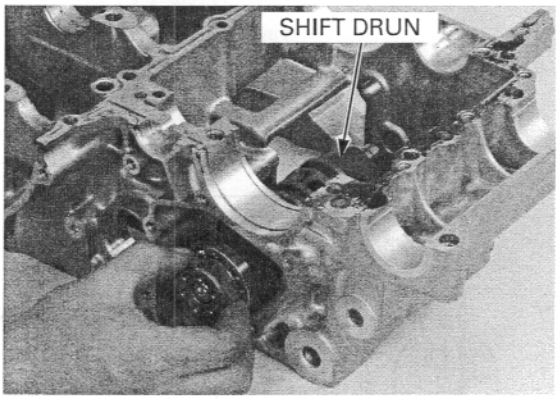

The shift forks have location marks.

- "R" for right
- "C" for center
- "L" for left

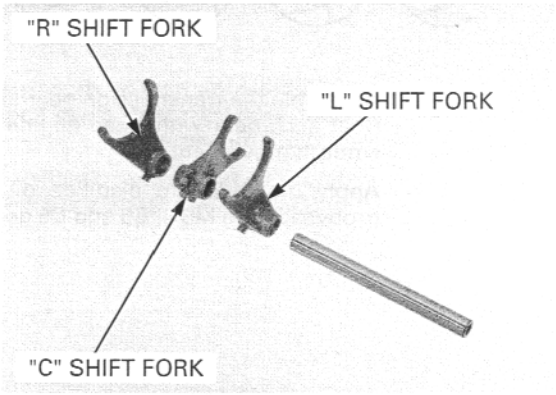

Face the shift fork identification marks to the clutch side.

Install the shift forks and shift fork shaft.

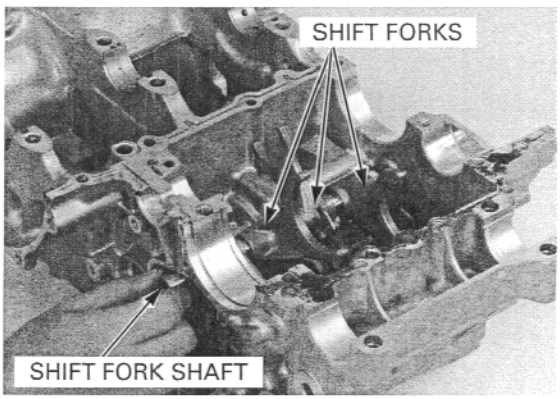

Apply a locking agent to the shift drum bearing set plate bolt threads.
Install the shift drum bearing set plate and tighten the bolts securely.

Assemble the crankcase halves (page 11-13).

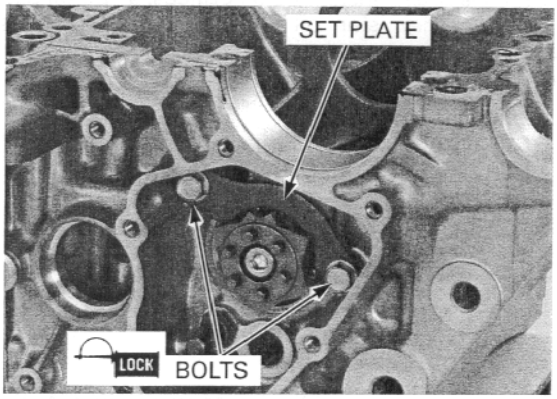

CRANKCASE ASSEMBLY

Apply a light, but thorough, coating of liquid sealant to the crankcase mating surface except to the main bearing journal bolt (lower crankcase bolt, 9 mm) area and the oil passage area as shown.

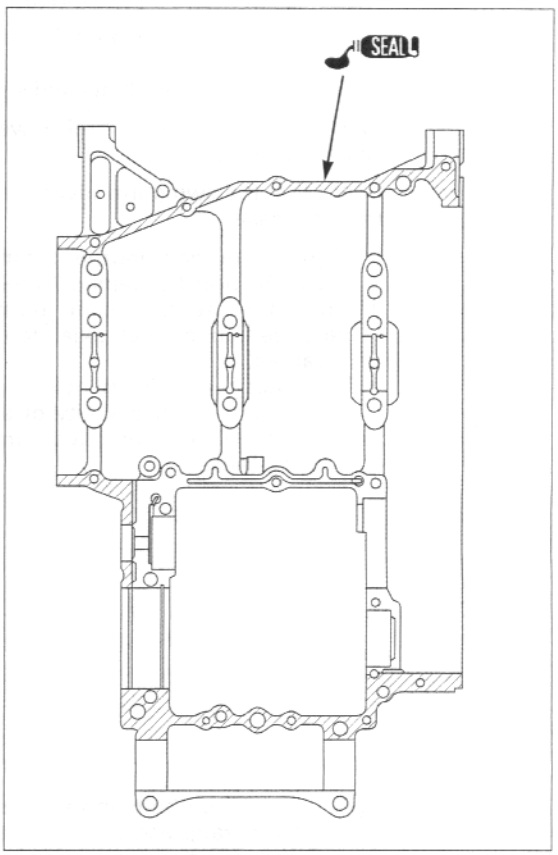

Install the two 10 X 16 mm dowel pins and 8 X 14 mm dowel pin.
Install the swingarm pivot collars.

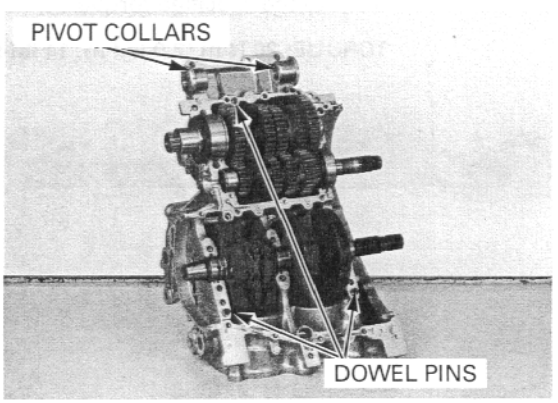

Install the oil orifices with their large I.D. side facing the upper crankcase.

Install the oil orifices, VTEC oil pass collar, transmission oil jets and mainshaft oil seal in the upper crankcase.

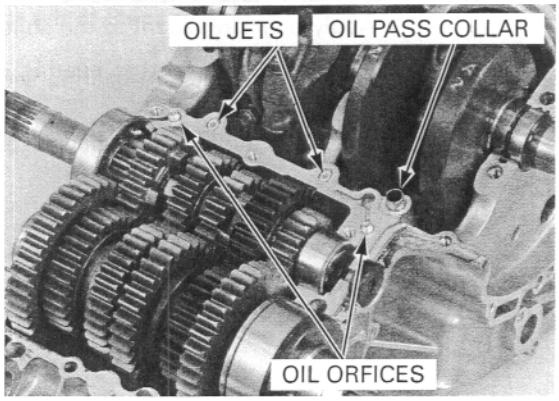

Install the lower crankcase onto the upper crankcase by aligning the shift forks onto their proper grooves on the mainshaft and countershaft shifter gears.

Install the new 9 mm bolts into main journal bolt holes.
Install the three 7 mm bolts and six 6 mm bolts.

Make sure the upper and lower crankcase are seated securely.

Check that the swingarm pivot collars are seated in the crankcase.

- Tighten the main journal 9 mm bolts using the Plastic Region Tightening Method.
- Do not reuse the main journal 9 mm bolts, because the correct axial tension will not be obtained.
- The main journal 9 mm bolts are pre-coated with an oil additive for stability of axial tension. Do not remove the oil additive from the new 9 mm bolts surfaces.

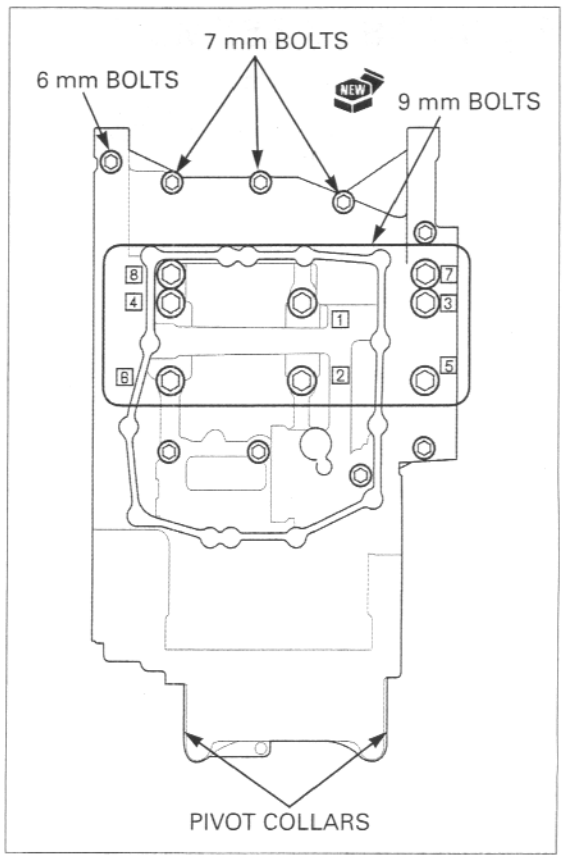

Tighten the 9 mm bolts in the numerical order cast on the lower crankcase in several steps, then tighten them to the specified torque.

TORQUE: 20 N·m (2.0 kgf·m, 14 lbf·ft)

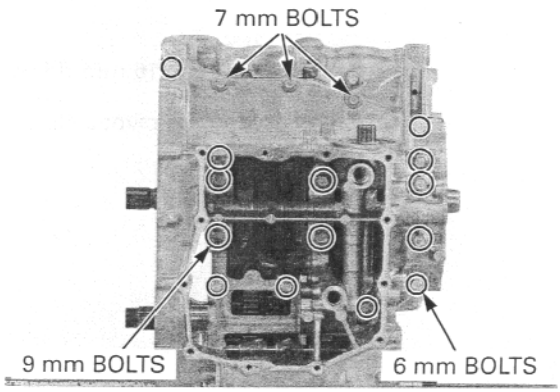

Further tighten the 9 mm bolts 90 degrees in the numerical order case on the lower crankcase.

Tighten the lower crankcase 6 mm bolts and 7 mm bolts in a crisscross pattern in several steps (page 11-14).

TORQUE: 7 mm bolt: 18 N·m (1.8 kgf·m, 13 lbf·ft)

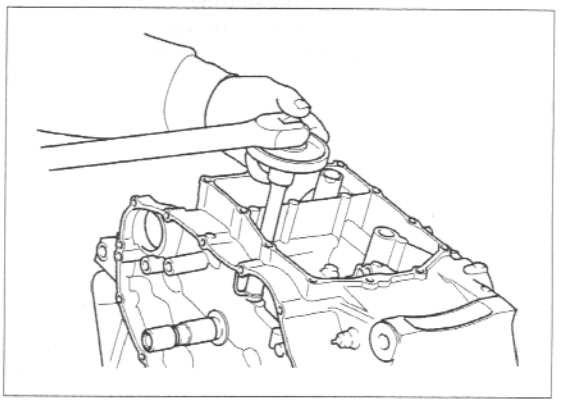

Recheck that the swingarm pivot collars are seated in the crankcase.
Install the upper crankcase 10 mm bolts.

The sealing washer location is indicated on the upper crankcase using the "△" mark.

Install a new sealing washer and 6 mm bolts.

Tighten the 10 mm bolts to the specified torque.

TORQUE: 39 N·m (4.0 kgf·m, 29 lbf·ft)

Tighten the 6 mm bolts in a crisscross pattern in 2 or 3 steps.

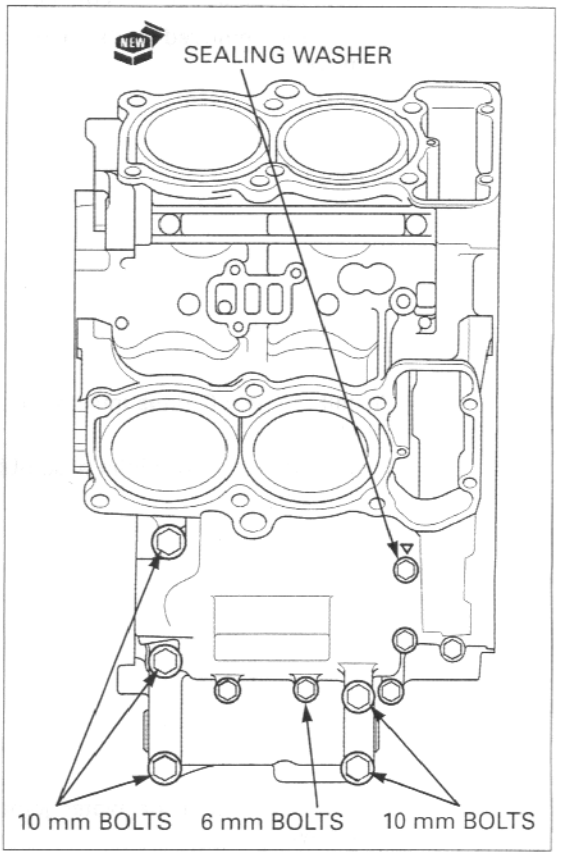

Install the mainshaft bearing set plate.
Apply a locking agent to the set plate bolt threads.
Install and tighten the bolts.

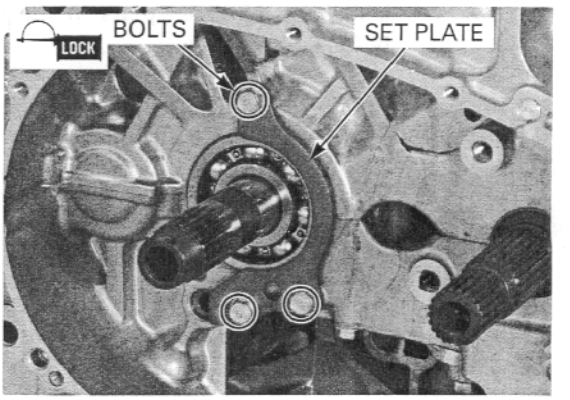

Route the engine sub-harness, install the oil pressure switch terminal to the switch.
Tighten the oil pressure switch terminal screw.

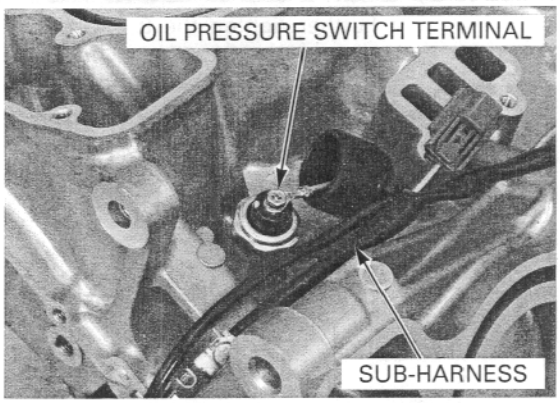

Install the neutral switch connector.

Install the removed parts in the reverse order of removal.

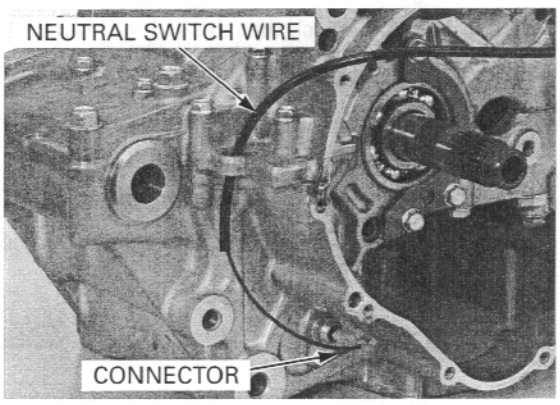

Install the new O-rings into the groove of the water joints.

Install the water hose joint assembly onto the upper crankcase.

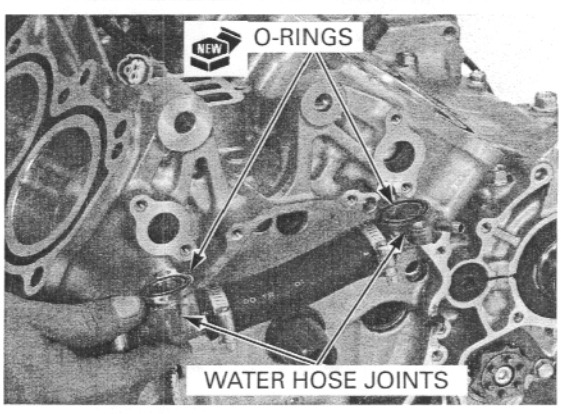

Install and tighten the water joint mounting bolts securely.

Install the removed parts in the reverse order of removal.

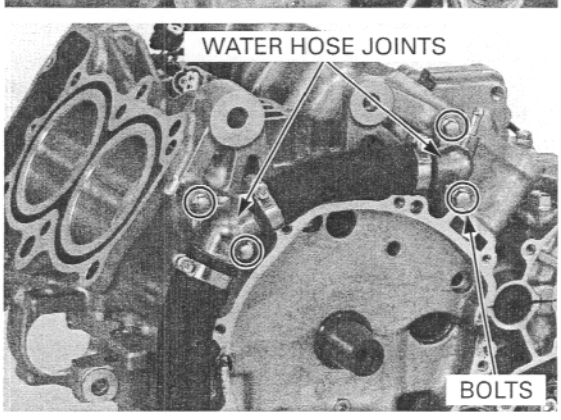

12. CRANKSHAFT/PISTON/CYLINDER

COMPONENT LOCATION 12-2

SERVICE INFORMATION 12-3

TROUBLESHOOTING 12-3

CRANKSHAFT 12-4

MAIN JOURNAL BEARING 12-6

CRANKPIN BEARING 12-9

PISTON/CYLINDER 12-11

COMPONENT LOCATION

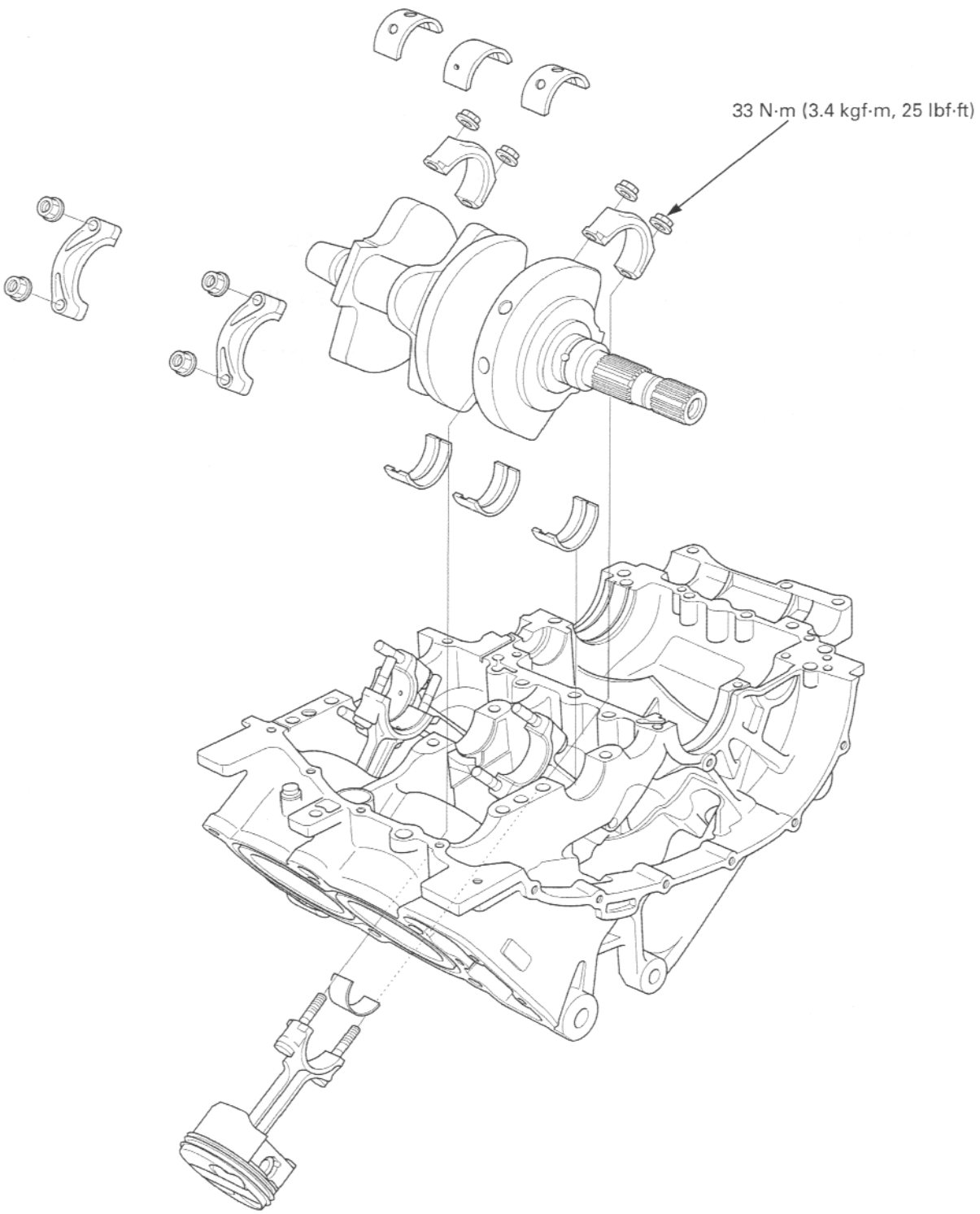

SERVICE INFORMATION

GENERAL

- The crankcase must be separated to service the crankshaft and piston/connecting rod. Refer to procedures for crankcase separation (page 11-5) and assembly (page 11-13).
- Mark and store the connecting rods, bearing caps, pistons and bearing inserts to be sure of their correct locations for reassembly.
- The crankpin and main journal bearing inserts are select fit and are identified by color codes. Select replacement bearings from the code tables. After selecting new bearings, recheck the oil clearance with a plastigauge. Incorrect oil clearance can cause major engine damage.

SPECIFICATIONS

Unit: mm (in)

ITEM			STANDARD	SERVICE LIMIT
Crankshaft	Connecting rod side clearance		0.10 – 0.30 (0.004 – 0.012)	0.40 (0.016)
	Runout		–	0.05 (0.002)
	Main journal bearing oil clearance		0.019 – 0.037 (0.0007 – 0.0015)	0.05 (0.002)
Cylinder	I.D,		72.000 – 72.015 (2.8346 – 2.8352)	72.10 (2.839)
	Out of round		–	0.10 (0.004)
	Taper		–	0.10 (0.004)
	Warpage		–	0.10 (0.004)
Piston, piston rings	Piston O.D. at 18 mm (0.7 in) from bottom		71.965 – 71.985 (2.8333 – 2.8340)	71.90 (2.831)
	Piston pin bore I.D.		17.002 – 17.008 (0.6694 – 0.6696)	17.02 (0.670)
	Piston pin O.D.		16.994 – 17.000 (0.6691 – 0.6693)	16.98 (0.669)
	Piston -to-piston pin clearance		0.002 – 0.014 (0.0001 – 0.0006)	0.04 (0.002)
	Piston ring end gap	Top	0.20 – 0.30 (0.008 – 0.012)	0.5 (0.02)
		Second	0.30 – 0.45 (0.012 – 0.018)	0.6 (0.02)
		Oil (side rail)	0.20 – 0.70 (0.008 – 0.028)	0.9 (0.04)
	Piston ring-to-ring groove clearance	Top	0.030 – 0.065 (0.0012 – 0.0026)	0.11 (0.004)
		Second	0.015 – 0.050 (0.0006 – 0.0020)	0.10 (0.004)
Cylinder-to-piston clearance			0.015 – 0.050 (0.0006 – 0.0022)	0.10 (0.004)
Connecting rod small end I.D.			17.016 – 17.034 (0.6699 – 0.6706)	17.04 (0.671)
Connecting rod-to-piston pin clearance			0.016 – 0.040 (0.0006 – 0.0016)	0.06 (0.002)
Crankpin bearing oil clearance			0.030 – 0.052 (0.0012 – 0.0020)	0.08 (0.003)

TOEQUE VALUES

Connecting rod bearing cap nut	33 N·m (3.4 kgf·m, 25 lbf·ft)	Apply oil to the threads and seating surface

TROUBLESHOOTING

Cylinder compression is too low, hard to starting or poor performance at low speed
- Leaking cylinder head gasket
- Worn, stuck or broken piston ring
- Worn or damaged cylinder and piston

Cylinder compression too high, overheats or knocks
- Carbon deposits on the cylinder head and/or piston crown

Excessive smoke
- Worn cylinder, piston or piston ring
- Improper installation of piston rings
- Scored or scratched piston or cylinder wall

Abnormal noise
- Worn piston pin or piston pin hole
- Worn connecting rod small end
- Worn cylinder, piston or piston rings
- Worn main journal bearings
- Worn crankpin bearings

Engine vibration
- Excessive crankshaft runout

CRANKSHAFT

SIDE CLEARANCE INSPECTION

Separate the crankcase halves (page 11-5).

Measure the connecting rod side clearance.

SERVICE LIMIT: 0.40 mm (0.016 in)

If the clearance exceeds the service limit, replace the connecting rod.
Recheck and if still out of limit, replace the crankshaft.

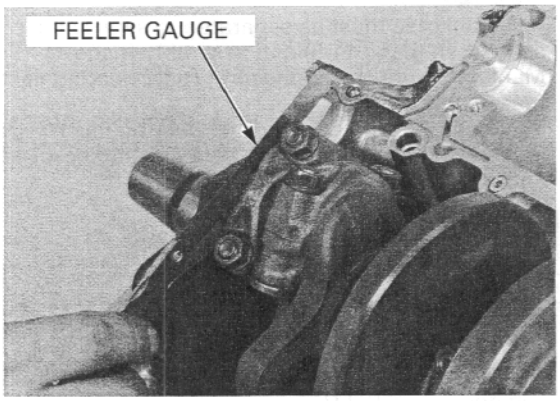

REMOVAL

Separate the crankcase halves (page 11-5).

Mark the bearing caps and bearings as you remove them to indicate the correct cylinder for reassembly.

Be careful not to damage the crankpin, main journal and bearing inserts.

Remove the connecting rod bearing cap nuts and bearing caps.
Tap the side of the cap lightly if the bearing cap is hard to remove.

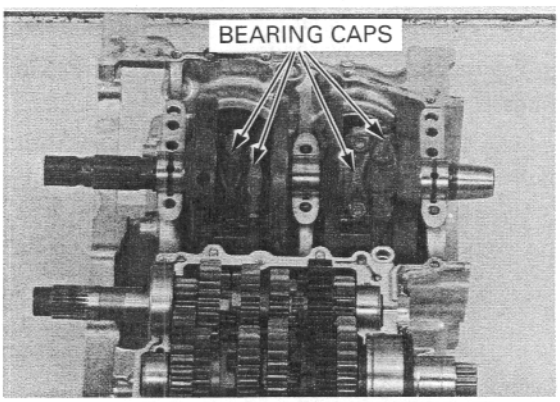

NOTICE

Before removal, position all the pistons at TDC (Top Dead Center) to prevent damaging the crankpin with the connecting rod bolt threads.

Remove the crankshaft.

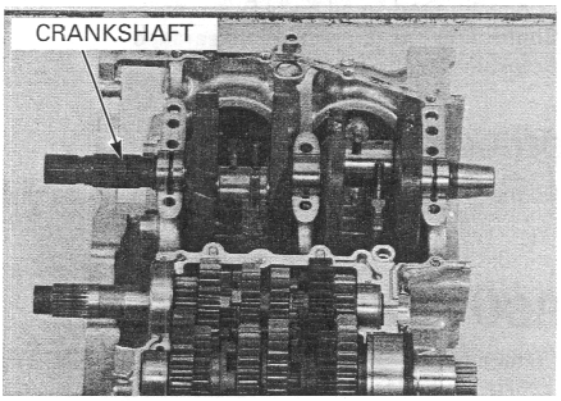

Remove the main journal bearings from both the crankcases.

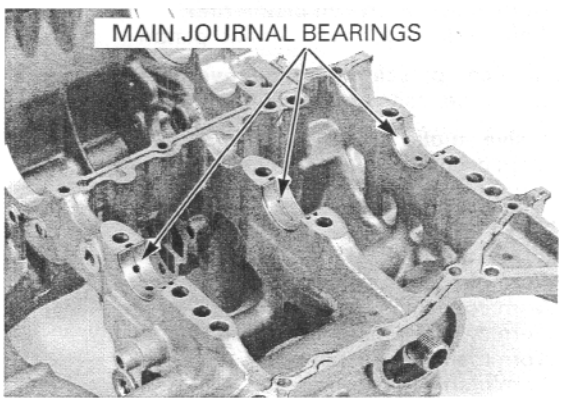

INSPECTION

Hold the crankshaft both end.
Set a dial gauge on the center main journal of the crankshaft.
Rotate the crankshaft two revolutions and read the runout.

SERVICE LIMIT: 0.05 mm (0.002 in)

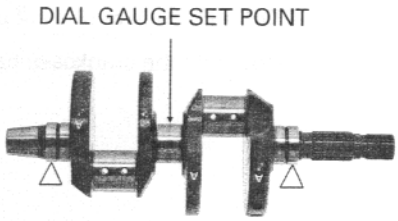

INSTALLATION

The bearing tabs should be aligned with the grooves in the case.

Install the main journal bearings into the upper and lower crankcase.

Apply molybdenum disulfide oil to the upper and lower main journal bearings.

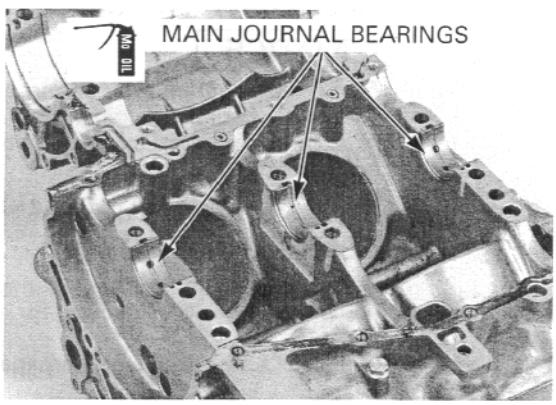

Install the crankshaft.

NOTICE

Before installation, position all the pistons at TDC (Top Dead Center) to prevent damaging the crankpin with the connecting rod bolt threads.

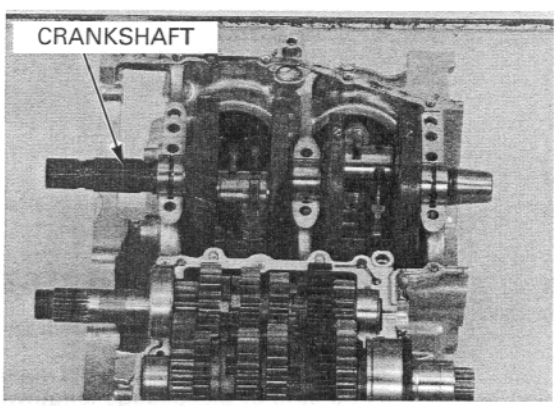

Apply molybdenum oil solution to the crankpin bearing sliding surfaces on the bearing caps.

Install the bearing caps by aligning the I.D. code on the connecting rod and bearing cap.

Apply oil to the connecting rod bearing cap nut threads and seating surface.

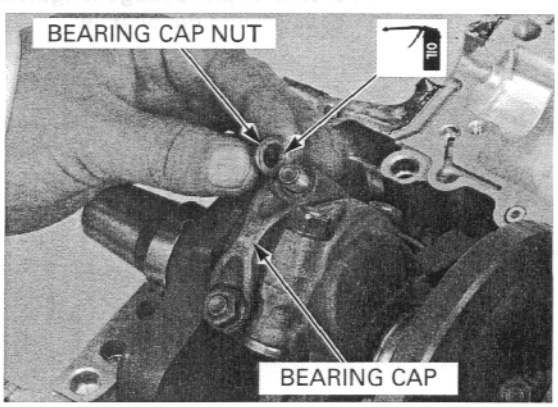

Tighten the bearing cap nuts alternately 2 or 3 steps, then tighten them to the specified torque.

TORQUE: 33 N·m (3.4 kgf·m, 25 lbf·ft)

Assemble the crankcase halves (page 11-13).

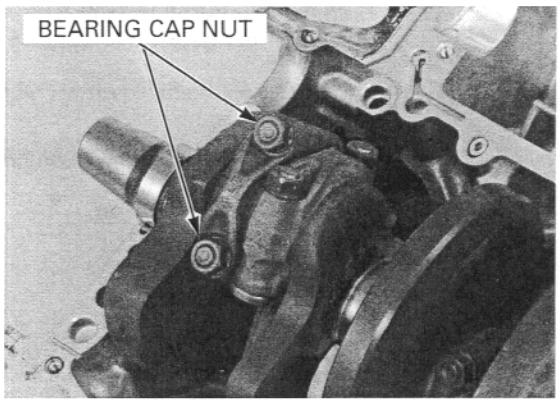

MAIN JOURNAL BEARING

NOTICE

Do not interchange the bearing inserts. They must be installed in their original locations or the correct bearing oil clearance may not be obtained, resulting in engine damage.

Remove the crankshaft (page 12-4).

BEARING INSPECTION

Inspect the main journal bearing inserts on the upper and lower crankcase for unusual wear or peeling.
Check the bearing tabs for damage.

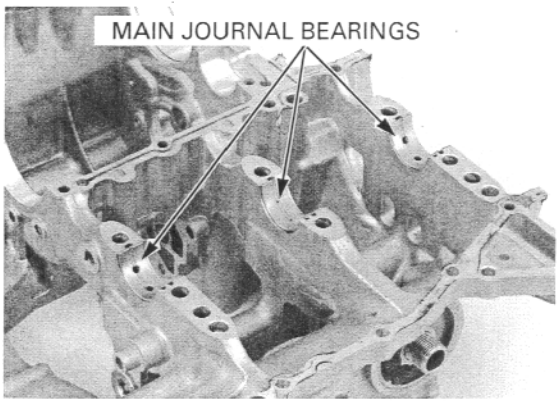

Do not rotate the crankshaft during inspection.

OIL CLEARANCE INSPECTION

Clean off any oil from the bearing inserts and main journals.
Install the crankshaft onto the upper crankcase.
Put a strip of plastigauge lengthwise on each main journal avoiding the oil hole.

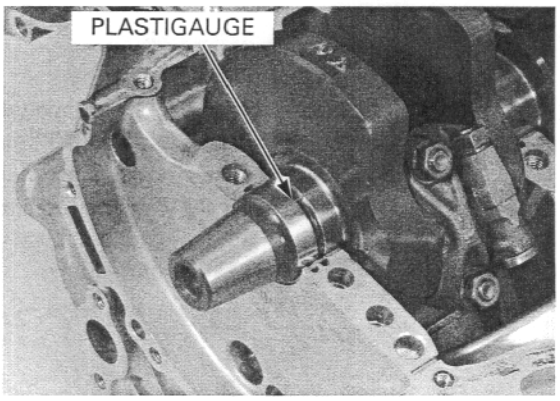

Install the dowel pins and oil orifices.
Carefully install the lower crankcase on the upper crankcase.
Apply engine oil to the main journal 9 mm bolt threads and seating surfaces and install them.
Tighten the 9 mm bolts in several steps, then tighten them to the specified torque.

TORQUE: 20 N·m (2.0 kgf·m, 14 lbf·ft)

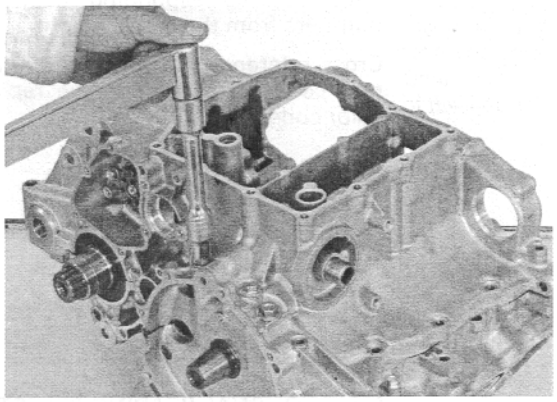

Further tighten the 9 mm bolts 90 degrees in numerical order cast on the lower crankcase.

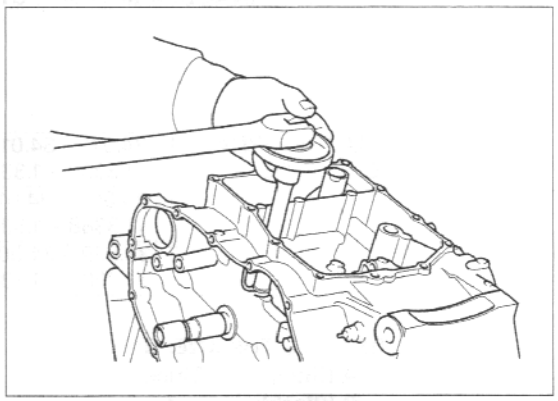

Remove the 9 mm bolts and lower crankcase.

SERVICE LIMIT: 0.05 mm (0.002 in)

If the main bearing clearance is beyond tolerance, select a replacement bearing.

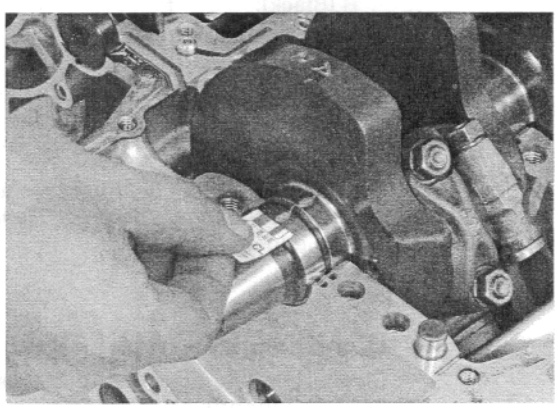

BEARING SELECTION

Letters (A, B or C) on the left side of upper crankcase are the codes for the bearing support I.D.s from left to right.

Record the crankcase bearing support I.D. code letters from the pad on the left side of the upper crankcase as shown.

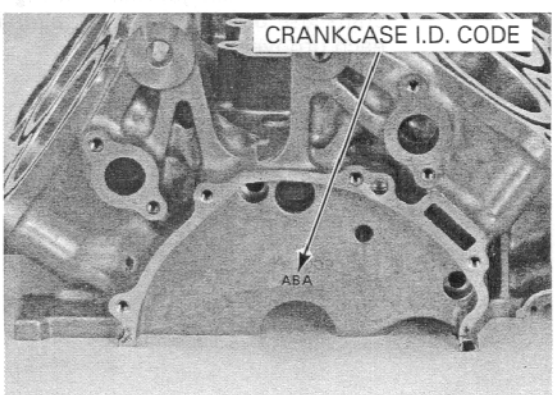

Numbers (1, 2 or 3) on the crank weight are the codes for the main journal O.D.s from left to right.

Record the corresponding main journal O.D. code numbers from the crank weight.

Cross reference the main journal and bearing support codes to determine the replacement bearing color code.

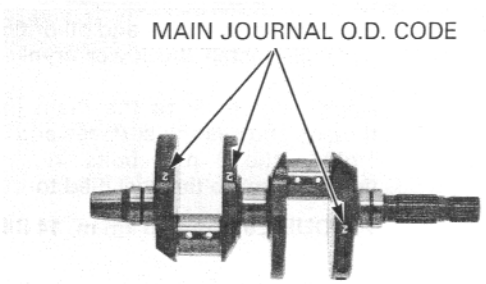

MAIN JOURNAL BEARING SELECTION TABLE:

			BEARING SUPPORRT I.D.CODE		
			A	B	C
			37.000 – 37.006 mm (1.4567 – 1.4569 in)	37.006 – 37.012 mm (1.4569 – 1.4572 in)	37.012 – 37.018 mm (1.4572 – 1.4574 in)
MAIN JOURNAL O.D. CODE	1	34.011 – 34.017 mm (1.3390 – 1.3392 in)	E (Yellow)	D (Green)	C (Brown)
	2	34.005 – 34.011 mm (1.3388 – 1.3390 in)	D (Green)	C (Brown)	B (Black)
	3	33.999 – 34.005 mm (1.3385 – 1.3388 in)	C (Brown)	B (Black)	A (Blue)

BEARING THICKNESS:

A (Blue)	**Thick**
B (Black):	**↑**
C (Brown):	**Middle**
D (Green)	**↓**
E (Yellow)	**Thin**

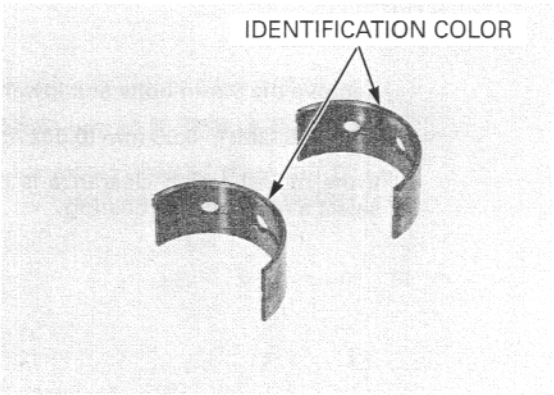

NOTICE

After selecting new bearings, recheck the clearance with a plastigauge. Incorrect clearance can cause severe engine damage.

BEARING INSTALLATION

Clean the bearing outer surfaces and crankcase bearing supports.

Install the main journal bearing inserts onto the crankcase bearing supports, aligning each tab with each grooves.

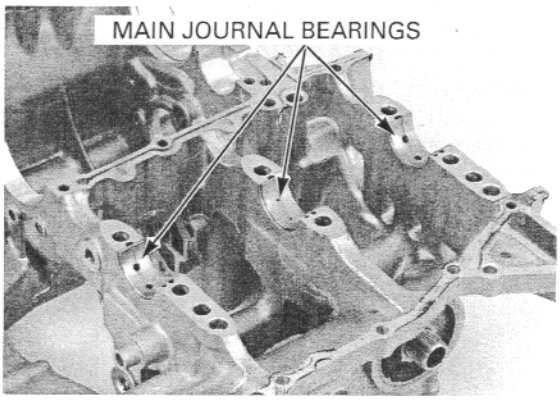

CRANKPIN BEARING

NOTICE

Do not interchange the bearing inserts. They must be installed in their original locations or the correct bearing oil clearance may not be obtained, resulting in engine damage.

Remove the crankshaft (page 12-4).

BEARING INSPECTION

Check the bearing inserts for unusual wear or peeling.
Check the bearing tabs for damage.

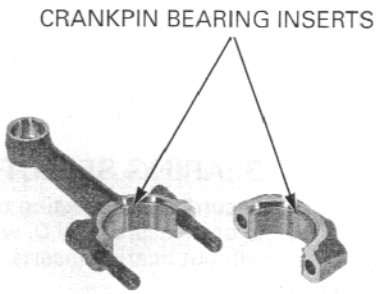

OIL CLEARANCE INSPECTION

Clean off any oil from the bearing inserts and crankpin.
Carefully install the crankshaft onto the upper crankcase.
Set the connecting rods onto the crankpin.
Put a strip of plastigauge lengthwise on the crankpin avoiding the oil hole.

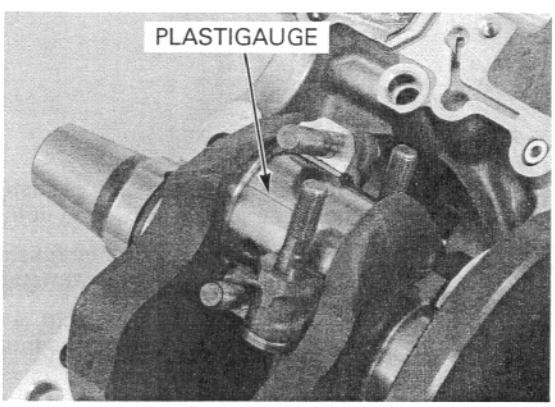

Carefully install the bearing caps by aligning the I.D. code.
Apply engine oil to the connecting rod bearing cap nut threads and seating surfaces and install them.
Tighten the cap nuts in 2 or 3 steps.

TORQUE: 33 N·m (3.4 kgf·m, 25 lbf·ft)

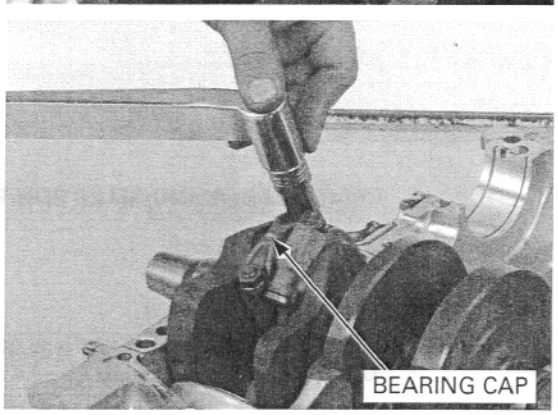

Remove the nuts and bearing cap.
Measure the compressed plastigauge at its widest point on the crankpin to determine the oil clearance.

SERVICE LIMIT: 0.05 mm (0.002 in)

If the oil clearance exceeds the service limit, select the correct replacement bearings.

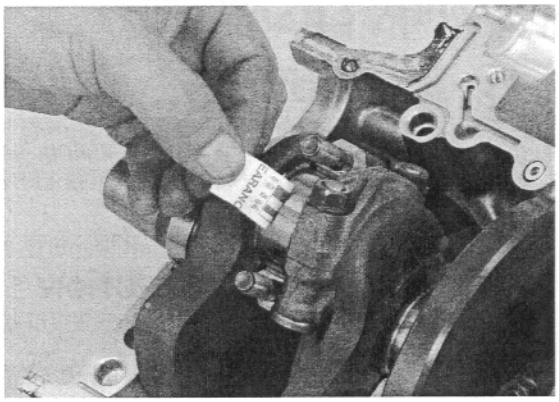

BEARING SELECTION

Numbers (1, 2 or 3) on the connecting rods are the codes for the connecting rod I.D.

Record the connecting rod I.D. code number (1, 2 or 3) or measure the I.D. with the bearing cap installed without bearing inserts.

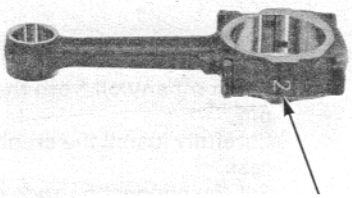

CONNECTING ROD I.D. CODE

Letters (A, B or C) on the crank weight are the codes for the crankpin O.D.s from left to right.

If you are replacing the crankshaft, record the corresponding crankpin O.D. code number (A, B or C).

If you are reusing the crankshaft, measure the crankpin O.D. with the micrometer.

Cross-reference the crankpin and rod codes to determine the replacement bearing color.

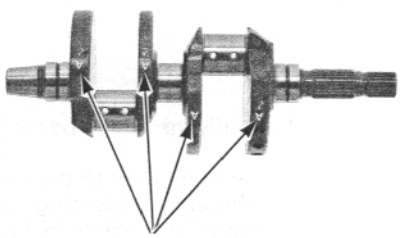

CRANKPIN O.D. CODE

CRANKPIN BEARING SELECTION TABLE:

			CONNECTING ROD I.D.CODE		
			1	2	3
			39.000 – 39.006 mm (1.5354 – 1.5356 in)	39.006 – 39.012 mm (1.5357 – 1.5359 in)	39.012 – 39.018 mm (1.5359 – 1.5361 in)
CRANK PIN O.D. CODE	A	35.994 – 36.000 mm (1.4171 – 1.4173 in)	E (Yellow)	D (Green)	C (Brown)
	B	35.988 – 35.994 mm (1.4168 – 1.4171 in)	D (Green)	C (Brown)	B (Black)
	C	35.982 – 35.988 mm (1.4166 – 1.4168 in)	C (Brown)	B (Black)	A (Blue)

BEARING THICKNESS:

A (Blue)	**Thick**
B (Black):	**↑**
C (Brown):	**Middle**
D (Green)	**↓**
E (Yellow)	**Thin**

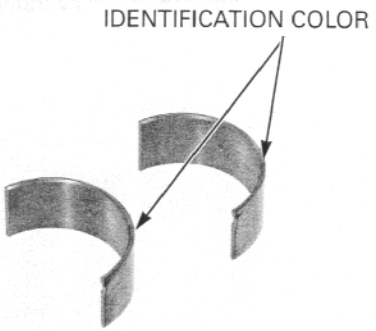

NOTICE

After selecting new bearings, recheck the clearance with a plastigauge. Incorrect clearance can cause severe engine damage.

BEARING INSTALLATION

Clean the bearing outer surfaces. bearing cap and connecting rod.
Install the crankpin bearing inserts onto the bearing cap and connecting rod, aligning each tab with each groove.

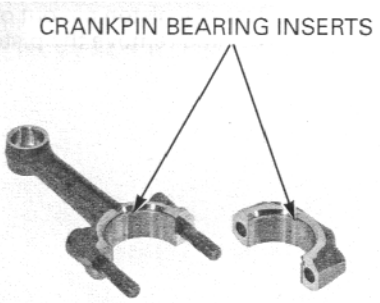

PISTON/CYLINDER

Mark all the parts as you remove them to indicate the correct cylinder for reassembly.

PISTON/CONNECTING ROD REMOVAL

NOTICE

- *This motorcycle is equipped with aluminum cylinder sleeves. Before piston removal, place a clean shop towel around the connecting rod to prevent damaging the cylinder sleeve.*
- *Do not try to remove the piston/connecting rod assembly from the bottom of the cylinder; the assembly will get stuck in the gap between the cylinder liner and the upper crankcase.*
- *Do not interchange the bearing inserts. They must be installed in their original locations or the correct bearing oil clearance may not be obtained, resulting in engine damage.*

Remove the nuts and connecting rod bearing cap.

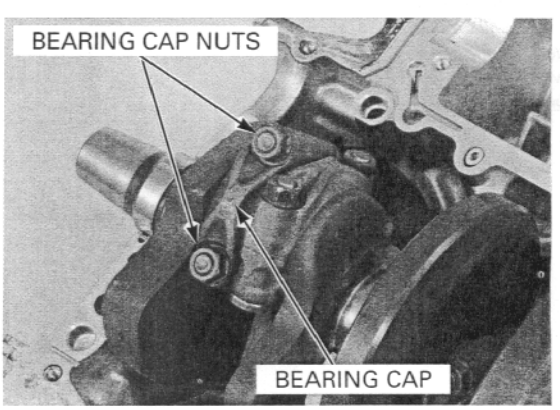

Remove the piston/connecting rod assembly from the top of the cylinder.



PISTON REMOVAL

Remove the piston pin clip with pliers.
Push the piston pin out of the piston and connecting rod, and remove the piston.

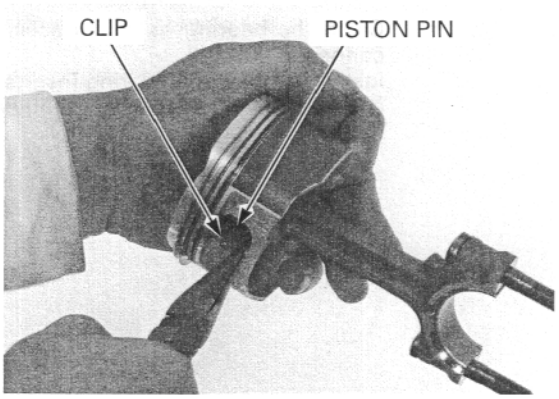

PISTON DISASSEMBLY

Do not damage the piston ring by spreading the ends too far.

Spread each piston ring and remove it by lifting up at a point opposite the gap.

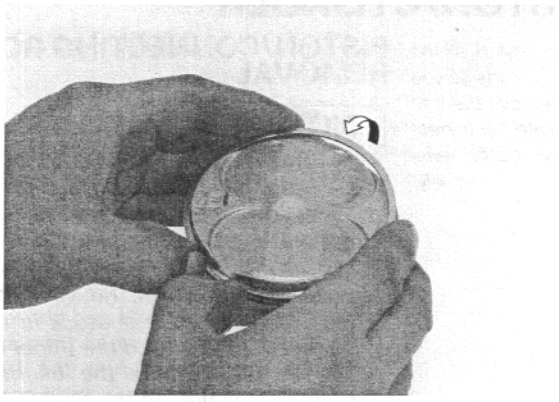

Clean carbon deposits from the ring grooves with a ring that will be discarded. Never use a wire brush; it will scratch the groove.

Remove any carbon deposits from the piston ring grooves.

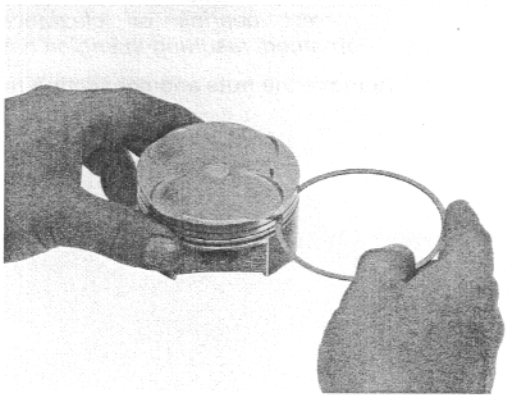

PISTON INSPECTION

Temporarily install the piston rings to their proper position with the mark facing up.

Measure the piston ring-to-ring groove clearance with the rings pushed into the grooves.

SERVICE LIMITS:

Top: 0.11 mm (0.004 in)
Second: 0.10 mm (0.004 in)

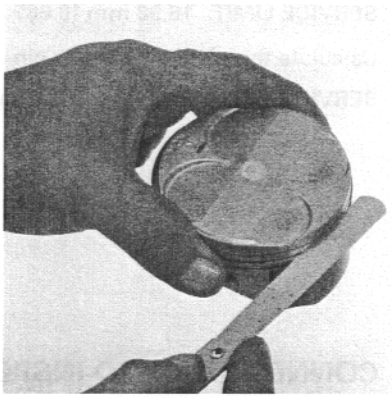

Insert the piston ring squarely into the bottom of the cylinder and measure the ring end gap.

SERVICE LIMITS:

Top: 0.5 mm (0.02 in)
Second: 0.6 mm (0.02 in)
Oil (side rail): 0.9 mm (0.04 in)

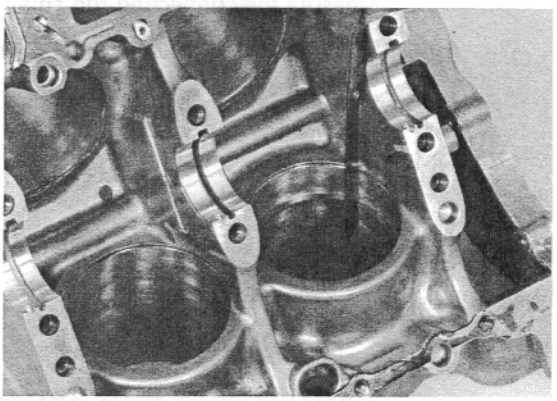

Measure the diameter of the piston at 18 mm (0.7 in) from the bottom and 90 degrees to the piston pin hole.

SERVICE LIMIT: 71.90 mm (2.831 in)

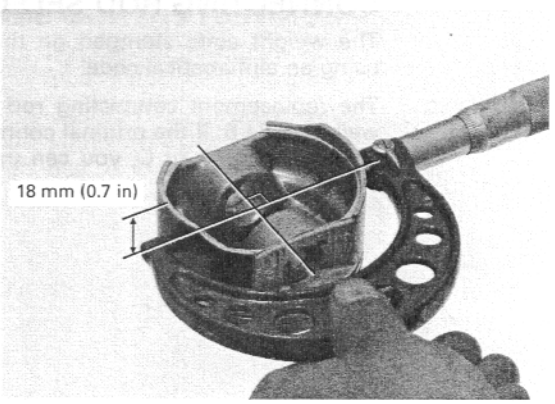

Measure the piston pin bore.

SERVICE LIMIT: 17.02 mm (0.670 in)

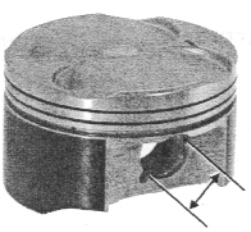

Measure the O.D. of the piston pin.

SERVICE LIMIT: 16.98 mm (0.669 in)

Calculate the piston-to-piston pin clearance.

SERVICE LIMIT: 0.04 mm (0.002 in)

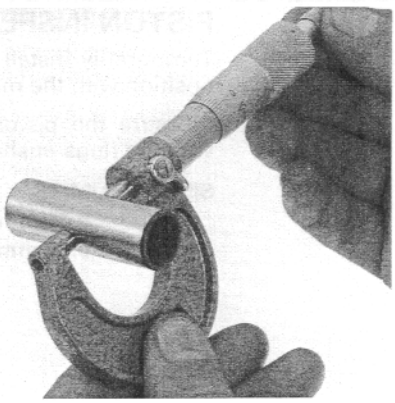

CONNECTING ROD INSPECTION

Measure the connecting rod small end I.D.

SERVICE LIMIT: 17.04 mm (0.671 in)

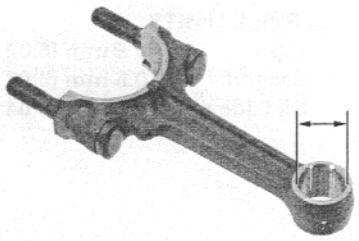

CONNECTING ROD SELECTION

The weight code stamped on the connecting rod using an alphabetical code.

The replacement connecting rod is available only weight code B. If the original connecting rod weight code is either A or C, you can use weight code B connecting rod.

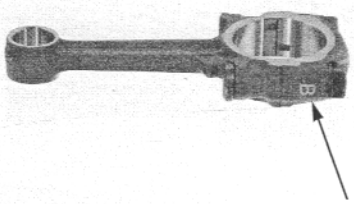

WEIGHT CODE

CYLINDER INSPECTION

Inspect the top of the cylinder for warpage.

SERVICE LIMIT: 0.10 mm (0.004 in)

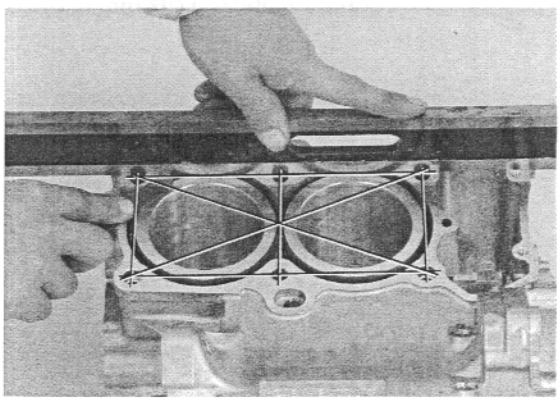

Inspect the cylinder bore for wear or damage.
Measure the cylinder I.D. in X and Y axis at three levels.
Take the maximum reading to determine the cylinder wear.

SERVICE LIMIT: 72.10 mm (2.839 in)

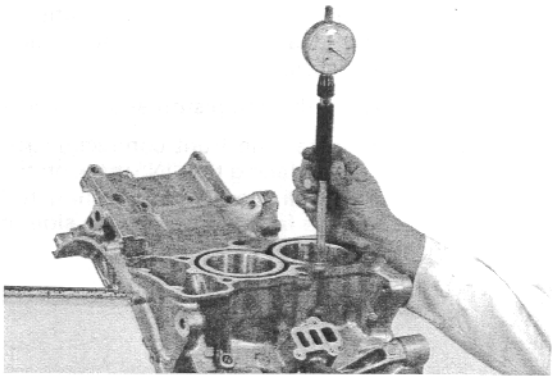

Calculate the piston-to-cylinder clearance.
Take a maximum reading to determine the clearance.
Refer procedures for measurement of the piston O.D (page 12-13).

SERVICE LIMIT: 0.10 mm (0.004 in)

Calculate the taper and out of round at three levels in X and Y axis, Take the maximum reading to determine them.

SERVICE LIMITS:
Taper: 0.10 mm (0.004 in)
Out of round: 0.10 mm (0.004 in)

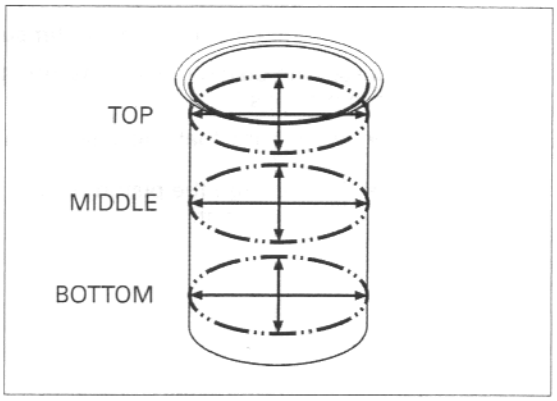

The cylinder must be rebored and an oversize piston fitted if the service limits are exceeded.

The following oversize pistons are available:
0.25 mm (0.010 in)
0.50 mm (0.020 in)

The piston to cylinder clearance for the oversize piston must be: 0.015 – 0.050 mm (0.0006 – 0.0020 in).

PISTON ASSEMBLY

Carefully install the piston rings into the piston ring grooves with their marking facing up.

- Apply oil to the piston rings.
- Avoid piston and piston ring damage during installation.
- Install the piston rings with the marking (R) facing up.
- Do not mix the top and second rings; top ring is narrower than the second ring in width.

Stagger the piston ring end gaps 120° apart from each other.
Stagger the side rail end gaps as shown.

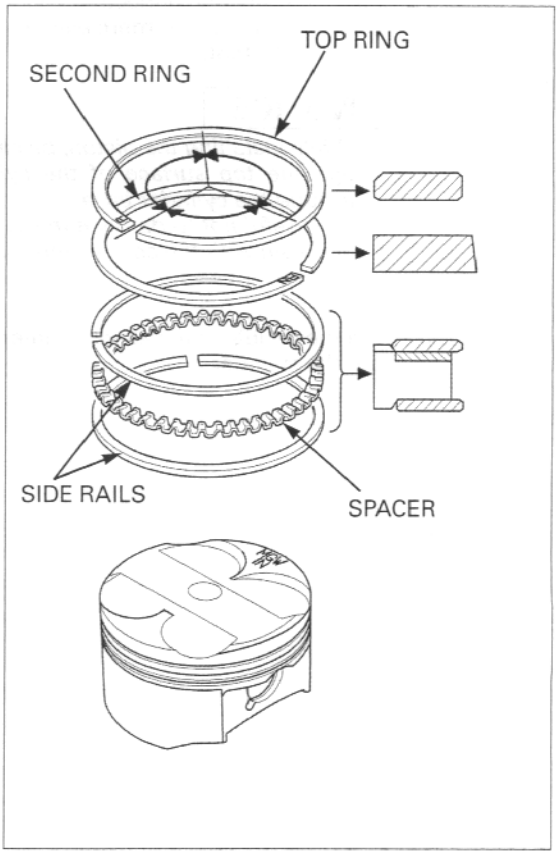

PISTON INSTALLATION

Apply molybdenum oil solution to the connecting rod small end inner surfaces and piston pin outer surfaces.

Assemble the piston and connecting rod.

- Install the front connecting rod with its oil hole side facing the "IN" mark on the piston crown.
- Install the rear connecting rod with its oil hole side facing the opposite side of the "IN" mark on the piston crown.

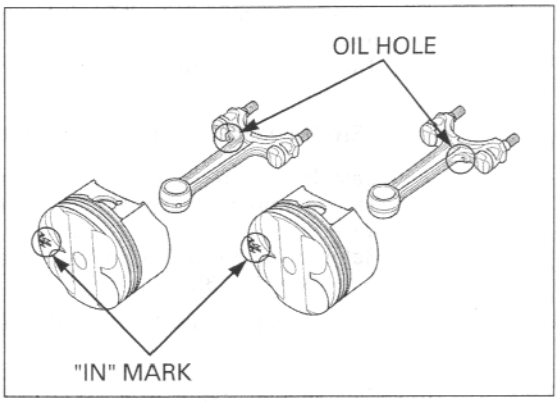

Apply oil to the piston pin outer surface.

Install the piston pin, and secure it using a new piston pin clips.

- Make sure that the piston pin clips are seated securely.
- Do not align the piston pin clip end gap with the piston cut-out.

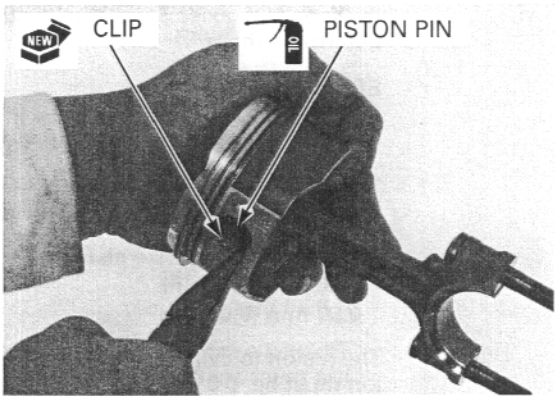

Apply engine oil to the cylinder wall, piston and piston rings.

Install the piston/connecting rod assembly with the piston "IN" mark facing to the intake side.

Install the piston/connecting rod assembly into the cylinder using a commercially available piston ring compressor tool.

NOTICE

- *While installing the piston, be careful not to damage the top surface of the cylinder, especially around the cylinder bore.*
- *Be careful not to damage the cylinder sleeve and crankpin with the connecting rod bolt threads.*

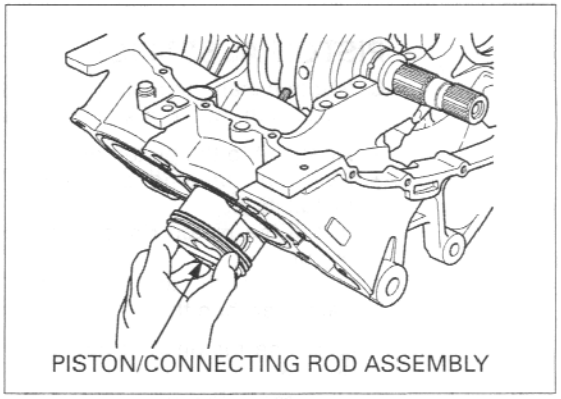
PISTON/CONNECTING ROD ASSEMBLY

Make sure the ring compressor tool sits flush with top surface of the cylinder.

Use the handle of a plastic hammer to tap the piston into the cylinder.

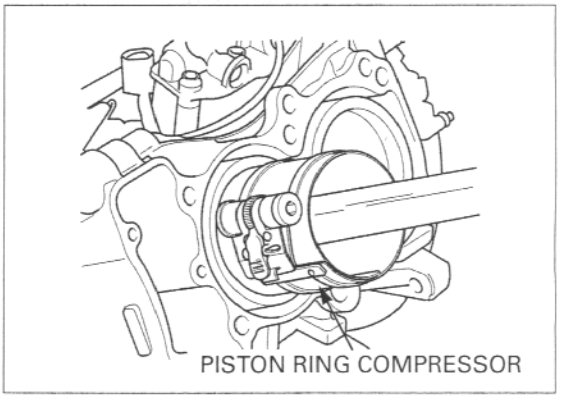
PISTON RING COMPRESSOR

Apply molybdenum oil solution to the crankpin bearing surfaces.
Install the bearing cap.
Insure that the marks on the caps are aligned with the marks on the connecting rods.

Apply oil to the connecting rod bearing cap nut threads and seating surfaces.

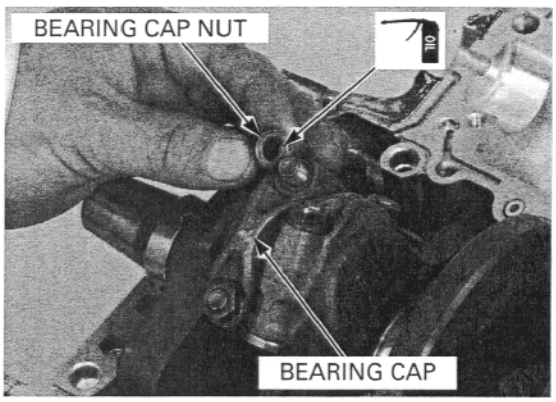

Install the connecting rod nuts and tighten the nuts gradually and alternately, then tighten them to the specified torque.

TORQUE: 33 N·m (3.4 kgf·m, 25 lbf·ft)

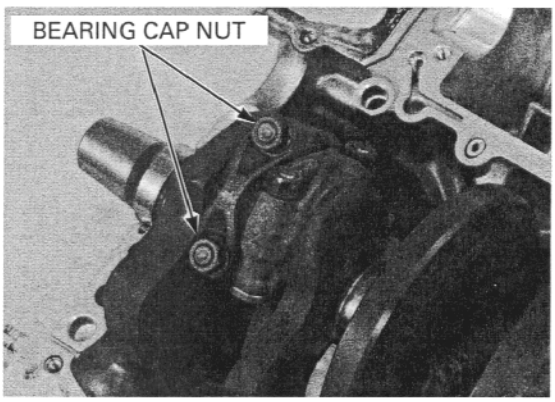

MEMO

13. FRONT WHEEL/SUSPENSION/STEERING

COMPONENT LOCATION 13-2

SERVICE INFORMATION 13-3

TROUBLESHOOTING 13-4

HANDLEBARS 13-5

FRONT WHEEL 13-11

FORK 13-18

STEERING STEM 13-30

COMPONENT LOCATION

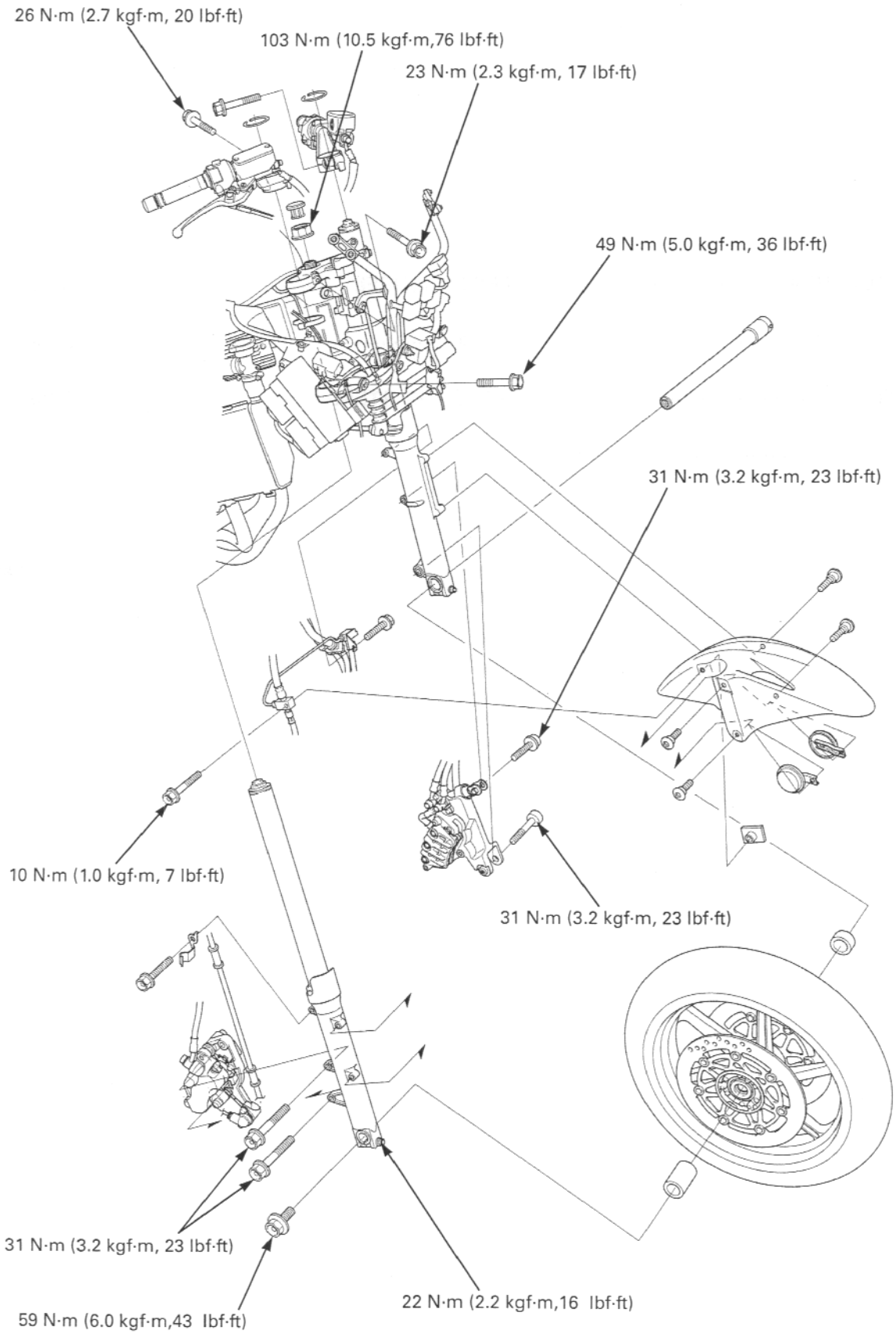

SERVICE INFORMATION

GENERAL

- When servicing the front wheel, fork or steering stem, support the motorcycle using a safety stand or hoist.
- A contaminated brake disc or pad reduces stopping power. Discard contaminated pads and clean a contaminated disc with a high quality brake degreasing agent.
- After the front wheel installation, check the brake operation by applying the brake lever and pedal.
- Refer to the brake system information (page 15-4).
- Use only tires marked "TUBELESS" and tubeless valve stems on rim marked "TUBELESS TIRE APPLICABLE".

SPECIFICATIONS

Unit: mm (in)

ITEM		STANDARD	SERVICE LIMIT
Minimum tire tread depth		–	1.5 (0.06)
Cold tire pressure	Up to 90 kg (200 lb) load	250 kPa (2.50 kgf/cm^2, 36 psi)	–
	Up to maximum weight capacity	250 kPa (2.50 kgf/cm^2, 36 psi)	–
Axle runout		–	0.2 (0.01)
Wheel rim runout	Radial	–	2.0 (0.08)
	Axial	–	2.0 (0.08)
Wheel balance weight		–	60 g (2.1oz) max.
Fork	Spring free length	334.3 (13.16)	327.61 (12.898)
	Pipe runout	–	0.20 (0.008)
	Pre-load adjuster initial setting	6 mm (0.2 in) from top surface of fork cap	–
	Recommended fork fluid	Pro Honda Suspension Fluid SS-8	–
	Fluid level	100 (3.9)	–
	Fluid capacity	544 ± 2.5 cm^3 (18.4 ± 0.08 US oz, 19.1 ± 0.09 Imp oz)	–
Steering head bearing pre-load		1.0 – 1.5 kgf (2.2 – 3.3 lbf)	–

TORQUE VALUES

Handlebar weight mounting screw	10 N·m (1.0 kgf·m, 7 lbf·ft)	ALOC screw; replace with a new one
Handlebar pinch bolt	26 N·m (2.7 kgf·m, 20 lbf·ft)	
Front axle bolt	59 N·m (6.0 kgf·m, 43 lbf·ft)	
Front axle holder pinch bolt	22 N·m (2.2 kgf·m, 16 lbf·ft)	
Front brake disc bolt	20 N·m (2.0 kgf·m, 14 lbf·ft)	ALOC bolt; replace with a new one
Fork socket bolt	20 N·m (2.0 kgf·m, 14 lbf·ft)	Apply a locking agent to the threads
Fork bolt	23 N·m (2.3 kgf·m, 17 lbf·ft)	
For damper rod lock nut	20 N·m (2.0 kgf·m, 14 lbf·ft)	
Steering stem nut	103 N·m (10.5 kgf·m, 76 lbf·ft)	
Steering bearing adjusting nut	25 N·m (2.5 kgf·m, 18 lbf·ft)	Apply oil to the threads and seating surface See page 13-37
Steering bearing adjusting nut lock nut	–	
Fork top bridge pinch bolt	23 N·m (2.3 kgf·m, 17 lbf·ft)	
Fork bottom bridge pinch flange bolt	49 N·m (5.0 kgf·m, 36 lbf·ft)	
Front brake hose clamp flange bolt (left fork)	10 N·m (1.0 kgf·m, 7 lbf·ft)	
Front brake hose 3-way joint bolt (right fork)	10 N·m (1.0 kgf·m, 7 lbf·ft)	
Front brake hose clamp bolt (steering stem)	10 N·m (1.0 kgf·m, 7 lbf·ft)	
Right front brake caliper mounting bolt	31 N·m (3.2 kgf·m, 23 lbf·ft)	ALOC bolt; replace with a new one
Front wheel pulser ring mounting bolt (ABS type)	7 N·m (0.7 kgf·m, 5.1 lbf·ft)	Apply a locking agent to the threads
Left front brake caliper pivot bolt	31 N·m (3.2 kgf·m, 23 lbf·ft)	ALOC bolt; replace with a new one
Left front brake caliper bolt (second master cylinder)	31 N·m (3.2 kgf·m, 23 lbf·ft)	ALOC bolt; replace with a new one

TOOLS

Bearing remover shaft	07746-0050100
Bearing remover head, 20 mm	07746-0050600
Driver	07749-0010000
Attachment, 42 X 47 mm	07746-0010300
Pilot, 20 mm	07746-0040500
Fork seal driver	07947-KF00100
Fork seal driver attachment	07947-KA40200
Needle bearing remover	07946-KA50000
Steering stem socket	07916-3710101 or 07916-3710100
Ball race remover set	07946-KM90001
– Driver attachment, A	07946-KM90100
– Driver attachment, B	07946-KM90200
– Driver shaft assembly	07946-KM90300
– Bearing remover, A	07946-KM90401
– Bearing remover, B	07946-KM90500
– Assembly base	07946-KM90600
Steering stem driver	07946-MB00000

TROUBLESHOOTING

Hard steering
- Steering head bearing adjustment nut too tight
- Worn or damaged steering head bearings
- Bent steering stem
- Insufficient tire pressure

Steers to one side or does not track straight
- Damaged or loose steering head bearings
- Bent forks
- Bent axle
- Bent axle
- Bent frame
- Worn or damaged wheel bearings
- Worn or damaged swingarm pivot bearings

Front wheel wobbling
- Bent rim
- Worn or damaged front wheel bearings
- Faulty tire
- Unbalanced front tire and wheel

Front heel turns hard
- Faulty front wheel bearing
- Bent front axle
- Front brake drag

Soft suspension
- Insufficient fluid in fork
- Incorrect fork fluid weight
- Weak fork springs
- Insufficient tire pressure

Hard suspension
- Bent fork tubes
- To much fluid in fork
- Incorrect fork fluid weight
- Clogged fork fluid passage

Front suspension noise
- Insufficient fluid in fork
- Loose fork fasteners

HANDLEBARS

RIGHT HANDLEBAR REMOVAL

Hold the handlebar weight and remove the mounting screw and the weight.

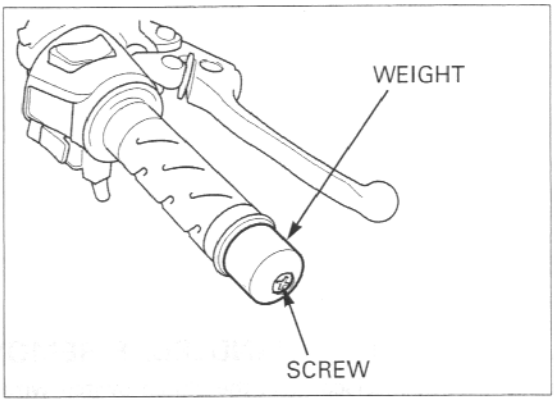

Disconnect the front brake switch wire connectors from the switch.

Keep the brake master cylinder upright to prevent air from entering the hydraulic system

Remove the master cylinder holder bolts, holder and master cylinder assembly.

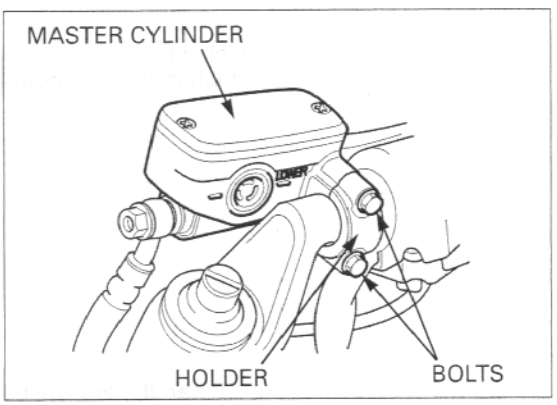

Remove the right handlebar switch/throttle housing screws.

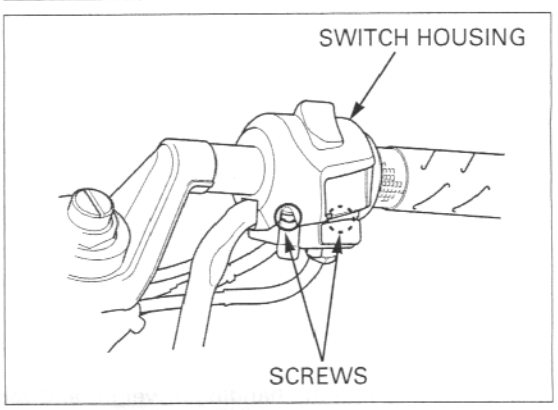

Remove the stop ring from the fork pipe.

Loosen the right handlebar pinch bolt and remove the handlebar.

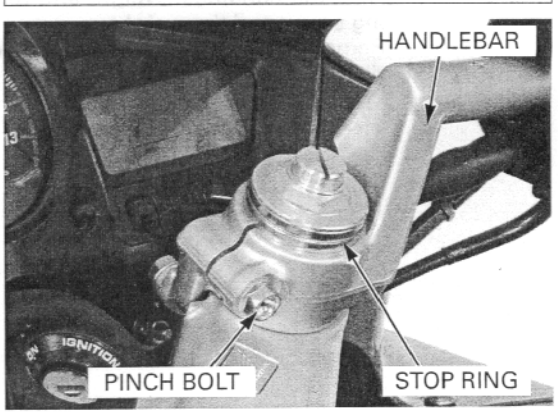

Remove the throttle pipe from the right handlebar.

Disconnect the throttle cable ends from the throttle pipe and remove the housing.

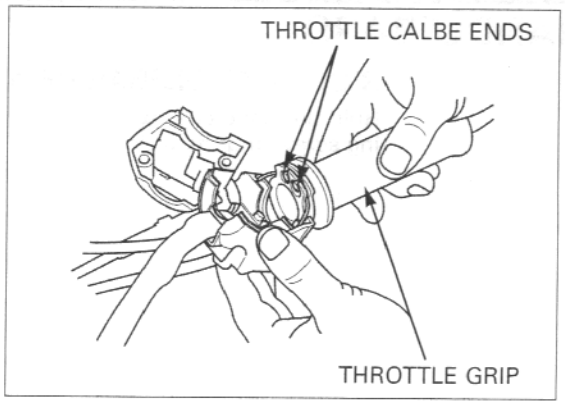

LEFT HANDLEBAR REMOVAL

Disconnect the clutch switch wire connectors from the switch.

Keep the clutch master cylinder upright to prevent air from entering the hydraulic system

Remove the clutch master cylinder holder bolts, holder and clutch master cylinder assembly.

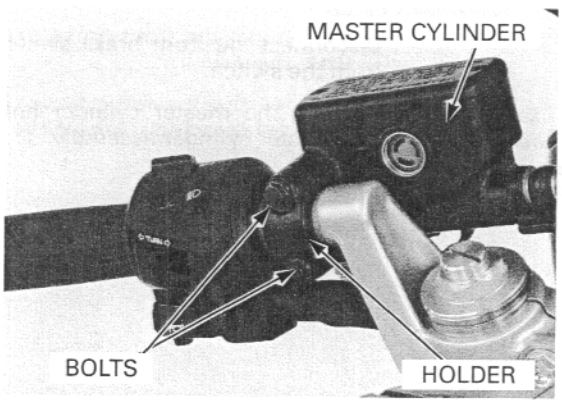

Remove the left handlebar switch housing screw.

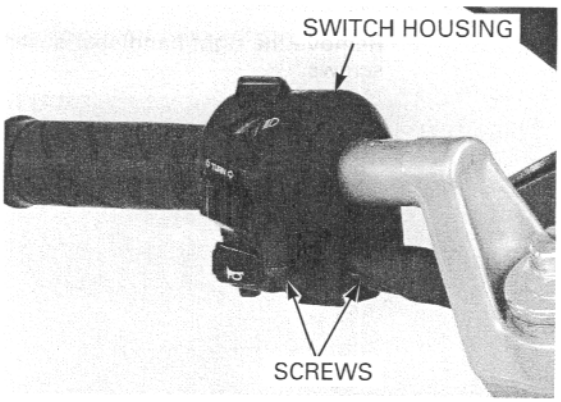

Hold the handlebar weight and remove the mounting screw and the weight.
Remove the handle grip and spacer from the handlebar.

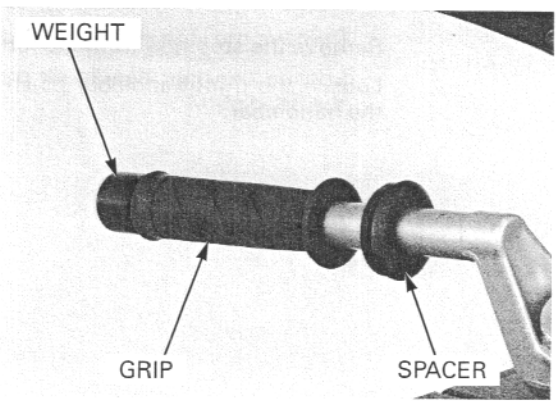

Remove the stop ring from the fork pipe.
Loosen the left handlebar pinch bolt and remove the handlebar.

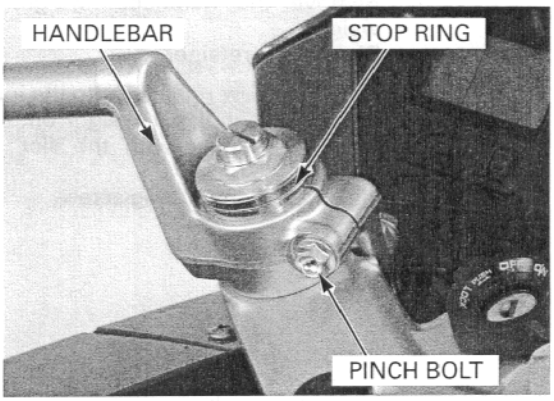

LEFT HANDLEBAR INSTALLATION

Install the left handlebar onto the fork pipe, aligning its boss with the groove in the fork top bridge.

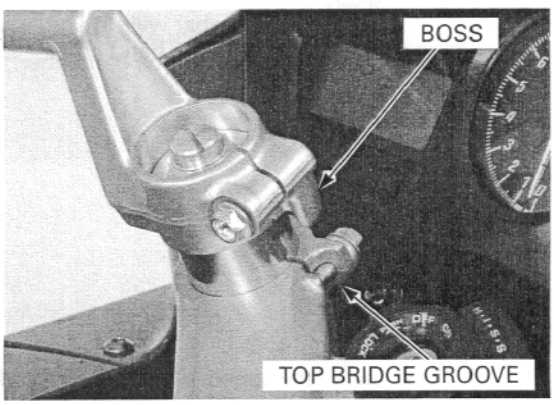

Tighten the handlebar pinch bolt to the specified torque.

TORQUE: 26 N·m (2.7 kgf·m, 20 lbf·ft)

Install the stop ring into the fork pipe groove.

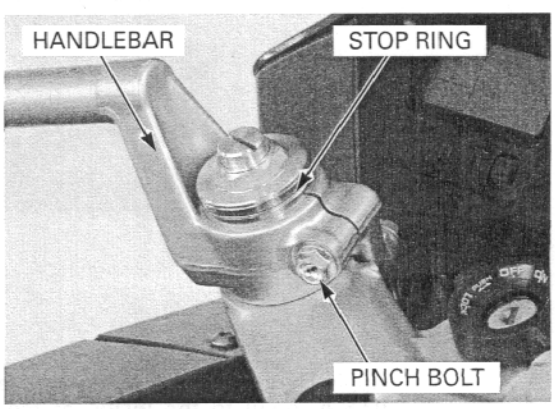

Handlebar Weight Replacement

Remove the grip from the handlebar.
Straighten the weight retainer tab with a screwdriver or punch.

Apply lubricant spray through the tab locking hole to the rubber for easy removal.

Temporarily install the handlebar weight and screw, then remove the handlebar weight assembly by turning the grip end.

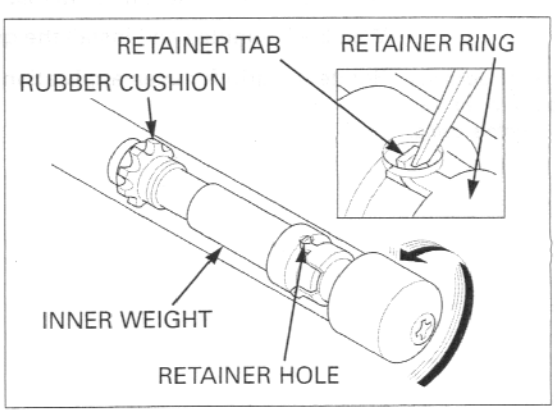

Remove the handlebar weight from the inner weight.
Discard the retainer.

Install the new retainer onto the inner weight.
Install the handlebar weight onto the inner weight aligning its boss with the slot in the handlebar weight.
Install a new mounting screw.

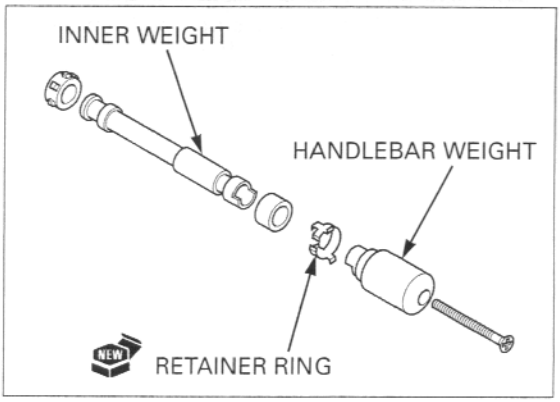

Insert the handlebar weight assembly into the handlebar.
Turn the handlebar weight and hook the retainer tab with the hole in the handlebar.

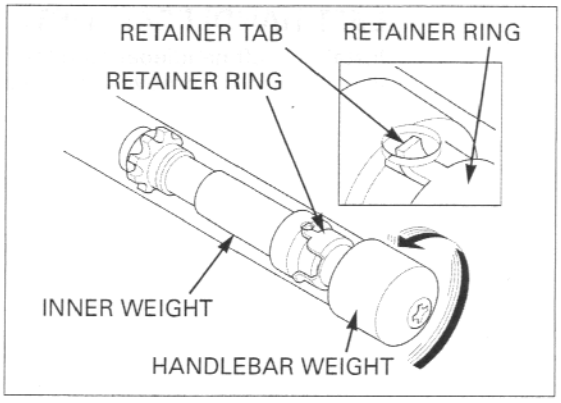

Install the spacer onto the left handlebar.

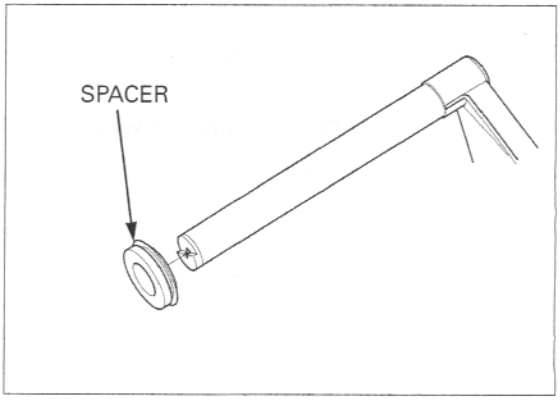

Apply Honda Bond A or Honda Hand Grip Cement (U.S.A. only) to the inside of the grip and to the clean surfaces of the left handlebar and throttle grip.

Wait 3 – 5 minutes and install the grip.

Allow the adhesive to dry for an hour before using.

Rotate the grip for even application of the adhesive.

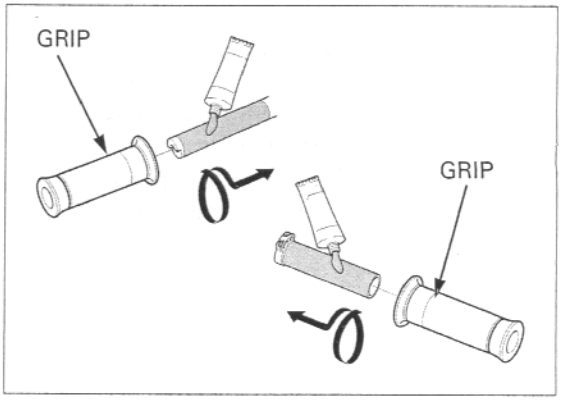

Install the left handlebar weight and tighten the new screw to the specified torque.

TORQUE: 10 N·m (1.0 kgf·m, 7 lbf·ft)

Install the left handlebar switch housing aligning its locating pin with the hole in the handlebar.

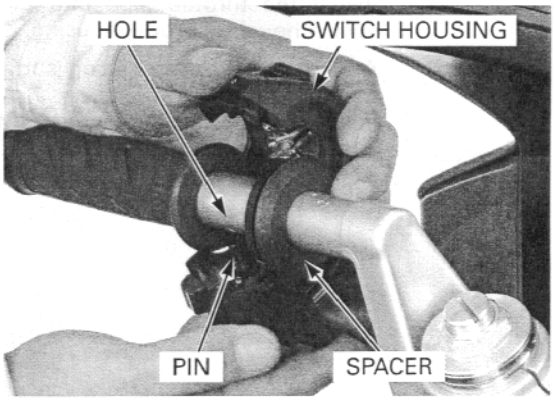

Tighten the forward screw first, then the rear screw.

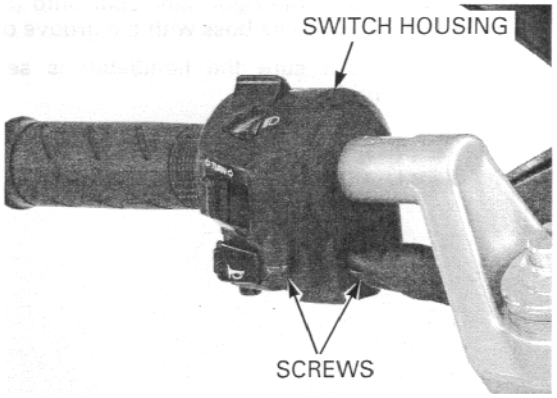

Install the clutch lever bracket assembly by aligning the end of the clutch master cylinder with the punch mark on the handlebar.
Install the clutch master cylinder holder with the "UP" mark facing up.
Tighten the upper bolt first, then the lower bolt.

Connect the clutch switch wire connectors.

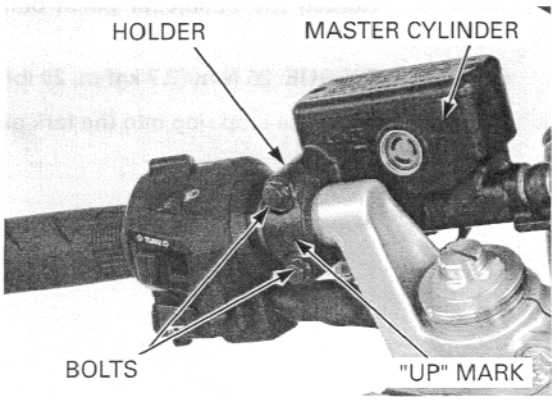

RIGHT HANDLEBAR INSTALLATION

Apply grease to the throttle cable sliding surface of the throttle pipe.
Connect the throttle cables to the throttle pipe.

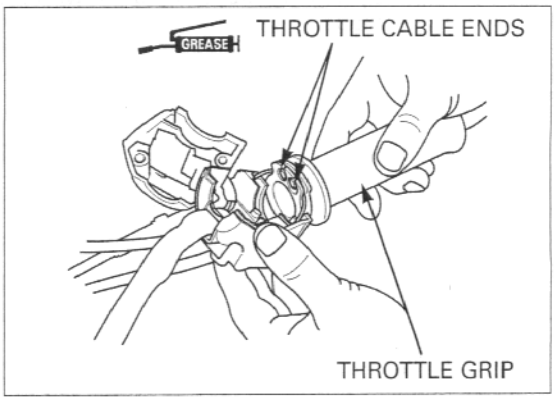

Install the throttle pipe into the right handlebar switch housing/throttle housing.

Apply grease to the sliding surface of the throttle pipe.
Install the throttle pipe on the right handlebar.

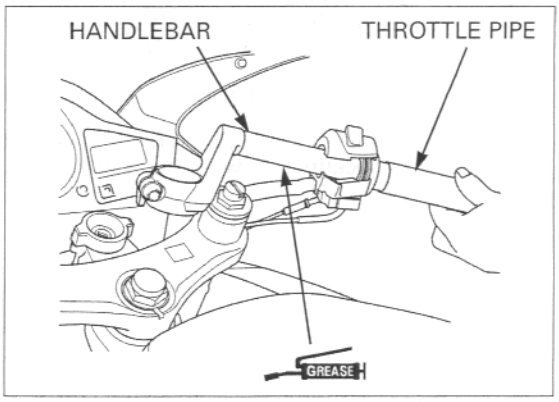

Install the right handlebar onto the fork pipe while aligning its boss with the groove of the top bridge.

Make sure the handlebar is seated on the top bridge.

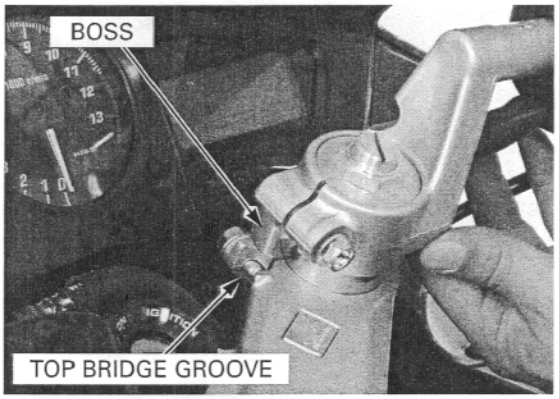

Tighten the handlebar pinch bolt to the specified torque.

TORQUE: 26 N·m (2.7 kgf·m, 20 lbf·ft)

Install the stop ring into the fork pipe groove.

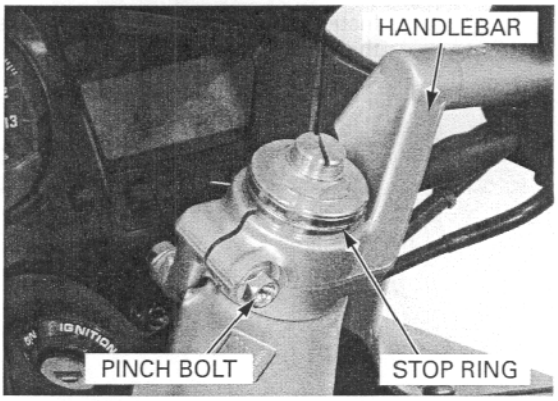

Install the right handlebar switch/throttle housing by aligning its locating pin with the hole in the handlebar.

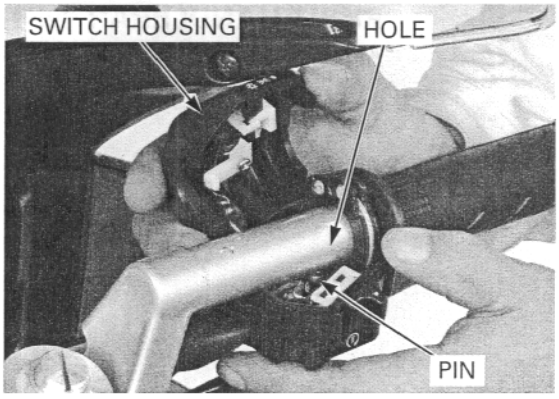

Tighten the forward screw first, then the rear screw.

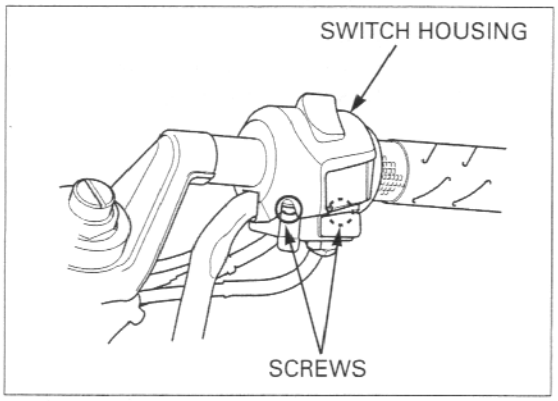

Install the master cylinder by aligning the end of the master cylinder with the punch mark on the handlebar.
Install the master cylinder holder with the "UP" mark facing up.
Tighten the upper bolt first, the lower bolt.

Connect the brake switch wire connectors.

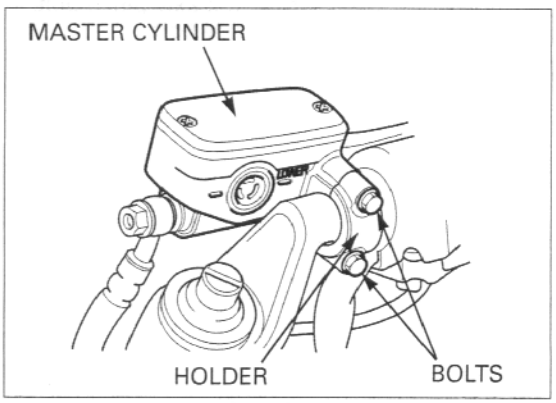

Install the handlebar weight and tighten the new mounting screw to the specified torque.

TORQUE: 10 N·m (1.0 kgf·m, 7 lbf·ft)

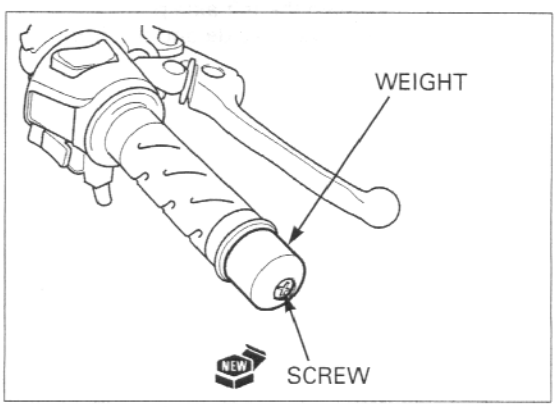

FRONT WHEEL

REMOVAL

Support the motorcycle securely using a safety stand or a hoist.

Remove the bolts, reflectors and front fender.

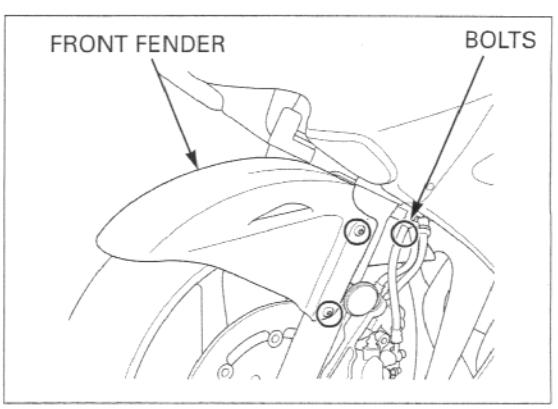

Remove the mounting bolts and right brake caliper.

Do not operate the brake lever and pedal after the brake caliper is removed.

Support the brake caliper with a piece of wire so that it does not hang from the brake hose. Do not twist the brake hose.

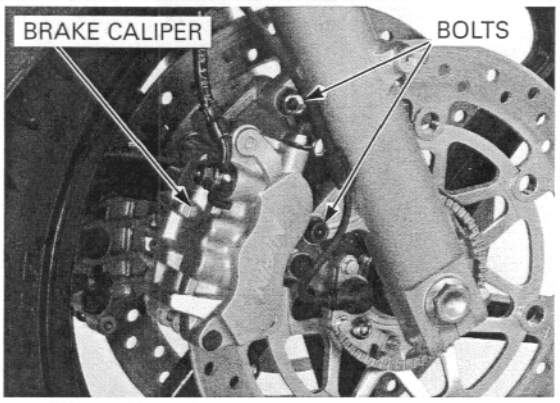

Loosen the right axle pinch bolt.
Remove the axle bolt.

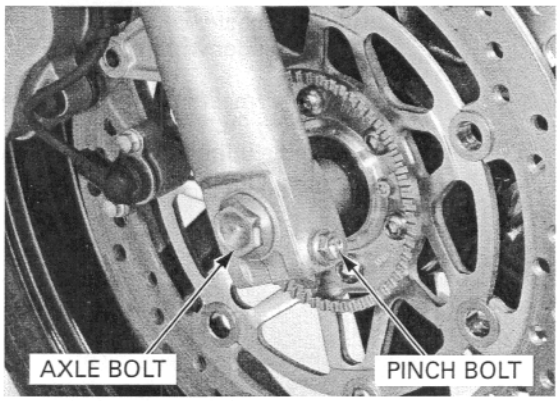

Loosen the left axle pinch bolt.
Remove the axle and the front wheel.

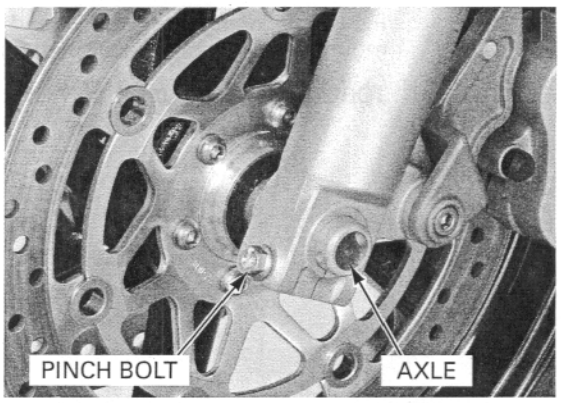

Remove the side collars.

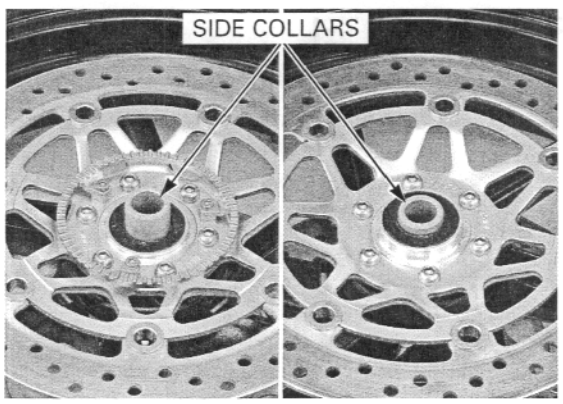

INSPECTION

Axle

Set the axle in V-block and measure the runout.
Actual runout is 1/2 the total indicator reading.

SERVICE LIMIT: 0.2 mm (0.01 in)

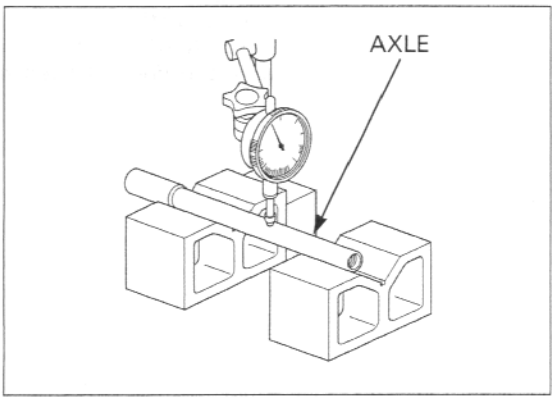

Wheel Bearing

Turn the inner race of each bearing with your finger.
The bearings should turn smoothly and quietly.
Also check that the bearing outer race fits tightly in the hub.

Replace the bearings in pairs.

Remove and discard the bearings if they do not turn smoothly, quietly, or if they fit loosely in the hub.

Replace the new bearings, if necessary (page 13-14).

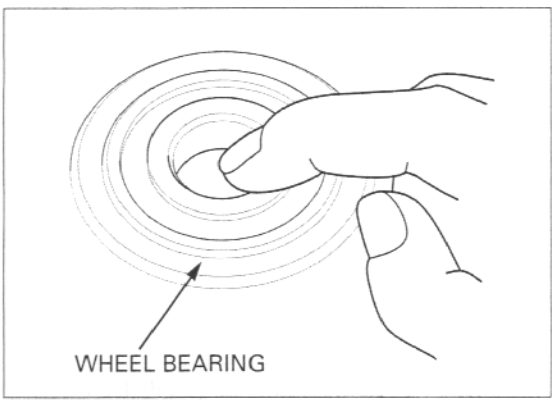

Wheel Rim Runout

Check the rim runout by placing the wheel in a trueing stand.
Spin the wheel by hand, and read the runout using a dial indicator.
Actual runout is 1/2 the total indicator reading.

SERVICE LIMITS:
Radial: 2.0 mm (0.08 in)
Axial: 2.0 mm (0.08 in)

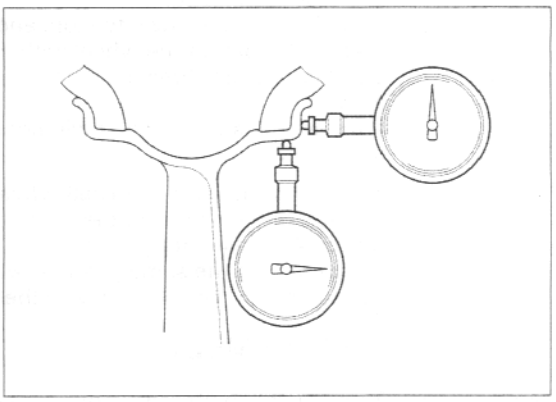

For optimum balance, the tire balance mark (a paint dot on the side wall) must be located next to the valve stem. Remount the tire if necessary.

Wheel Balance

NOTICE

Wheel balance directly affects the stability, handling and overall safety of the motorcycle. Always check balance when the tire has been removed from the rim.

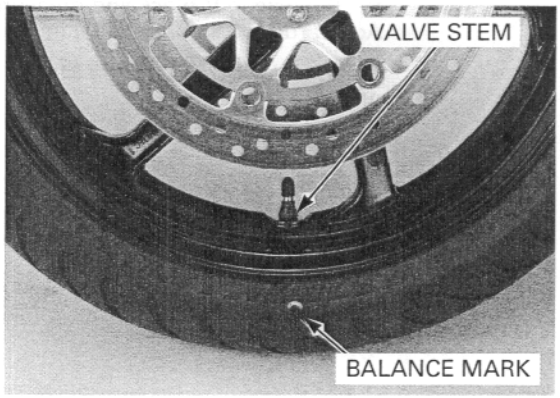

Note the rotating direction marks on the wheel and tire.

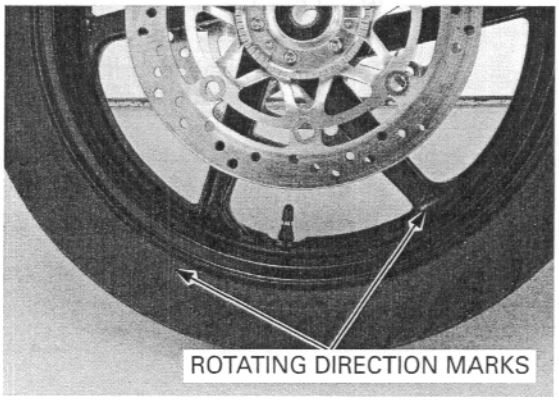

Remove the dust seals from the wheel.
Mount the wheel, tire and brake discs assembly in an inspection stand.
Spin the wheel, allow it to stop, and mark the lowest (heaviest) point of the wheel with a chalk.
Do this two or three times to verify the heaviest area.
If the wheel is balanced, it will not stop consistently in the same position.

To balance the wheel, install wheel weights on the highest side of the rim, the side opposite the chalk marks. Add just enough weight so the wheel will no longer stop in the same position when it is spun. Do not add more than 60 grams to the wheel.

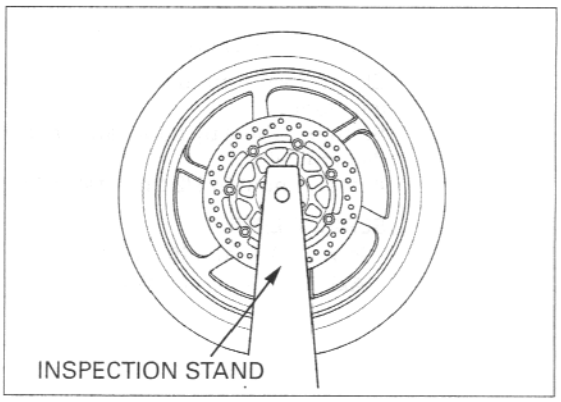

DISASSEMBLY

ABS type only: Remove the bolts and front pulser ring from the right brake disc.

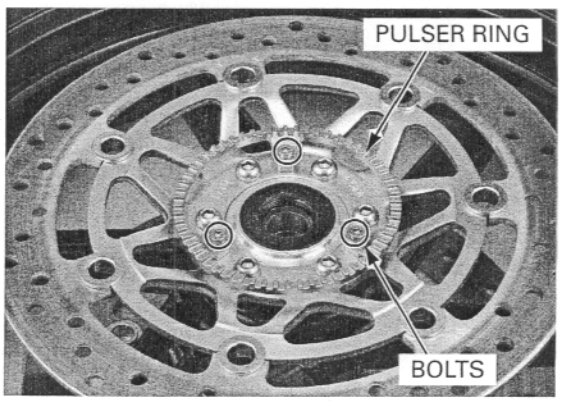

Remove the bolts and brake discs.
Remove the dust seals.

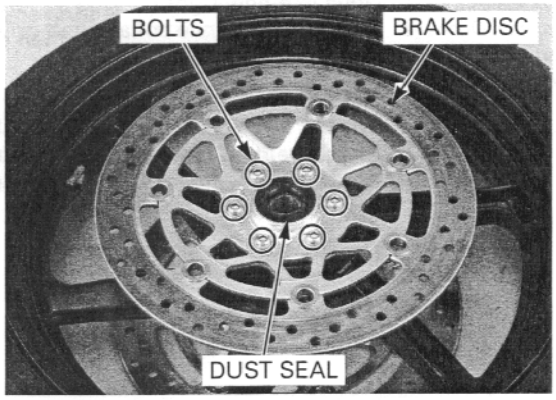

Install the bearing remover head into the bearing. From the opposite side, install the bearing remover shaft and drive the bearing out of the wheel hub. Remove the distance collar and drive out the other bearing.

TOOLS:
Bearing remover head, 20 mm 07746-0050600
Bearing remover shaft 07746-0050100

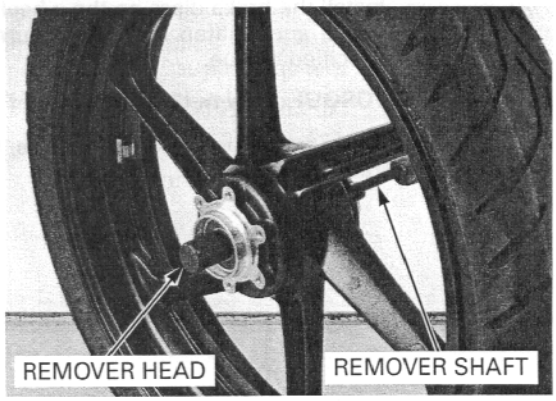

ASSEMBLY

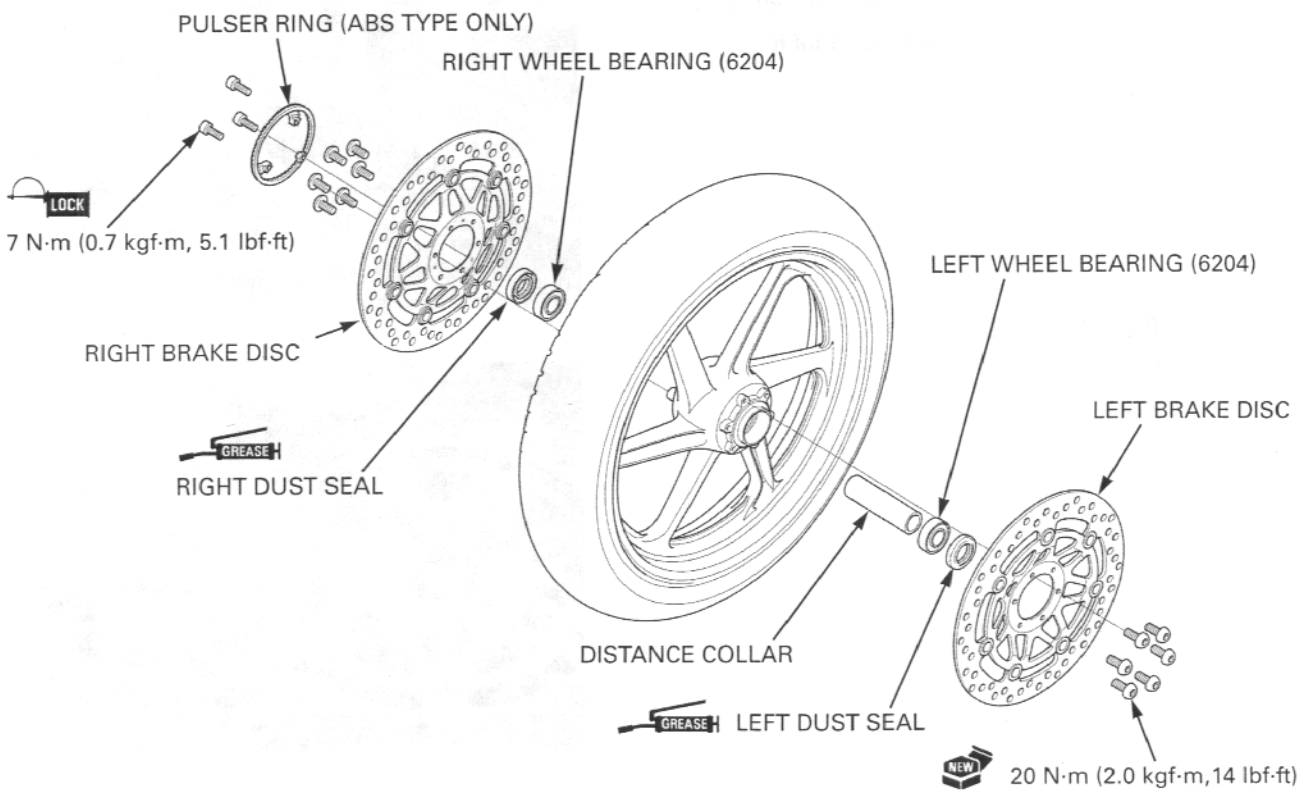

Never install the old bearings. Once the bearings have been removed, the bearings must be replaced with new ones.

Drive in a new right bearing squarely.
Install the distance collar, then drive in the left bearing using the special tool.

TOOLS:

Driver	**07749-0010000**
Attachment, 42 X 47 mm	**07746-0010300**
Pilot, 20 mm	**07746-0040500**

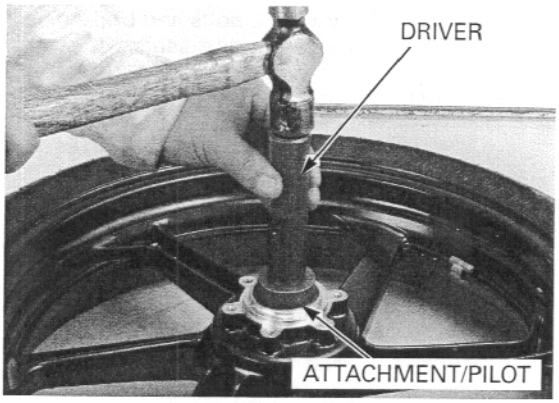

Do not get grease on the brake discs or stopping power will be reduced.

Install the brake discs on the wheel hub.
Install and tighten the new mounting bolts to the specified torque.

TORQUE: 20 N·m (2.0 kgf·m, 14 lbf·ft)

Apply grease to the dust seal lips, then install them into the wheel hub.

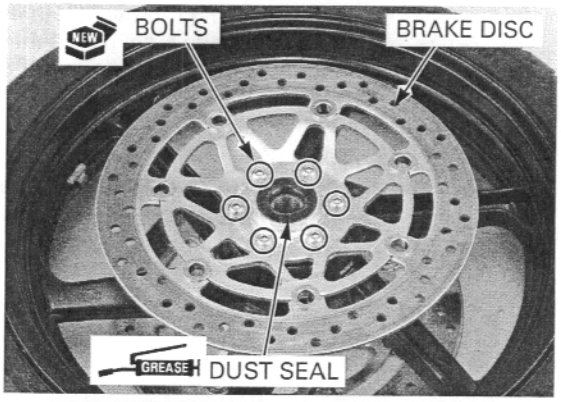

ABS type only:

Apply a locking agent to the front pulser ring mounting bolt threads.
Install the front pulser ring onto the right brake disc, then tighten the bolts to the specified torque.

TORQUE: 7 N·m (0.7 kgf·m, 5.1 lbf·ft)

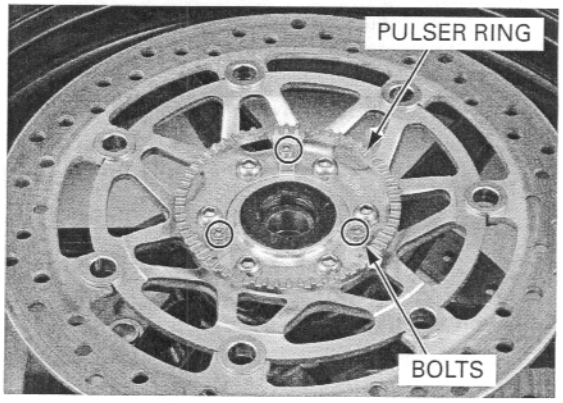

INSTALLATION

Install the side collars.

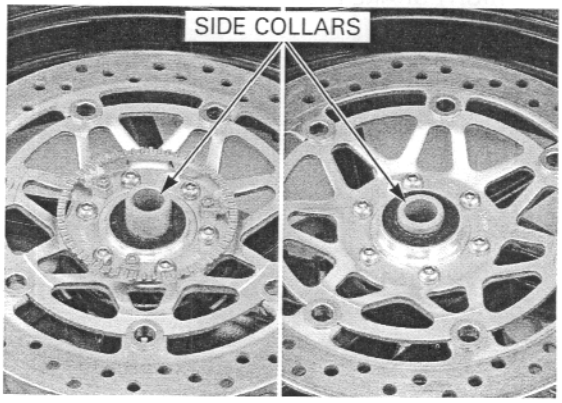

Install the front wheel between the fork legs.

Apply a thin layer of grease to the front axle surface. Install the front axle from the left side.

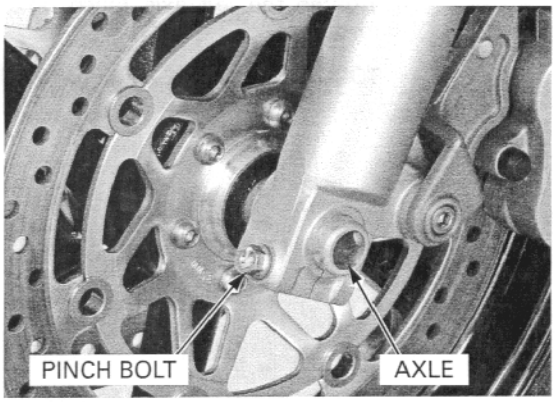

Hold the axle and tighten the axle bolt to the specified torque.

TORQUE: 59 N·m (6.0 kgf·m, 43 lbf·ft)

Tighten the right axle pinch bolt to the specified torque.

TORQUE: 22 N·m (2.2 kgf·m, 16 lbf·ft)

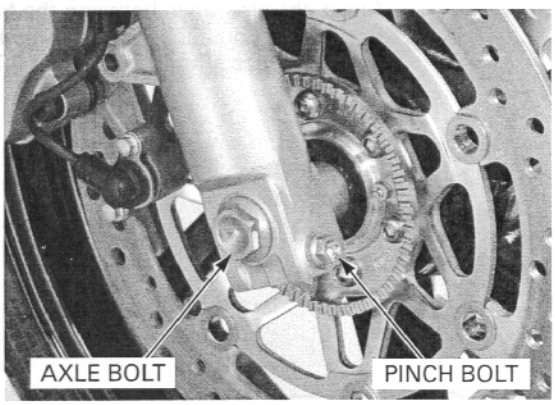

Install the right brake caliper and tighten the new mounting bolts to the specified torque.

TORQUE: 31 N·m (3.2 kgf·m, 23 lbf·ft)

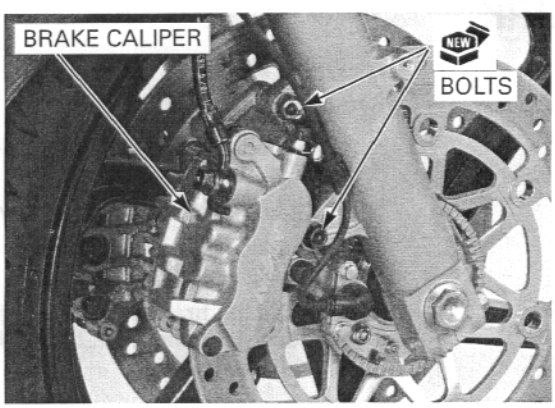

With the front brake applied, pump the fork up and down several times to seat the axle and check brake operation by applying the brake lever and pedal.

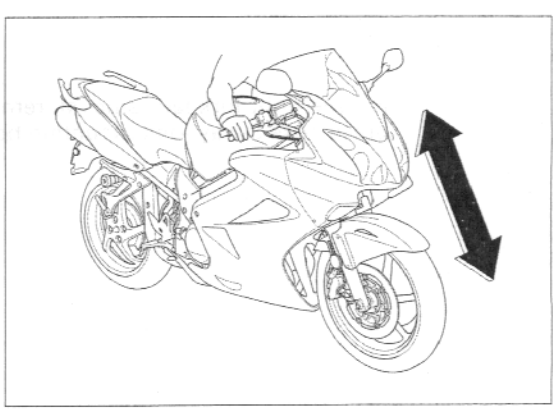

Tighten the left axle pinch bolts to the specified torque.

TORQUE: 22 N·m (2.2 kgf·m, 16 lbf·ft)

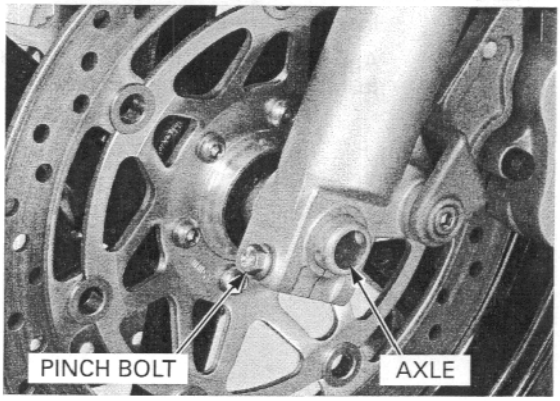

Check the clearance between the brake disc and caliper bracket on each side after installation.
The clearance should be at least 0.7 mm (0.03 in).

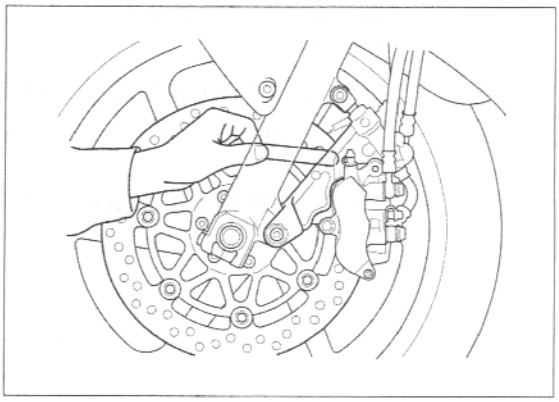

FORK

REMOVAL

Remove the following:

- Remove the front wheel (page 13-11)
- Handlebars (page 13-5).

For the left fork leg removal, remove the following:

- Left brake caliper pivot bolt
- Left brake caliper bolt (second master joint)

Support the left brake caliper with a piece of wire so that it does not hang from the brake hoses. Do not twist the brake hose.

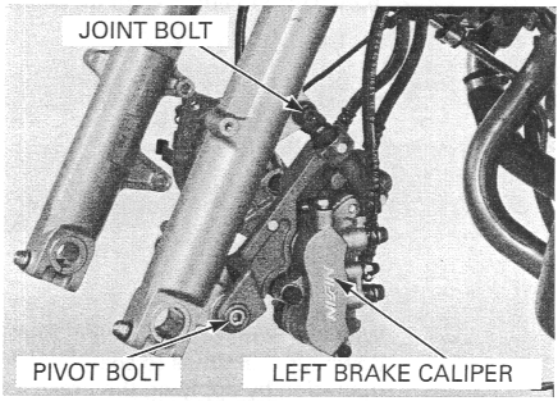

For the right fork leg removal, remove the bolt and brake hose 3-way joint mounting bolt.

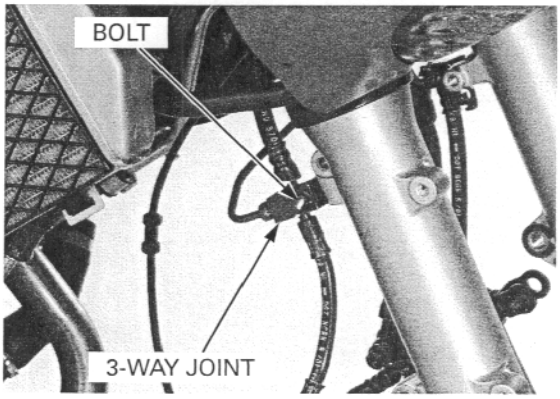

Remove the throttle cable wire band.

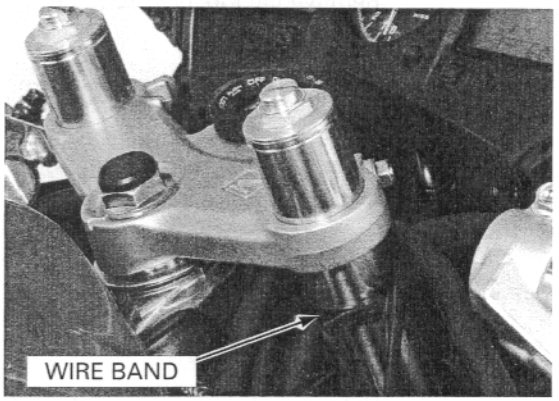

Loosen the fork top pinch bolt.

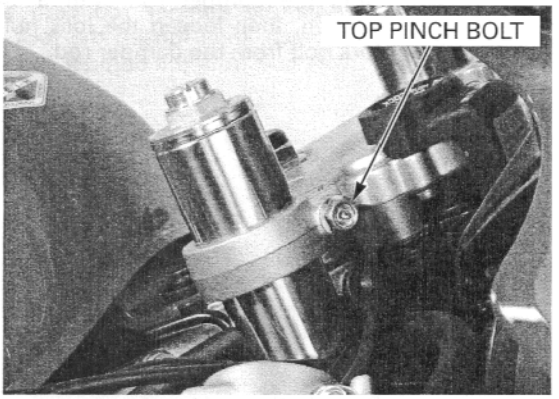

Loosen the fork bottom pinch bolt and remove the fork from the fork top bridge and steering stem.

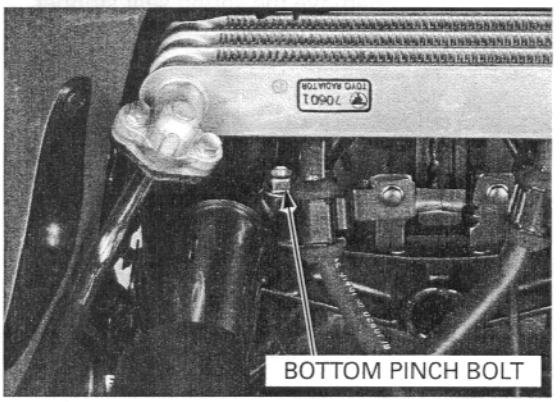

DISASSEMBLY

Be careful not to scratch the fork pipe or damage the dust seal.

Remove the fork protector by plying it carefully using a screwdriver.

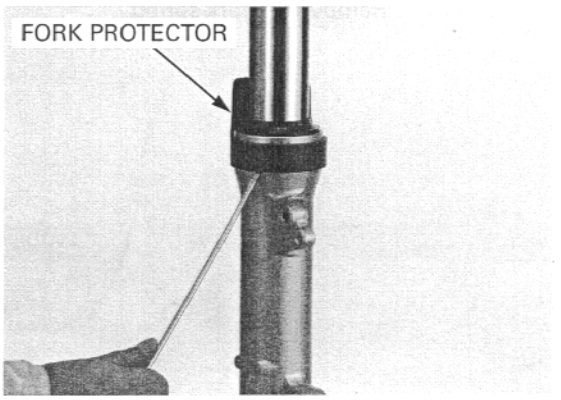

Remove the fork bolt from the fork pipe.

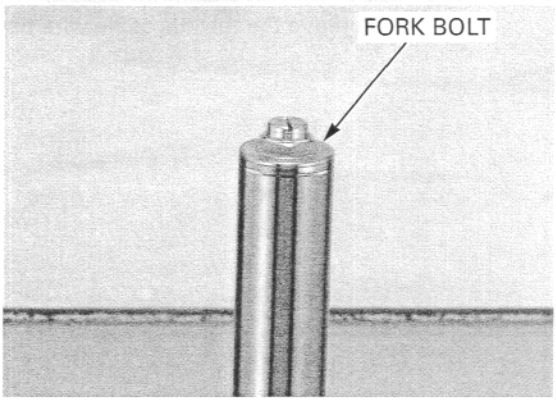

Hold the damper rod with a 14 mm open end wrench, then loosen the lock nut and remove the fork bolt from the damper rod.

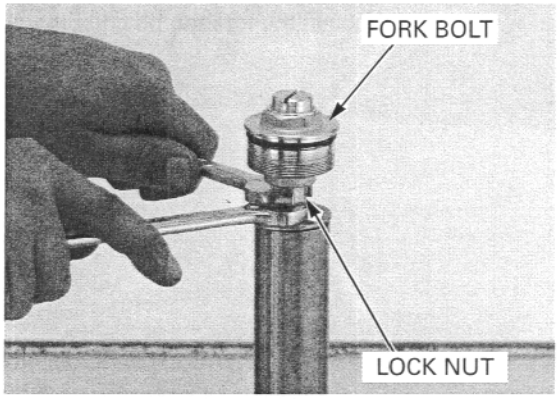

Remove the spring seat stopper.

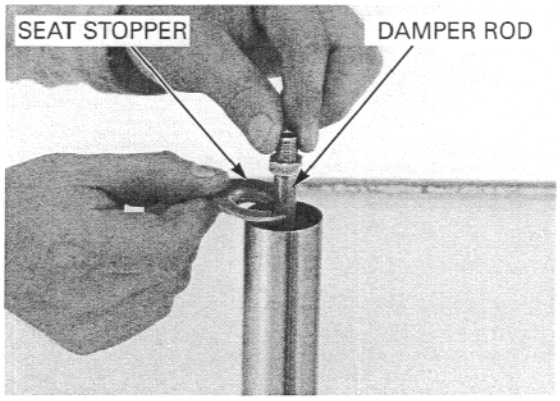

Remove the spring collar and spring seat.

Remove the fork spring

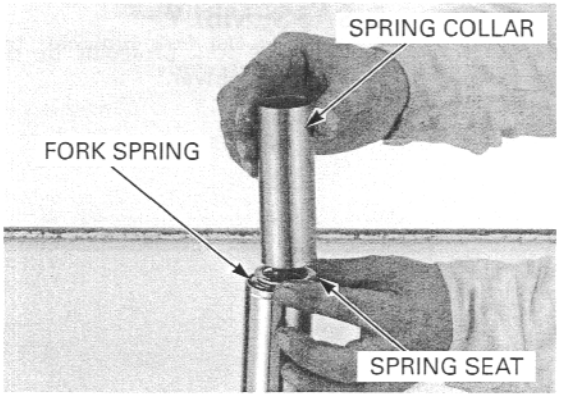

Pour out the fork fluid by pumping the fork pipe several times.
Pour out the fork fluid from the fork damper by pumping the damper rod several times.

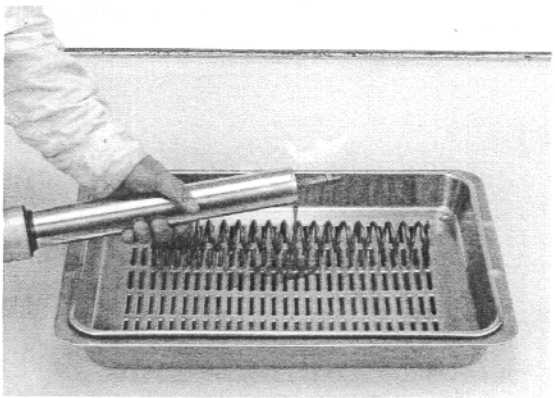

Hold the fork slider in a vice with soft jaws or a shop towel.

Remove the fork socket bolt and sealing washer.

If the fork damper turns together with the socket bolt, temporarily install the fork spring, spring seat, collar, spring seat stopper and fork bolt.

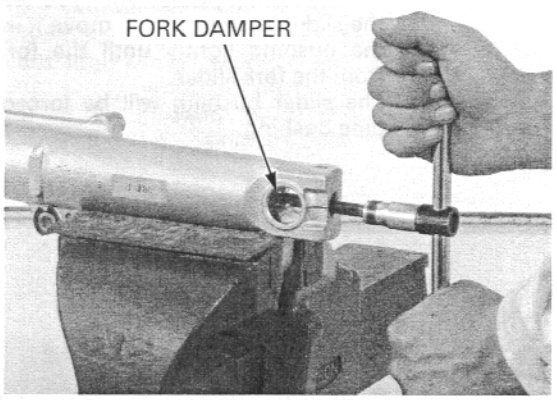

Remove the fork damper assembly and oil lock piece from the fork pipe.

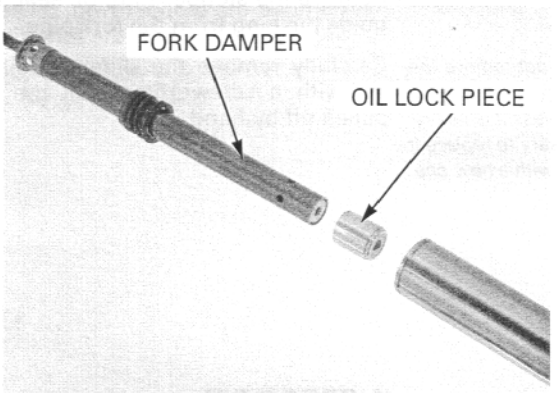

Remove the dust seal.

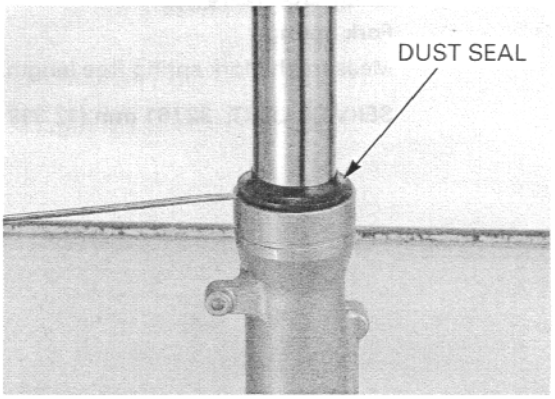

Do not scratch the fork pipe sliding surface.

Remove the oil seal stopper ring.

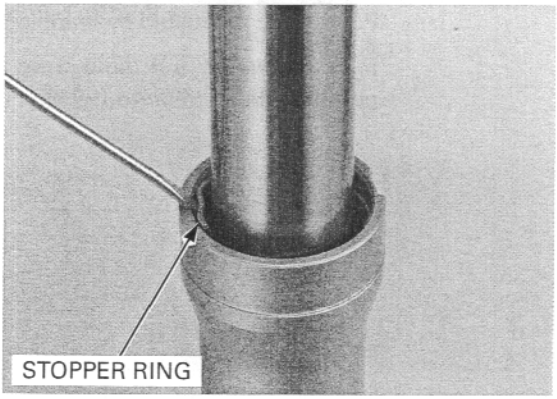

Pull the fork pipe out until you feel resistance from the slider bushing. Then move it in and out, tapping the bushing lightly until the fork pipe separates from the fork slider.
The slider bushing will be forced out by the fork pipe bushing.

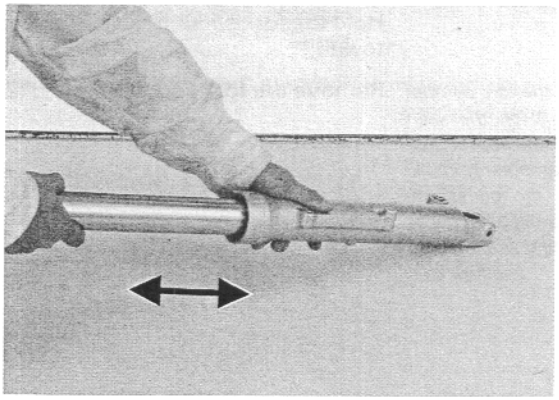

Remove the stopper ring, oil seal, back-up ring and guide bushing from the fork pipe.

Do not remove the slider bushing unless it is necessary to replace it with a new one.

Carefully remove the slider bushing by prying the slit with a screwdriver until the bushing can be pulled off by hand.

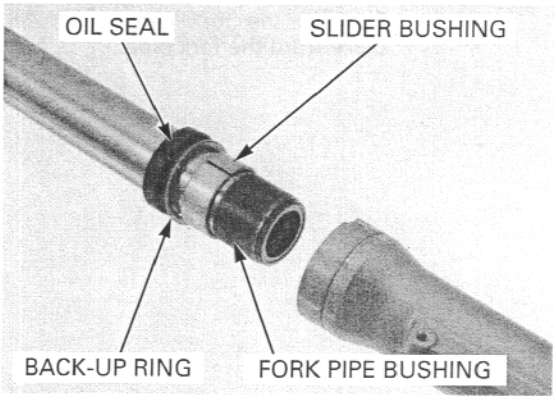

INSPECTION

Fork Spring

Measure the fork spring free length.

SERVICE LIMIT: 327.61 mm (12.898 in)

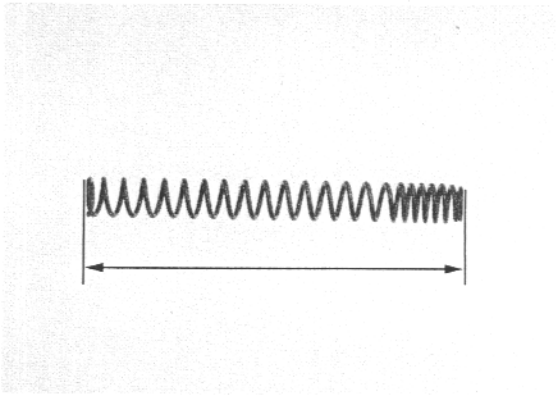

Fork Pipe/Slider/Damper

Check the fork pipe and fork slider for score marks, scratches, or excessive or abnormal wear.
Replace any components which are worn or damaged.

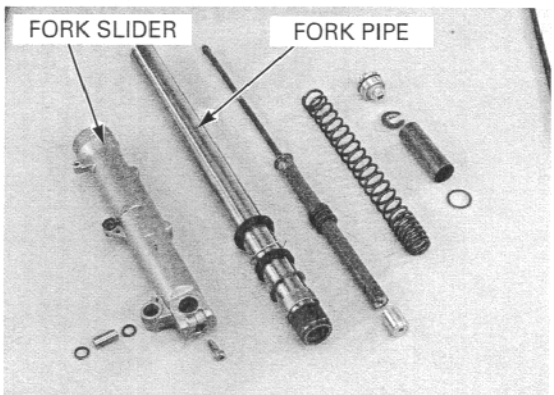

Check the fork damper for damage.
Check the oil lock valve for wear or damage.

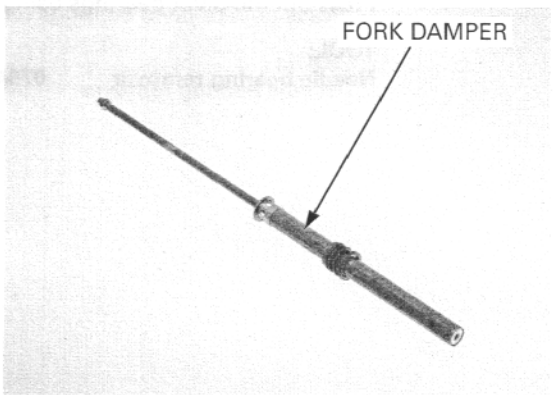

Place the fork pipe in V-block and measure the runout.
Actual runout is 1/2 the total indicator reading.

Replace the fork damper assembly, if any component is damaged.

SERVICE LIMIT: 0.20 mm (0.008 in)

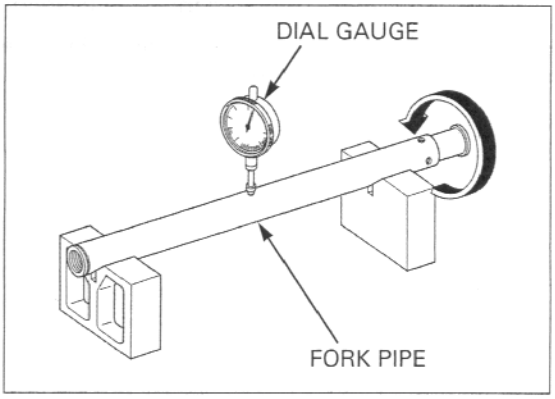

Fork Tube Bushing

Visually inspect the slider and fork tube bushings. Replace the bushings if there is excessive scoring or scratching, or if the teflon is worn so that the copper surface appears on more than 3/4 of the entire surface.

Check the back-up ring; replace it if there is any distortion at the points shown.

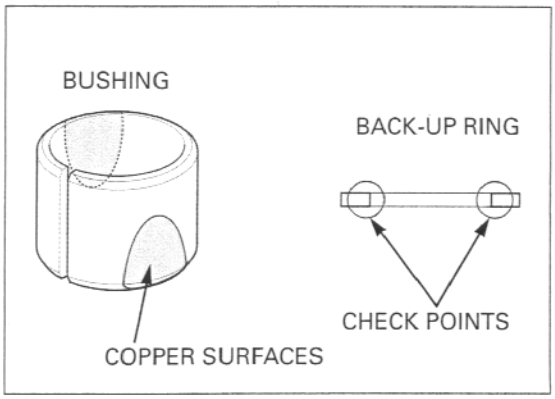

Brake Caliper Pivot Bearing Replacement

Remove the dust seals and pivot collar.

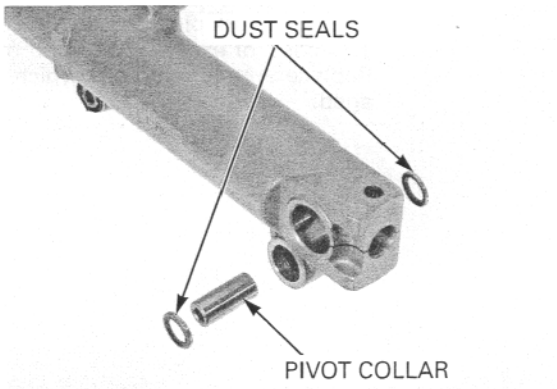

Press out the pivot bearings using the special tool.

TOOL:
Needle bearing remover 07946-KA50000

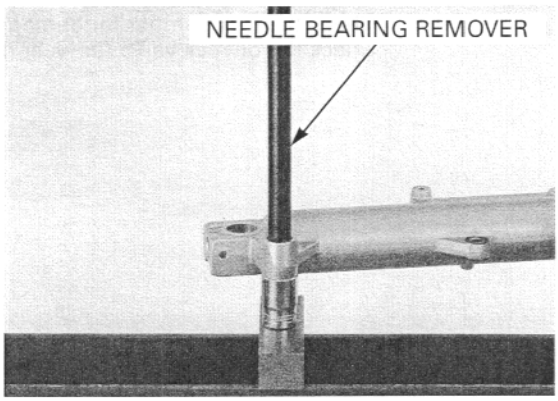

Apply grease to the pivot bearing.

Install the bearing so that the bearing cage is 5.5 mm (0.22 in) from the pivot surface.

Press the needle bearing into the fork slider using the same tool.

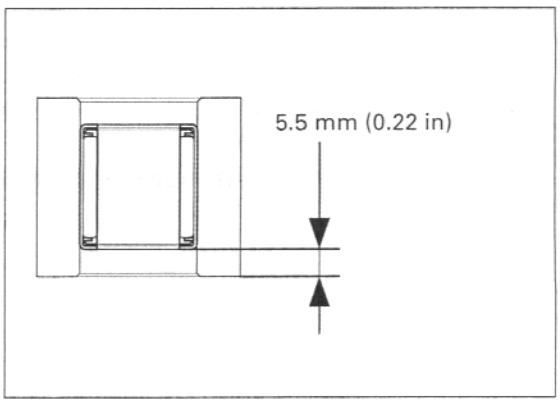

Apply grease to the new dust seal lips.
Install the dust seal and pivot collar.

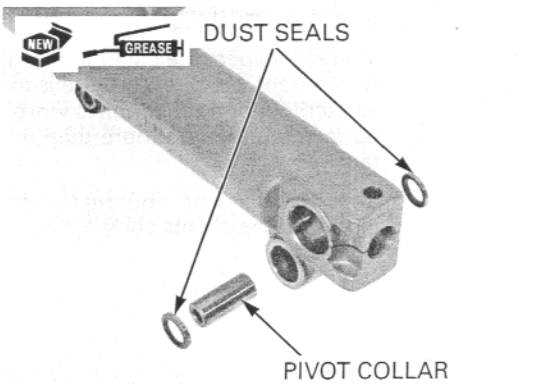

ASSEMBLY

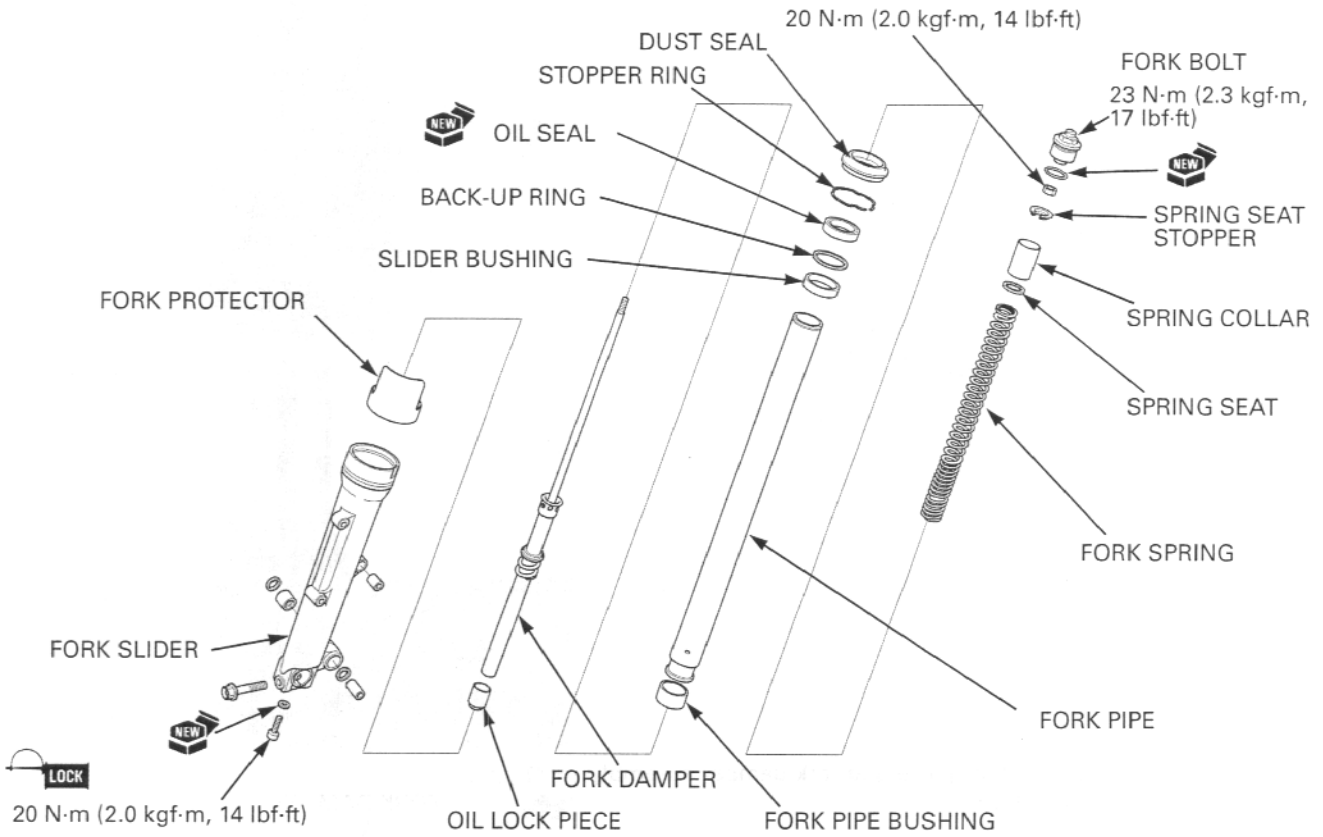

Before assembly, wash all parts with a high flash or non-flammable solvent and wipe them dry.

Do not open the bushing slit more than necessary.

Install the new fork pipe bushing being careful not to damage the coating of the bushing if it has been removed.

Remove the burrs from the bushing mating surface, being careful not to peel off the coating.

Install the oil seal with its marked side facing up.

Install the slider bushing, back-up ring and new oil seal onto the fork slider.

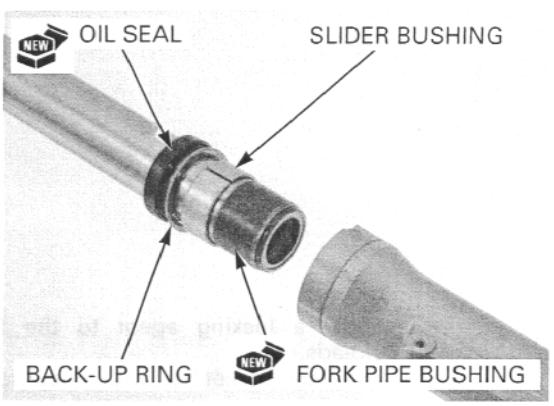

Drive the oil seal in using the special tools.

TOOLS:

Fork seal driver weight	**07947-KF00100**
Fork seal driver attachment	**07947-KA40200**

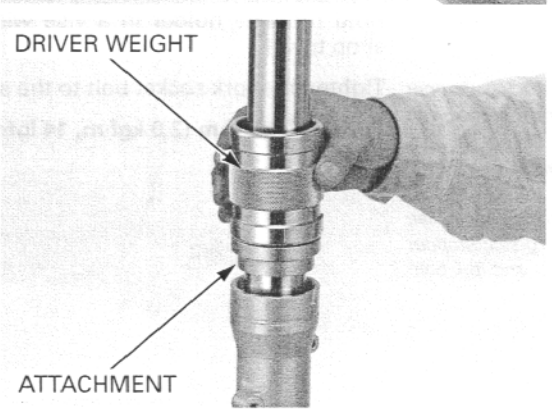

Install the stopper ring into the fork slider groove securely.

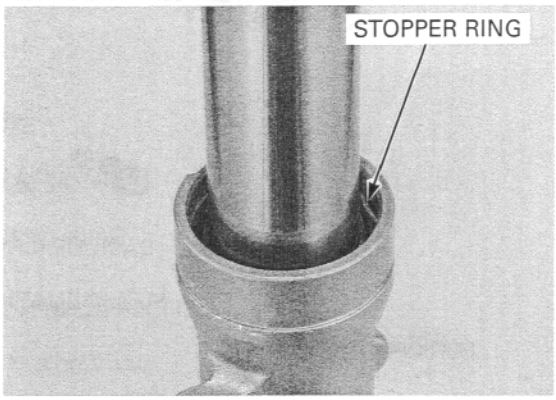

Install the dust seal.

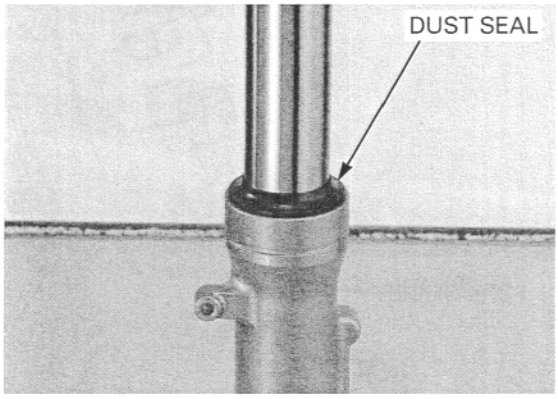

Install the oil lock piece and fork damper assembly into the fork pipe.

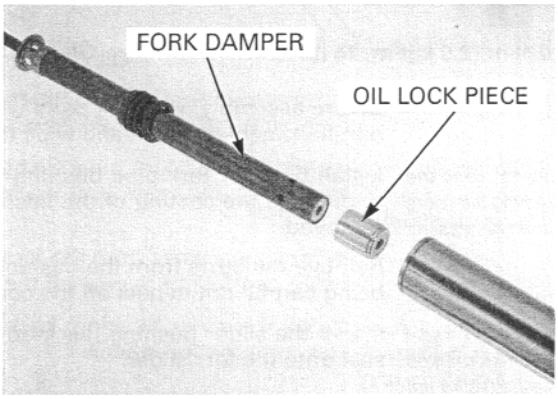

Apply a locking agent to the fork socket bolt threads.
Install the socket bolt with a new sealing washer.

Hold the axle holder in a vise with soft jaws or a shop towel.

If the fork damper turns together with the socket bolt, temporarily install the fork spring, spring seat, collar, spring seat stopper and fork bolt.

Tighten the fork socket bolt to the specified torque.

TORQUE: 20 N·m (2.0 kgf·m, 14 lbf·ft)



Pour the specified amount of recommended fork fluid into the fork pipe.

RECOMMENDED FORK FLUID: Pro Honda Suspension Fluid SS-8

FORK FLUID CAPACITY:
544 ± 2.5 cm³ (18.4 ± 0.08 US oz, 19.1 ± 0.09 Imp oz)

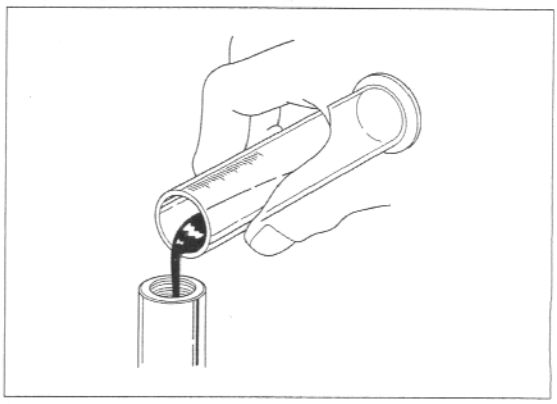

Pump the damper rod several times until the fork fluids flow out of the oil hole in the rebound damping adjuster.
Slowly pump the fork pipe several times to remove the trapped air.

Compress the fork pipe slowly.

Be sure the oil level is the same in the both forks.

Measure the oil level from the top of the fork pipe.

FORK OIL LEVEL: 100 mm (3.9 in)

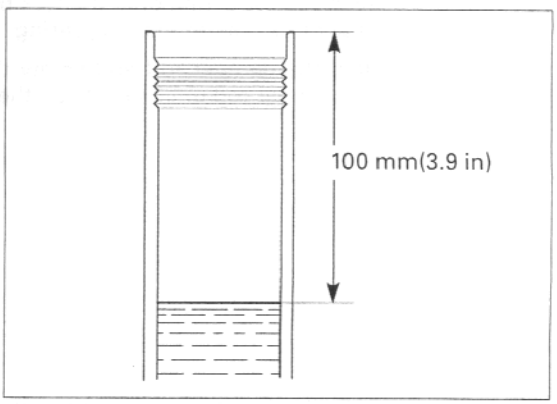

Pull the damper rod up and install the fork spring with the tapered end facing up.

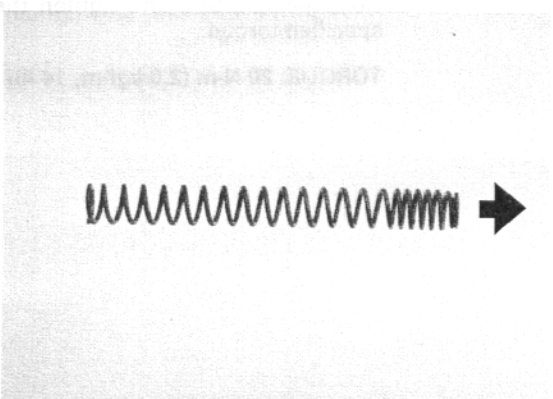

Remove the following:

- Spring seat
- Spring collar

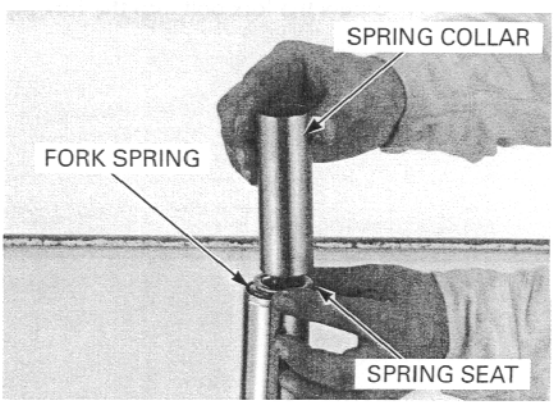

Screw the damper rod lock nut down fully by hand.

Install the spring seat stopper.

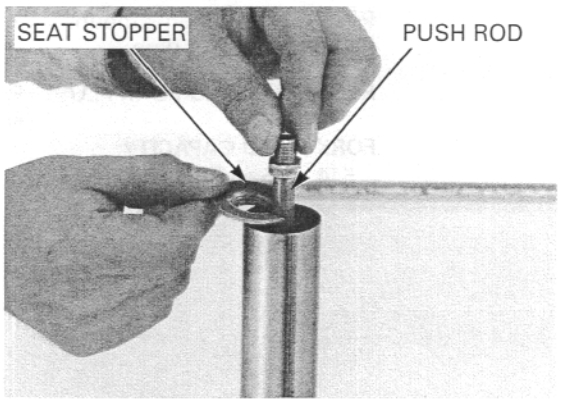

Install a new O-ring onto the fork bolt.
Apply fork fluid to the new O-ring.

Hold the damper rod and screw the fork bolt onto the damper rod until it seats on the damper rod lock nut.

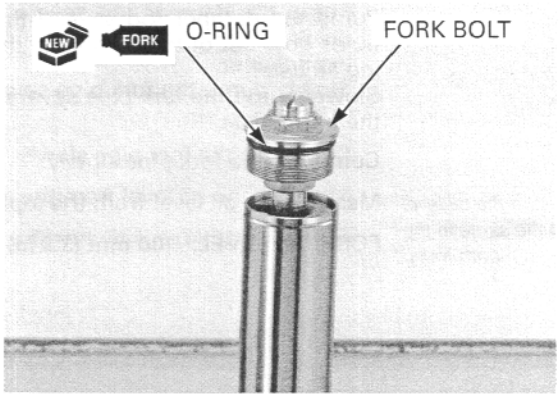

Hold the fork bolt and tighten the lock nut to the specified torque.

TORQUE: 20 N·m (2.0 kgf·m, 14 lbf·ft)

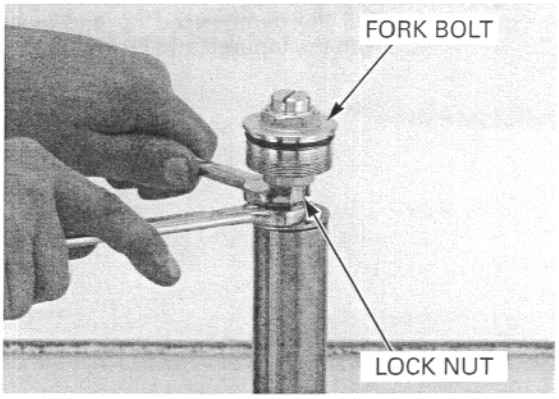

Screw the fork bolt into the fork pipe.

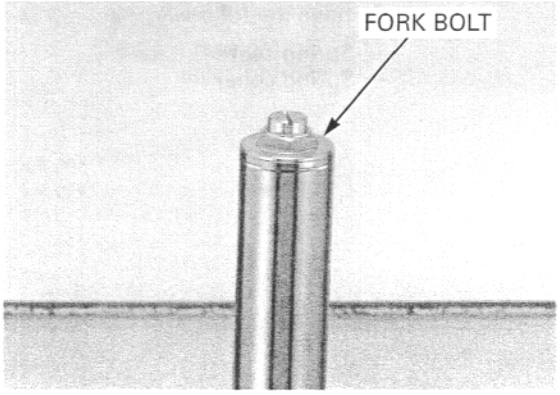

Install the fork protector onto the fork slider aligning the protector boss with the groove in the fork slider.

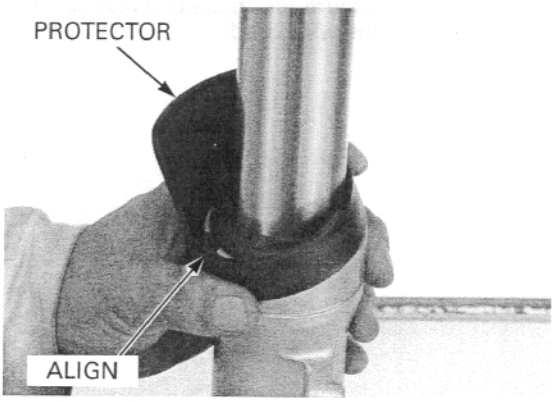

INSTALLATION

Install the fork leg through the bottom bridge and top bridge so that the height from the top bridge upper surface to the fork tube end is 41 mm (1.6 in).

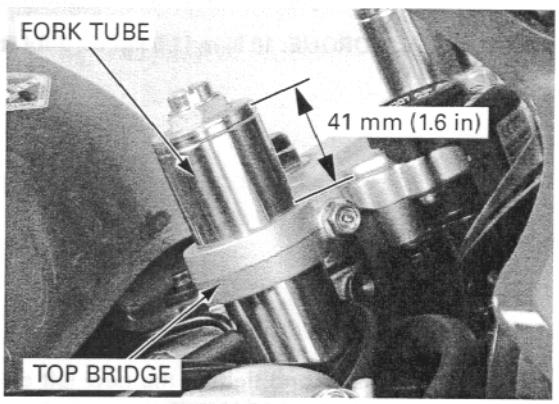

Tighten the bottom bridge pinch bolt to the specified torque.

TORQUE: 49 N·m (5.0 kgf·m, 36 lbf·ft)

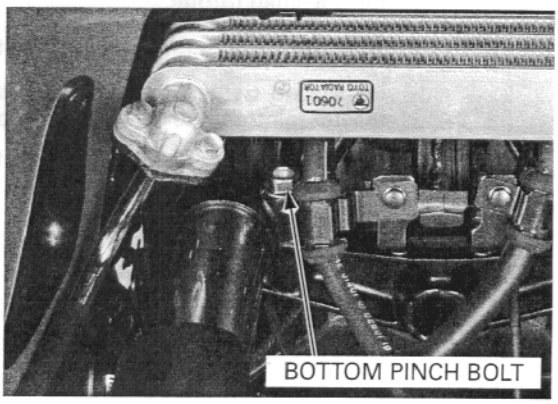

Tighten the top bridge pinch bolt to the specified torque.

TORQUE: 23 N·m (2.3 kgf·m, 17 lbf·ft)

Tighten the fork bolt to the specified torque if it was removed.

TORQUE: 23 N·m (2.3 kgf·m, 17 lbf·ft)

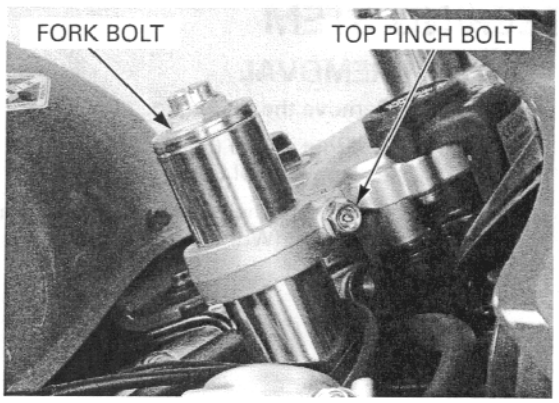

Secure the throttle cables to the right fork leg with the wire band.

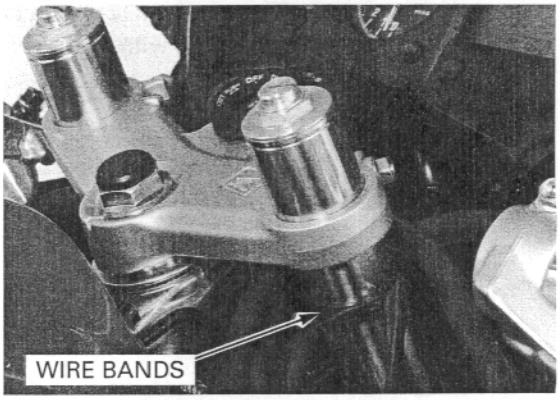

Install the brake hose 3-way joint to the left fork leg and tighten the bolt to the specified torque.

TORQUE: 10 N·m (1.0 kgf·m, 7 lbf·ft)

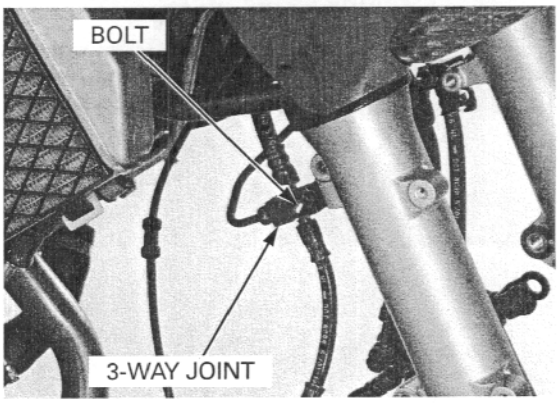

Install and tighten the new left caliper pivot bolt to the specified torque.

TORQUE: 31 N·m (3.2 kgf·m, 23 lbf·ft)

Install and tighten the new left caliper (secondary master joint) bolt to the specified torque.

TORQUE: 31 N·m (3.2 kgf·m, 23 lbf·ft)

Install the following:

- Front wheel (page 13-16)
- Handlebar (page 13-7)

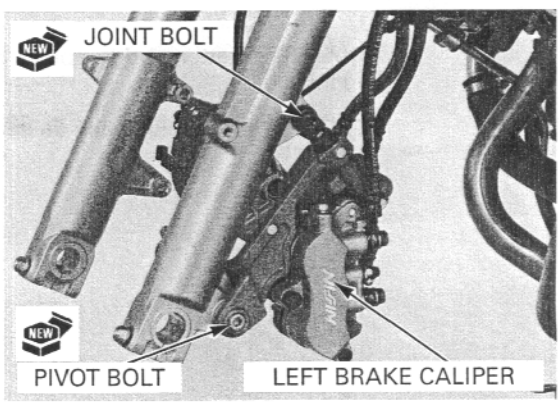

STEERING STEM

REMOVAL

Remove the following:

- Front wheel (page 13-11)
- Upper cowl (page 2-12)

Release the wire band and disconnect the ignition switch 4P (White) connector.

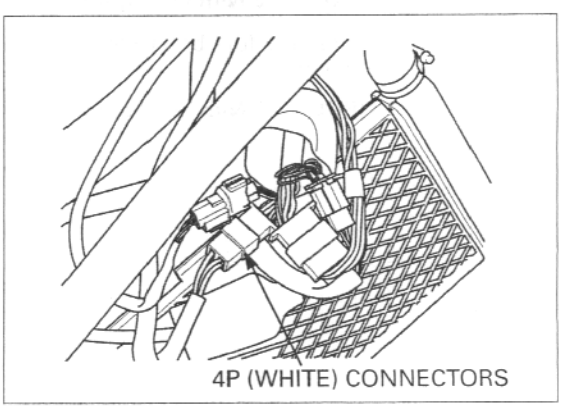

Remove the bolts and front brake hose bracket.

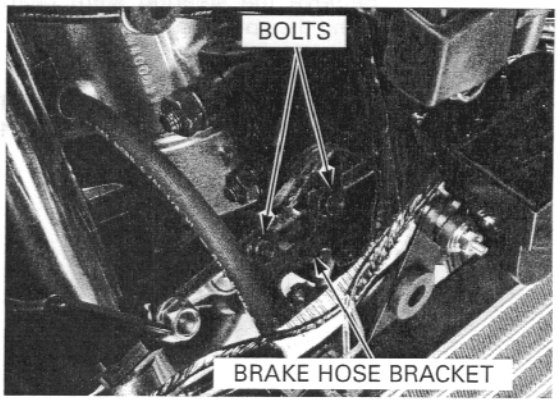

Remove the steering stem nut cap.

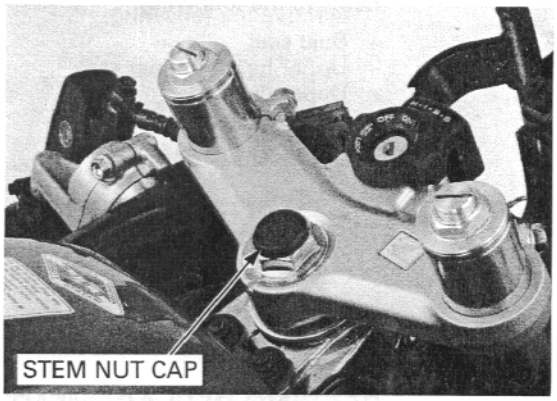

Remove the stem nut and the top bridge.

Remove the following:
- Handlebars (page 13-5)
- Fork legs (page 13-18)

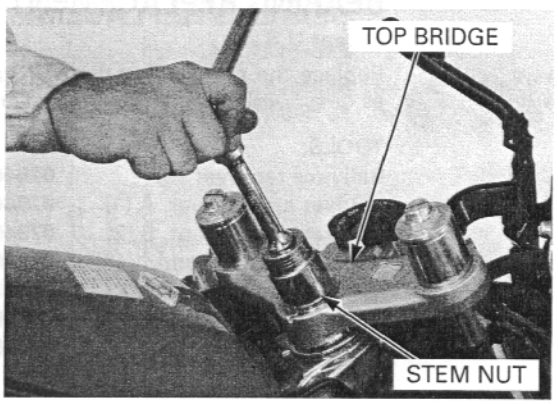

Straighten the tabs of the lock washer.

Remove the steering bearing adjusting nut lock nut and lock washer.

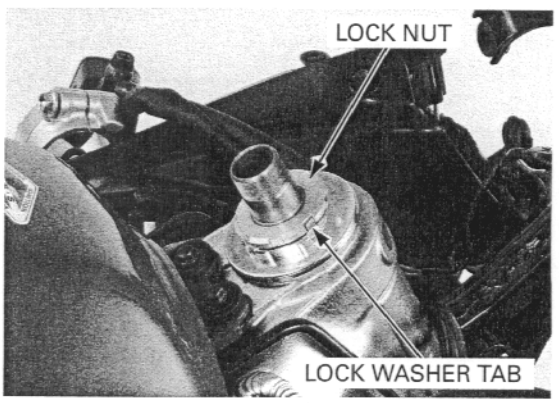

Remove the steering stem bearing adjusting nut using the special tool.

TOOL:

Steering stem socket	**07916-3710101 or 07916-3710100**

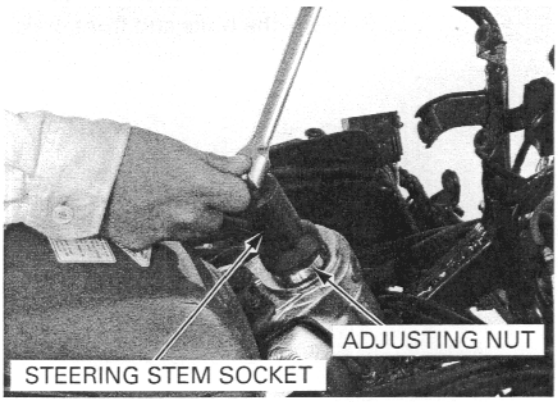

Remove the following:

- Dust seal
- Upper bearing inner race
- Upper bearing
- Steering stem
- Lower bearing

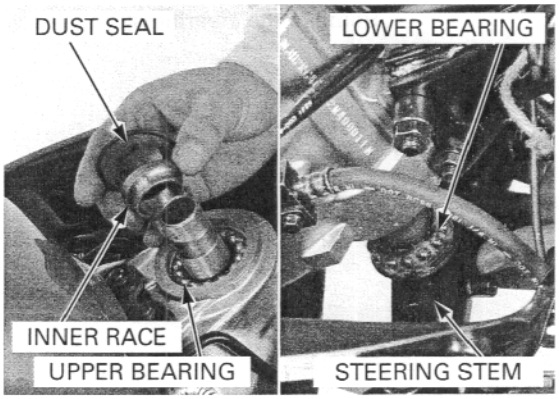

BEARING REPLACEMENT

Except U.S.A.

Always replace the bearings and races as a set.

Replace the races using the Ball Race Remover Set as described in the following procedure.

TOOLS:

Ball race remover set	**07946-KM90001**
– Driver attachment, A (1)	**07946-KM90100**
– Driver attachment, B (2)	**07946-KM90200**
– Driver shaft assembly (3)	**07946-KM90300**
– Bearing remover, A (4)	**07946-KM90401**
– Bearing remover, B (5)	**07946-KM90500**
– Assembly base (6)	**07946-KM90600**

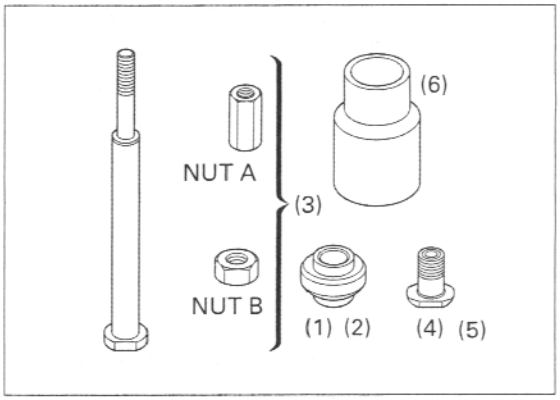

Note the installation direction of the assembly base.

Install the ball race remover into the head pipe as shown.

Align bearing remover A with the groove in the steering head.
Lightly tighten nut B with a wrench.

While holding the driver shaft with a wrench, turn nut A gradually to remove the upper bearing outer race.

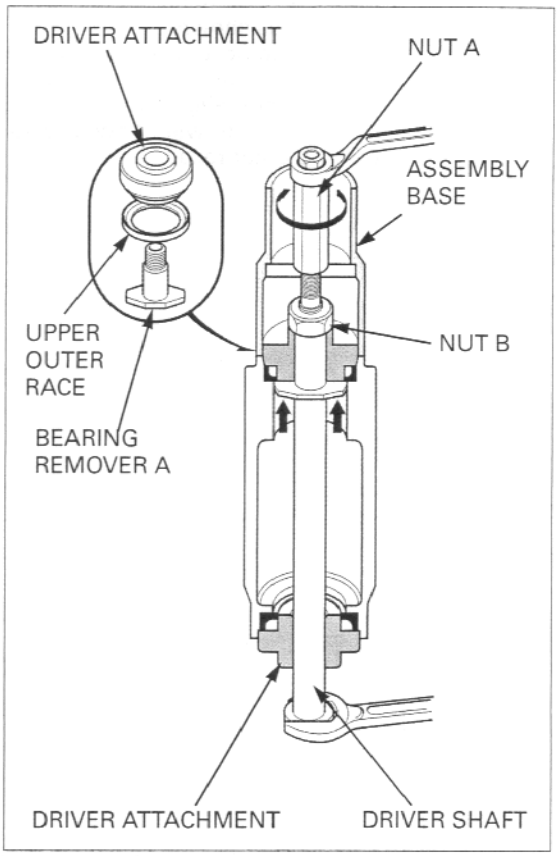

Note the installation direction of the assembly base.

Install the ball race remover into the steering head pipe as shown.
Align bearing remover B with the groove in the steering head.
Lightly tighten nut B.
While holding the driver shaft, turn nut A gradually to remove the lower bearing outer race.

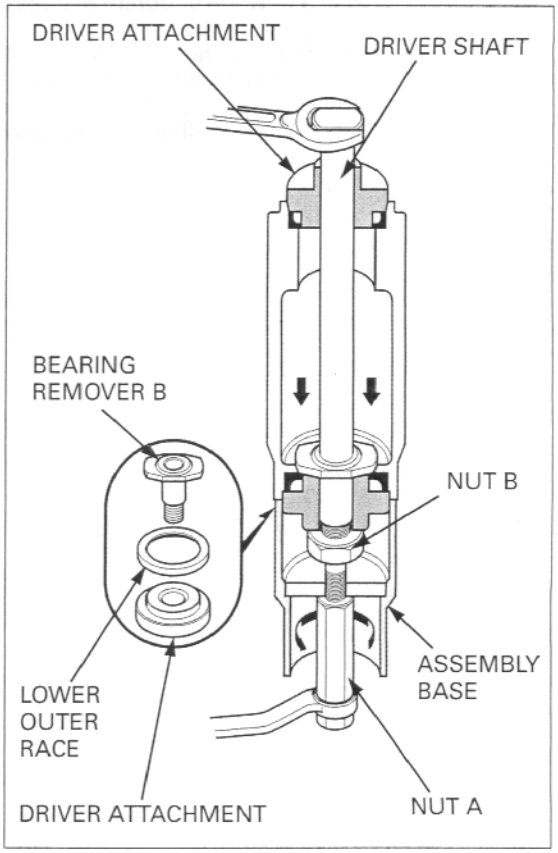

Install a new upper outer race and the ball race remover as shown.
While holding the driver shaft with a wrench and turn nut A gradually until the groove in driver attachment A aligns with the upper end of the steering head. This will allow you to install the upper bearing outer race.

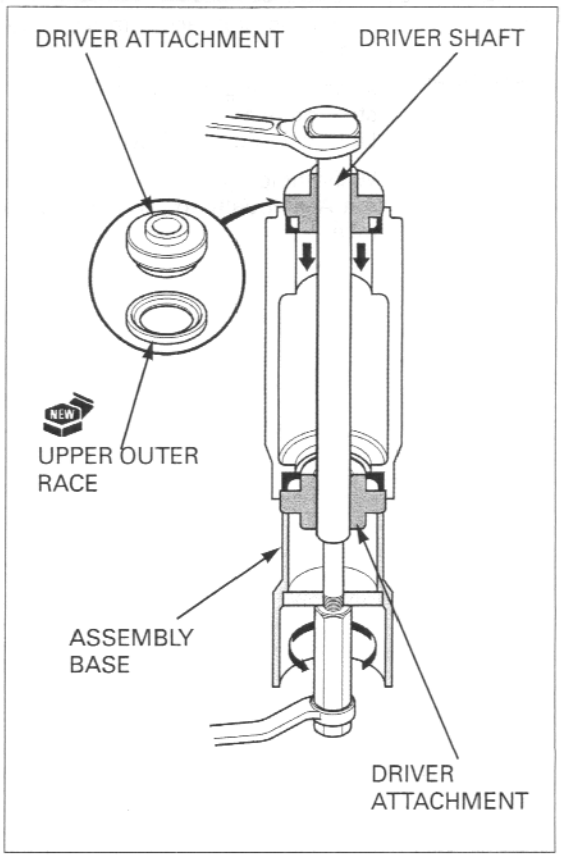

Install a new lower outer race and ball race remover as shown.
While holding the driver shaft with a wrench, turn nut A gradually until the groove in driver attachment B aligns with the lower end of the steering head. This will allow the installation of the lower bearing outer race.

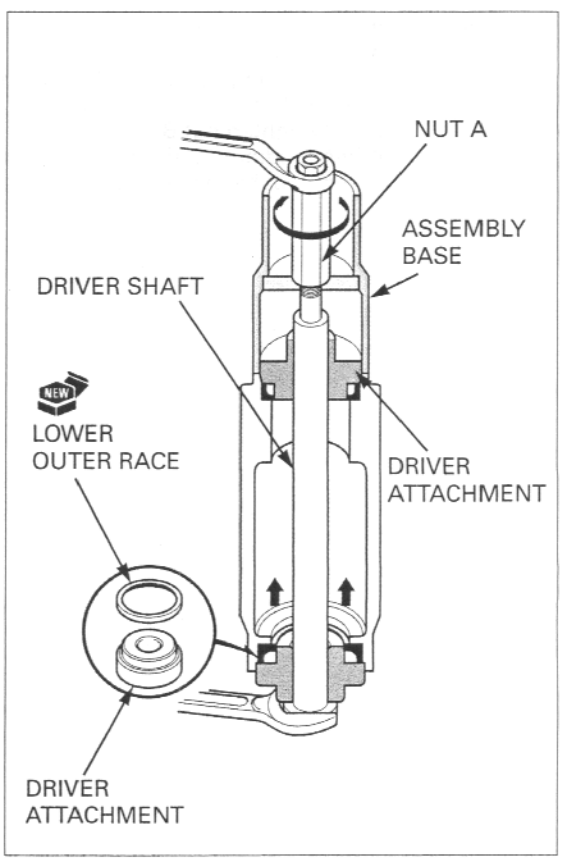

U.S.A. only:

Place the steering head bearing outer races using the special tools listed below.

TOOLS:

Main bearing driver attachment	**07946-ME90200**
Fork seal driver weight	**07947-KA50100**
Oil seal driver	**07965-MA60000**
Installer shaft	**07VMF-KZ30200**
Installer attachment A	**07VMF-MAT0100**
Installer attachment B	**07VMF-MAT0200**
Remover attachment A	**07VMF-MAT0300**
Remover attachment B	**07VMF-MAT0400**

Install the special tools into the steering head pipe as shown.
Align remover attachment A with the groove in the steering head.
While holding the installer shaft with the wrench, turn the upper nut gradually to remove the upper bearing outer race.

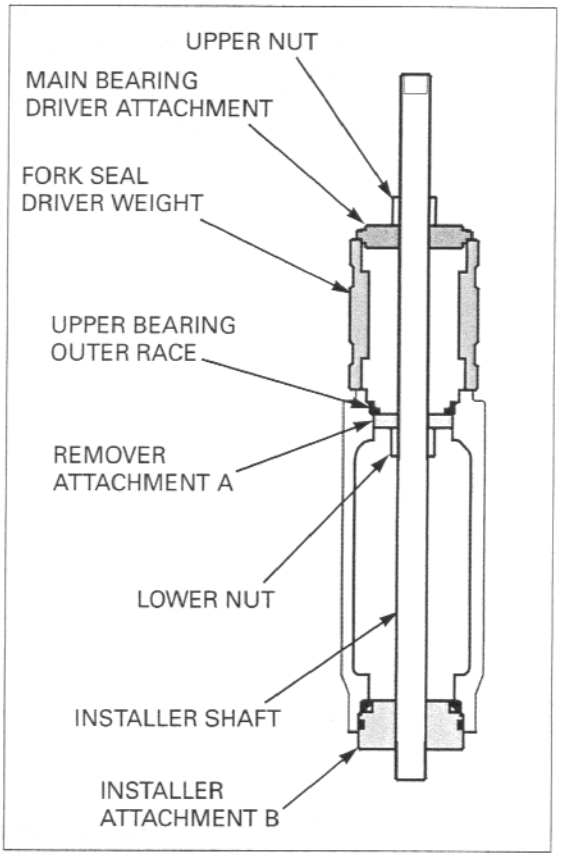

Install the special tools into the steering head pipe as shown.
Align remover attachment B with the groove in the steering head.
While holding the installer shaft with the wrench, turn the lower nut gradually to remove the lower bearing outer race.

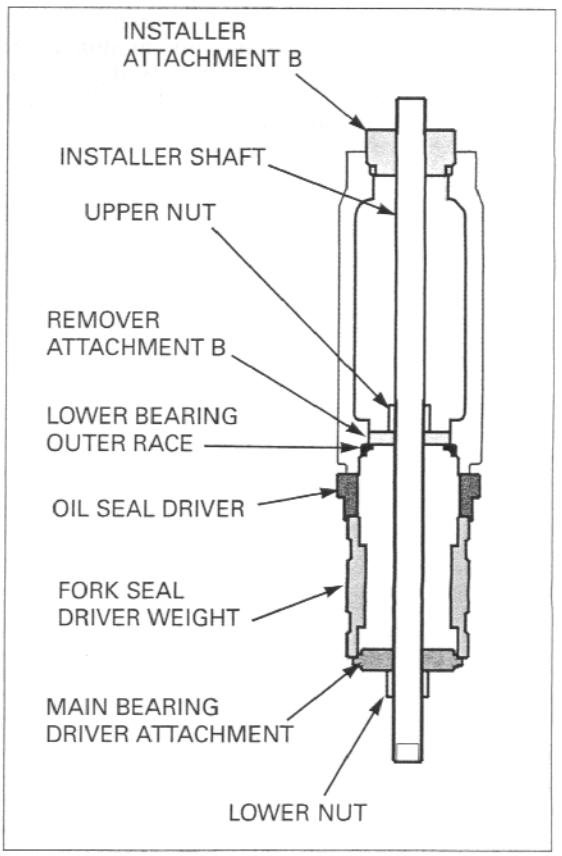

Install a new upper bearing outer race and the special tools as shown.
While holding the installer shaft with the wrench, turn the lower nut gradually until the groove in installer attachment A aligns with the upper end of the steering head. This will allow you to install the upper bearing outer race.

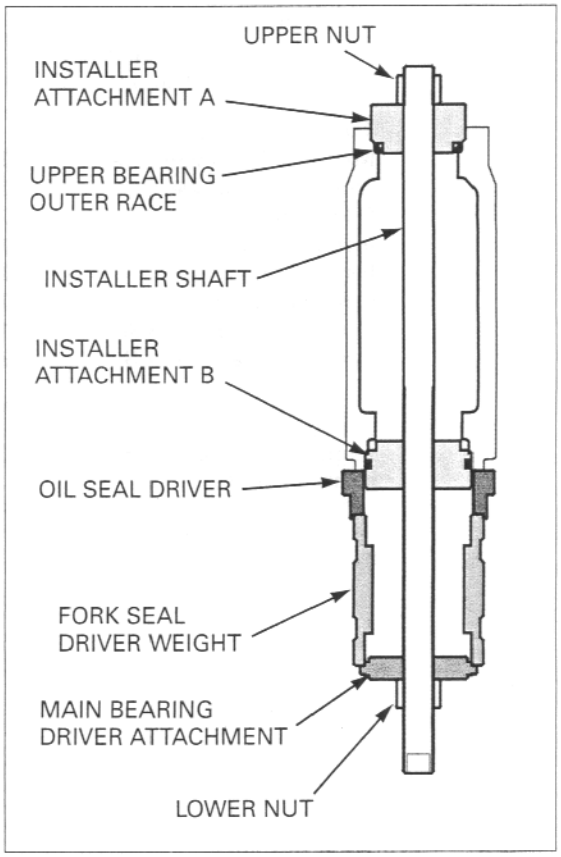

Install a new lower bearing outer race and the special tools as shown.
While holding the installer shaft with the wrench, turn the upper nut gradually until the groove in installer attachment B aligns with the lower end of the steering head. This will allow the installation of the lower bearing outer race.

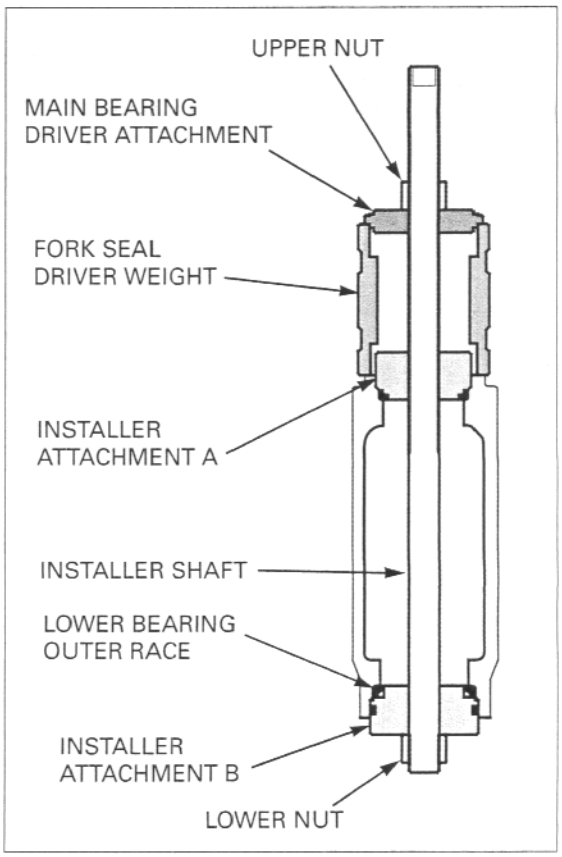

Temporarily install the steering stem nut onto the stem to prevent the threads from being damaged when removing the lower bearing inner race from the stem.

Remove the lower bearing inner race with a chisel or equivalent tool, being careful not to damage the stem.
Remove the dust seal.

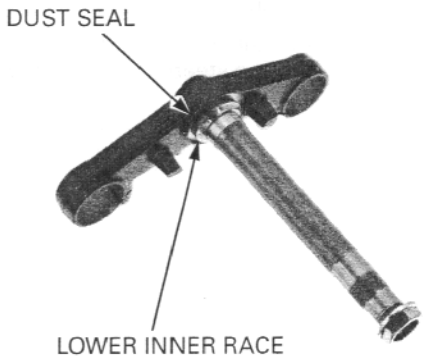

Apply grease to a new dust seal lips and install it over the steering stem.
Install a new lower bearing inner race using a special tool and a hydraulic press.

TOOL:
Steering stem driver **07946-MB00000**

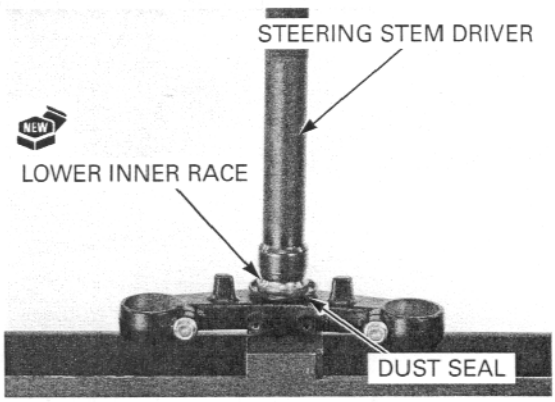

INSTALLATION

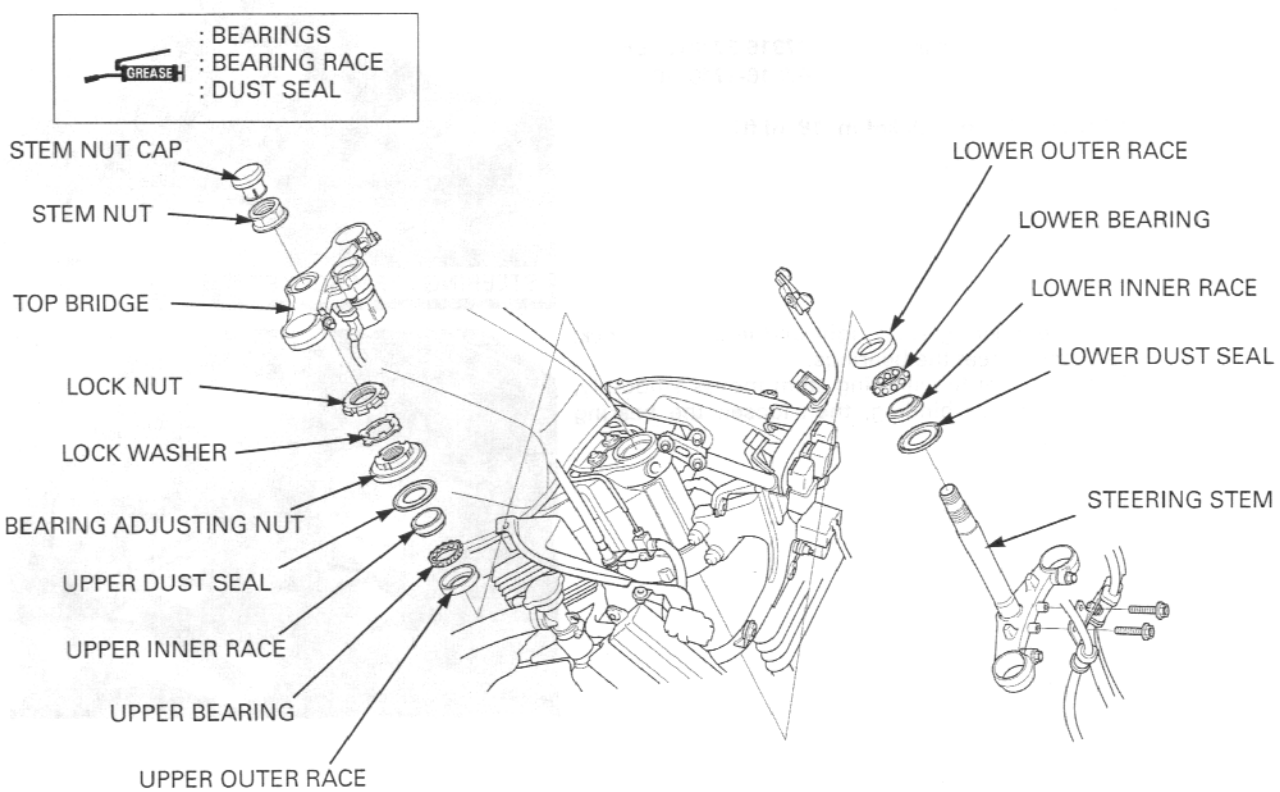

Apply grease to upper and lower bearings and bearing races.

Install the lower bearing onto the steering stem.
Insert the steering stem into the steering head pipe.

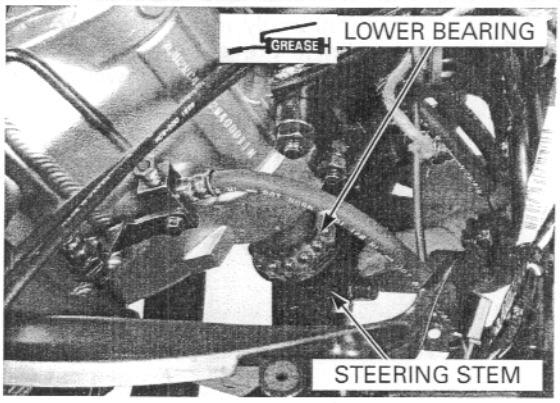

Install upper bearing, inner race and dust seal.

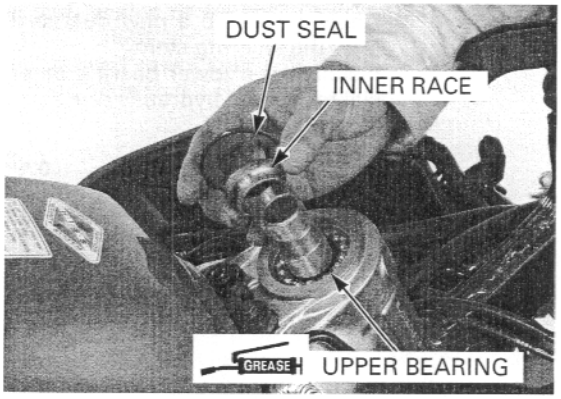

Apply oil to the bearing adjusting nut threads.
Install and tighten the stem bearing adjusting nut to the initial torque.

TOOL:

Steering stem socket	**07916-3710101 or 07916-3710100**

TORQUE: 25 N·m (2.5 kgf·m, 18 lbf·ft)

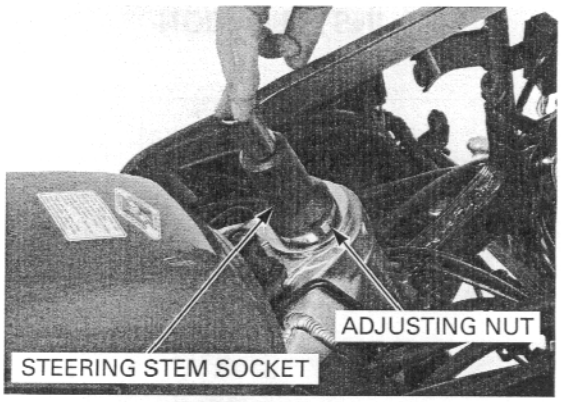

Move the steering stem right and left, lock-to-lock, five times to seat the bearings.
Make sure that the steering stem moves smoothly, without play or binding; then loosen the bearing adjusting nut.

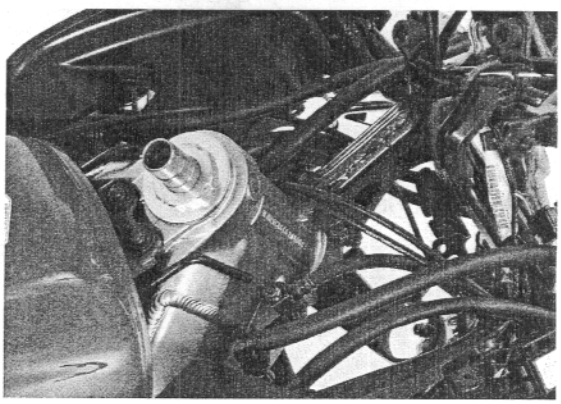

Retighten the bearing adjusting nut to the specified torque.

TORQUE: 25 N·m (2.5 kgf·m, 18 lbf·ft)

Recheck that the steering stem moves smoothly without play or binding.

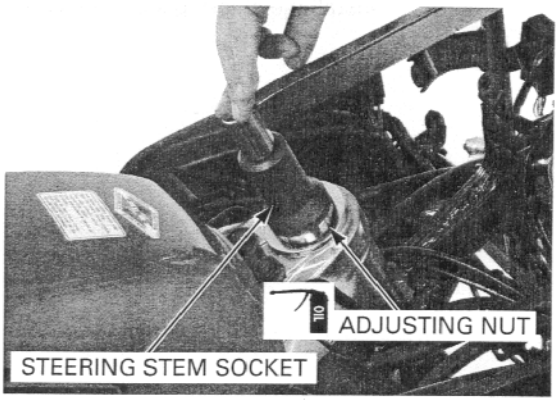

Install the new lock washer onto the steering stem.

Align the tabs of the lock washer with the grooves in the adjusting nut and bend two opposite tabs (shorter) down into the adjusting nut groove.

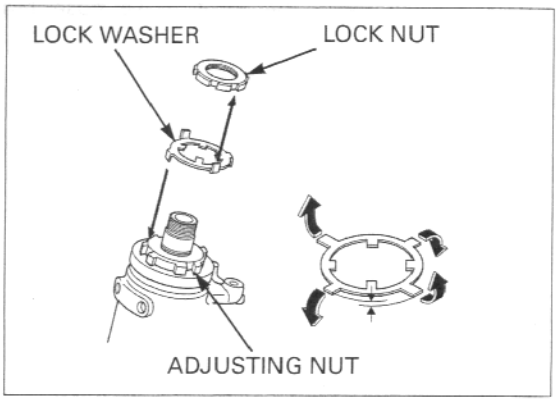

Install and finger tighten the lock nut.
Hold the lock nut and further tighten the lock nut within 1/4 turn (90°) enough to align its grooves with the lock washer tabs.

Bend the lock washer tabs up into the lock nut groove.

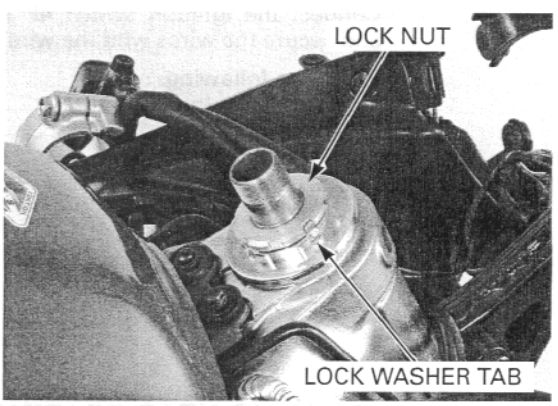

Install the following:

- Handlebar (page 13-7)
- Fork legs (page 13-29)

Install the top bridge and steering stem nut.
Tighten the steering stem nut to the specified torque.

TORQUE: 103 N·m (10.5 kgf·m, 76 lbf·ft)

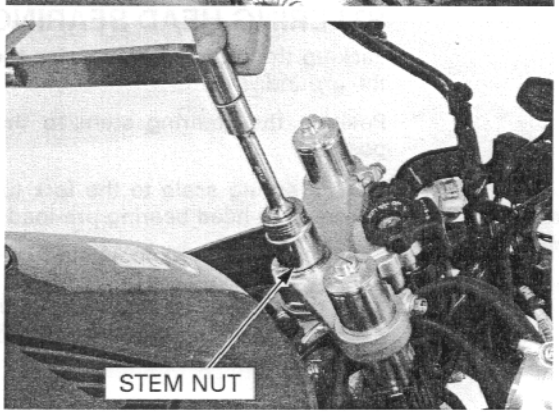

Install the steering stem nut cap.

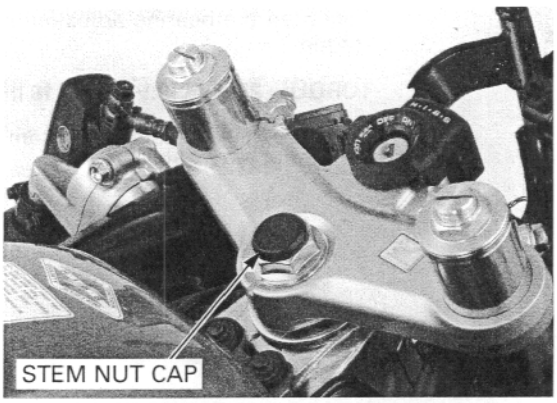

Install the front brake hose bracket, tighten the bolts.

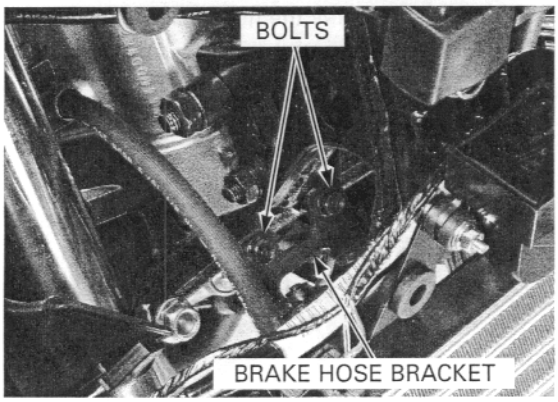

Connect the ignition switch 4P (White) connector and secure the wires with the wire band (page 1-25).

Install the following:
- Front wheel (page 13-16)
- Upper cowl (page 2-14)

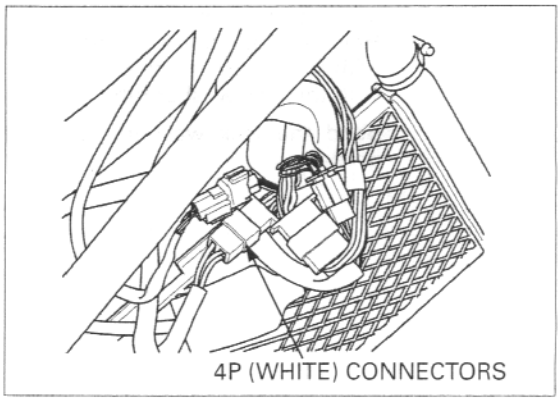

STEERING HEAD BEARING PRE-LOAD

Jack-up the motorcycle to raise the front wheel off the ground.

Position the steering stem to the straight ahead position.

Make sure that there is no cable or wire harness interference.

Hook a spring scale to the fork tube and measure the steering head bearing pre-load.

The pre-load should be within 1.0 – 1.5 kgf (2.2 – 3.3 lbf).
If the readings do not fall within the limits, lower the front wheel to the ground and adjust the steering bearing adjusting nut.

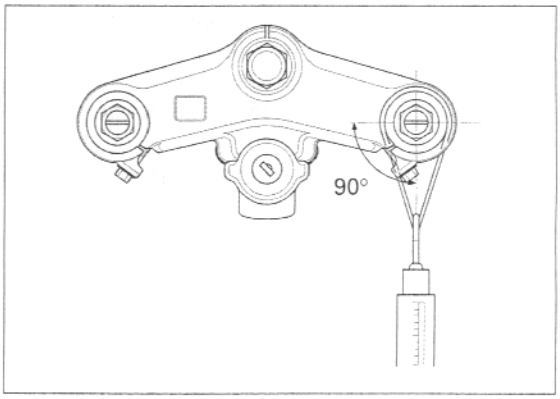

14. REAR WHEEL/SUSPENSION

COMPONENT LOCATION 14-2

SERVICE INFORMATION 14-3

TROUBLESHOOTING 14-4

REAR WHEEL 14-5

REAR AXLE DISASSEMBLY 14-6

BEARING HOLDER 14-10

DRIVEN FLANGE 14-13

REAR AXLE/BRAKE DISC 14-17

REAR AXLE ASSEMBLY 14-18

SUSPENSION LINKAGE 14-24

SHOCK ABSORBER 14-26

SWINGARM 14-31

COMPONENT LOCATION

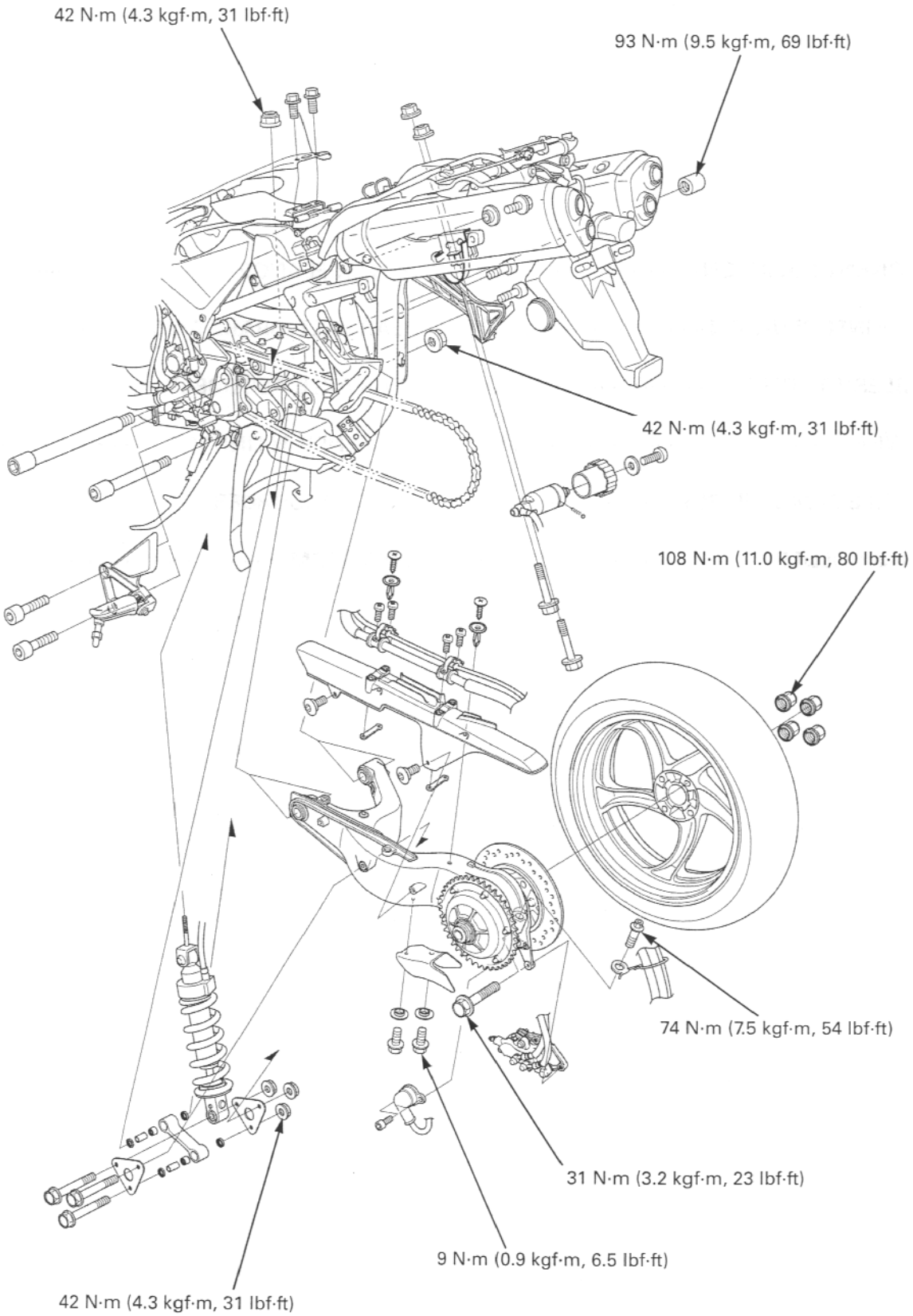

SERVICE INFORMATION

GENERAL

- A contaminated brake disc or pad reduces stopping power. Discard contaminated pads and clean a contaminated disc with a high quality brake degreasing agent.
- After the rear wheel installation, check the brake operation by applying the brake lever and pedal.
- The shock absorber contains nitrogen under high pressure. Do not allow fire or heat near the shock absorber.
- Before disposal of the shock absorber, release the nitrogen (page 14-29).
- When servicing the rear wheel and suspension, support the motorcycle using a safety stand or hoist.
- Use only tires marked "TUBELESS" and tubeless valve stems on rims marked "TUBELESS TIRE APPLICABLE".
- Use genuine Honda replacement bolts and nuts for all suspension pivots and mounting points.
- Refer to the brake system information (page 15-4).

SPECIFICATIONS

Unit: mm (in)

ITEM			STANDARD	SERVICE LIMIT
Minimum tire tread depth			–	2.0 (0.08)
Cold tire pressure	Up to 90 kg (200 lb) load		290 kPa (2.90 kgf/cm^2, 42 psi)	–
	Up to maximum weight capacity		290 kPa (2.90 kgf/cm^2, 42 psi)	–
Axle runout			–	0.2 (0.01)
Wheel rim runout	Radial		–	2.0 (0.08)
	Axial		–	2.0 (0.08)
Wheel balance weight			–	60 g (2.1 oz) max.
Drive chain	Size/link	DID	DID50VA8-110LE	–
		RK	RK50HFOZ5-110LE	–
	Slack		25 – 35 (1 – 1-3/8)	–
Shock absorber	Pre-load adjuster standard position (Standard type)		2nd groove	–
	Pre-load adjuster dial standard position (ABS type)		7 clicks out from lower position	–
	Rebound adjuster initial setting		1-1/4 turns out from full hard	–

TORQUE VALUES

Rear axle nut	201 N·m (20.5 kgf·m, 148 lbf·ft)	Stake Apply oil to the threads and flange surface
Final driven sprocket nut	64 N·m (6.5 kgf·m, 47 lbf·ft)	Apply oil to the threads and flange surface
Rear wheel nut	108 N·m (11.0 kgf·m, 80 lbf·ft)	
Rear brake disc nut	34 N·m (3.5 kgf·m, 25 lbf·ft)	U-nut
Rear brake torque rod bolt	34 N·m (3.5 kgf·m, 25 lbf·ft)	Apply a locking agent to the threads
Swingarm pivot nut	93 N·m (9.5 kgf·m, 69 lbf·ft)	
Drive chain slider flange bolt	9 N·m (0.9 kgf·m, 6.5 lbf·ft)	ALOC bolt: replace with a new one
Axle bearing holder pinch bolt	74 N·m (7.5 kgf·m, 54 lbf·ft)	
Air guide mounting bolt	9 N·m (0.9 kgf·m, 6.5 lbf·ft)	ALOC bolt: replace with a new one
Rear shock absorber mounting nut	42 N·m (4.3 kgf·m, 31 lbf·ft)	U-nut
Shock arm nut (frame side)	42 N·m (4.3 kgf·m, 31 lbf·ft)	U-nut
Shock arm nut (link plate side)	42 N·m (4.3 kgf·m, 31 lbf·ft)	U-nut
Shock link plate-to-swingarm nut	42 N·m (4.3 kgf·m, 31 lbf·ft)	U-nut
Bearing holder stopper bolt	7 N·m (0.7 kgf·m, 5.1 lbf·ft)	Apply a locking agent to the threads
Rear wheel pulser ring mounting bolt (ABS type)	9 N·m (0.9 kgf·m, 6.5 lbf·ft)	Apply a locking agent to the threads
Rear brake caliper mounting bolt	31 N·m (3.2 kgf·m, 23 lbf·ft)	ALOC bolt; replace with a new one
Footpeg bracket bolt	32 N·m (3.3 kgf·m, 24 lbf·ft)	

TOOLS

Socket wrench, 46 mm	07HMJ-MN50100
Driver	07749-0010000
Attachment, 24 X 26 mm	07746-0010700
Attachment, 28 X 30 mm	07946-1870100
Attachment, 37 X 40 mm	07746-0010200
Attachment, 42 X 47 mm	07746-0010300
Attachment, 52 X 55 mm	07746-0010400
Attachment, 62 X 68 mm	07746-0010500
Pilot, 17 mm	07746-0040400
Pilot, 20 mm	07746-0040500
Pilot, 28 mm	07746-0041100
Pilot, 35 mm	07746-0040800
Pilot, 40 mm	07746-0040900
Needle bearing remover	07HMC-MR70100
Driver shaft	07946-MJ00100
Pin driver	07GMD-KT80100
Bearing remover set	07LMC-KV30100
Bearing remover handle	07936-3710100
Bearing remover head	07936-3710600
Remover weight	07741-0010201

TROUBLESHOOTING

Soft suspension
- Weak shock absorber spring
- Incorrect suspension adjustment
- Oil leakage from damper unit
- Insufficient tire pressure

Hard suspension
- Incorrect suspension adjustment
- Damaged rear suspension pivot bearings
- Bent damper rod
- Incorrect swingarm pivot fasteners torque
- Tire pressure too high

Rear wheel wobbling
- Bent rim
- Worn or damaged rear axle bearings
- Faulty rear tire
- Unbalanced rear tire and wheel
- Insufficient rear tire pressure
- Faulty swingarm pivot bearings

Steers to one side or does not track straight
- Bent rear axle

REAR WHEEL

REMOVAL

Support the motorcycle securely on its center stand.

Remove the wheel nuts and rear wheel.

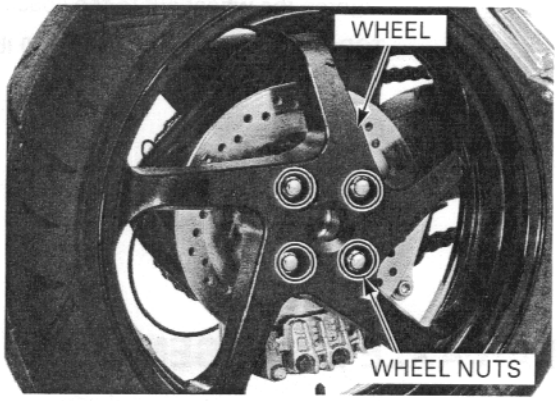

INSPECTION

Wheel rim runout

Check the rim runout by placing the wheel in a truing stand.
Spin the wheel slowly and read the runout using a dial indicator.
Actual runout is 1/2 the total indicator reading.

SERVICE LIMITS:
Radial: 2.0 mm (0.08 in)
Axial: 2.0 mm (0.08 in)

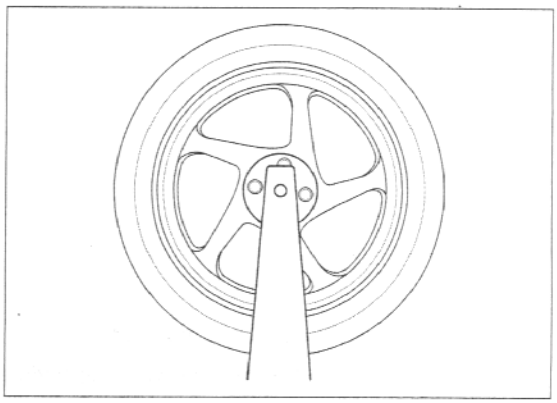

Wheel balance

Refer to the wheel balance servicing (page 13-14).

Wheel bolt hole

Check the wheel bolt holes for wear, cracks or other damage.

Clean the axle hub mating surface of the wheel.

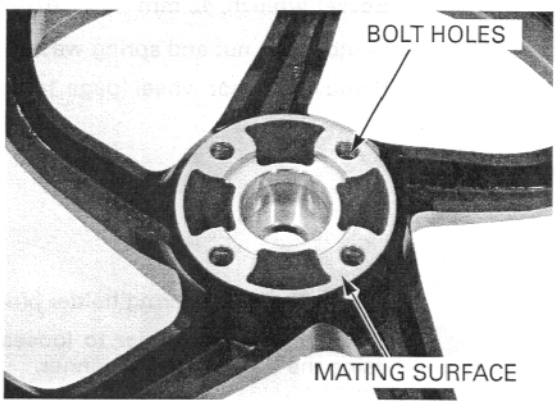

INSTALLATION

Install the rear wheel in the reverse order of removal.

Tighten the wheel nut to the specified torque.

TORQUE: 108 N·m (11.0 kgf·m, 80 lbf·ft)

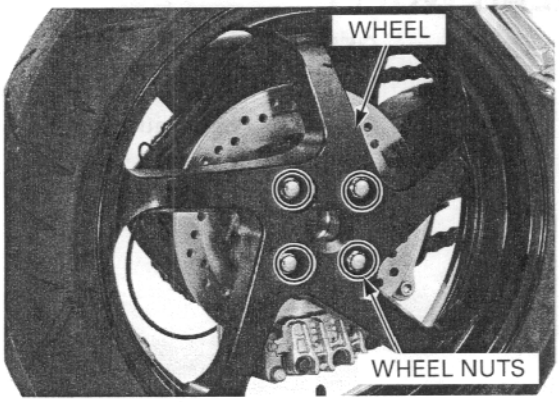

REAR AXLE DISASSEMBLY

Remove the rear axle nut cap.

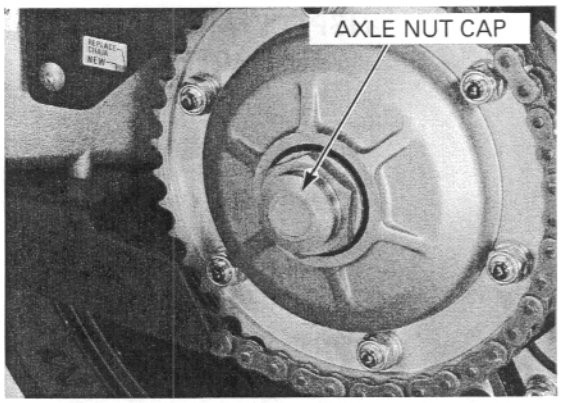

Unstake the rear axle nut.

Loosen the axle nut while applying the rear brake.

TOOL:
Socket wrench, 46 mm 07HMJ-MN50100

Remove the nut and spring washer.

Remove the rear wheel (page 14-5).

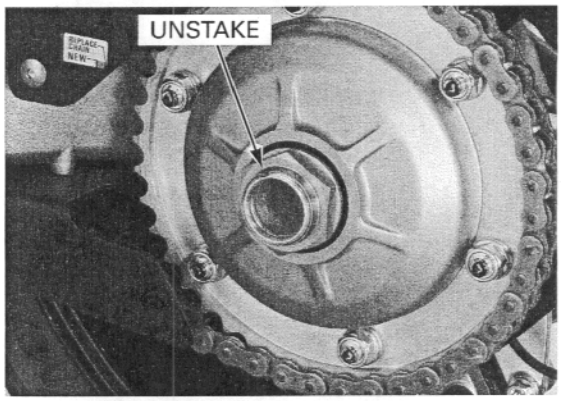

Loosen the axle bearing holder pinch bolt.

Turn the bearing holder to loosen the drive chain using the equipped pin spanner.

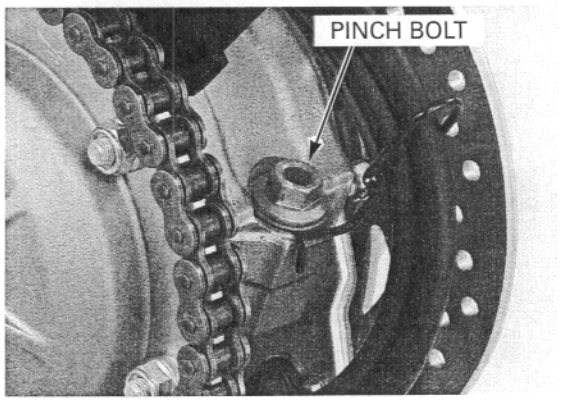

Remove the drive chain case retaining clips.

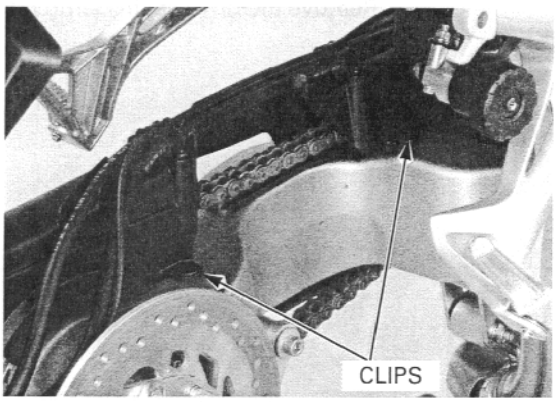

Remove the bolts and left footpeg bracket.

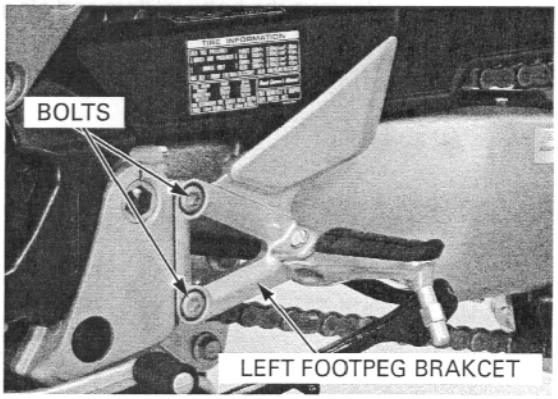

Remove the drive chain case mounting bolts.

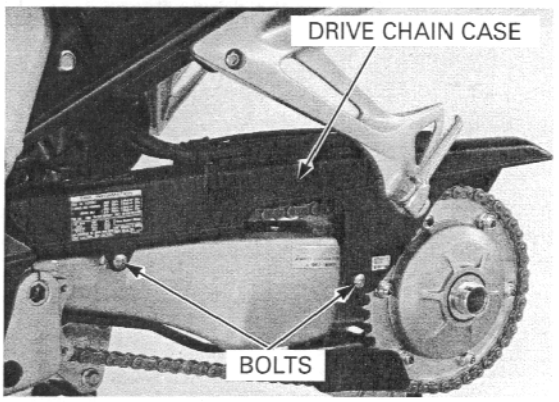

Remove the rear brake hose clamp screws, clamps and brake hoses and rear wheel speed sensor wire from the drive chain case.

Remove the drive chain case.

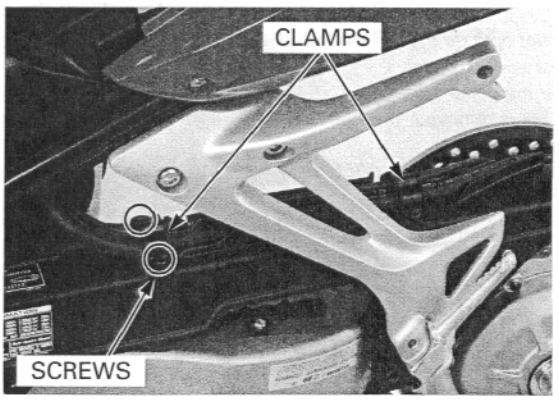

Remove the drive chain clamp retainer.

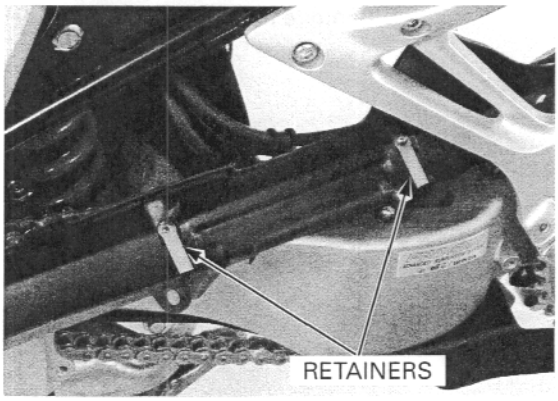

Remove the bolts, collars and air guide.

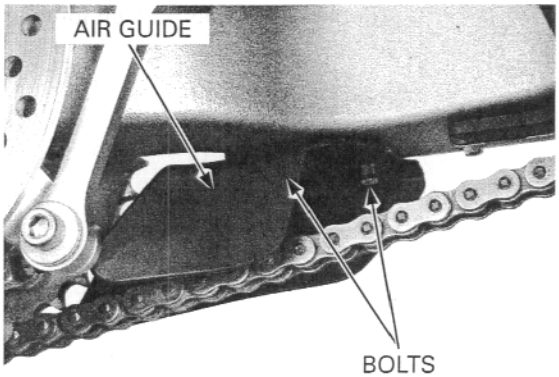

Remove the driven flange assembly from the axle.

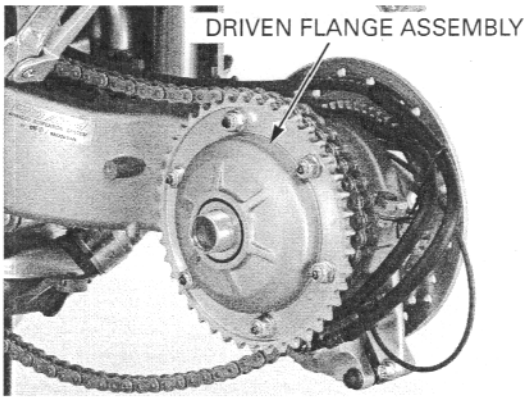

Remove the rear brake caliper mounting bolts.
Remove the caliper from the brake disc.

Do not operate the brake lever or pedal after the brake caliper is removed.

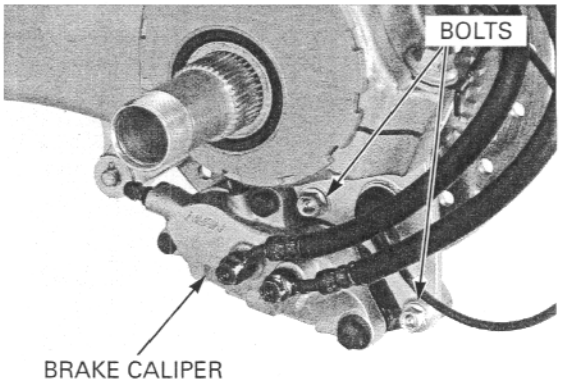

Remove the rear axle/brake disc assembly.

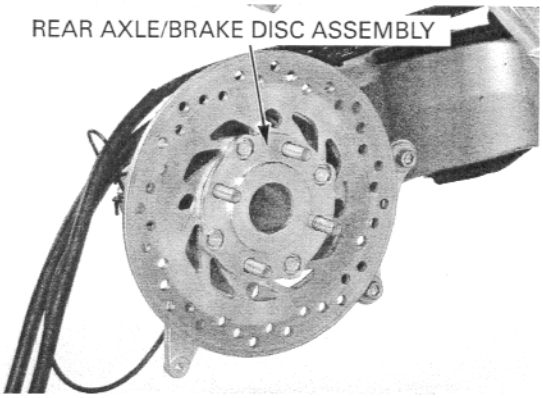

ABS type only: Remove the bolts and rear wheel speed sensor.

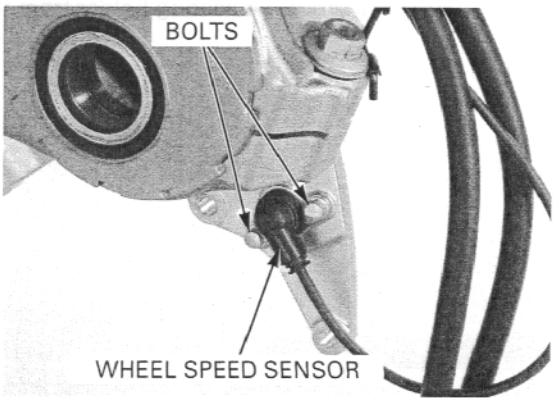

Remove and discard the cotter pin from the torque rod bolt.

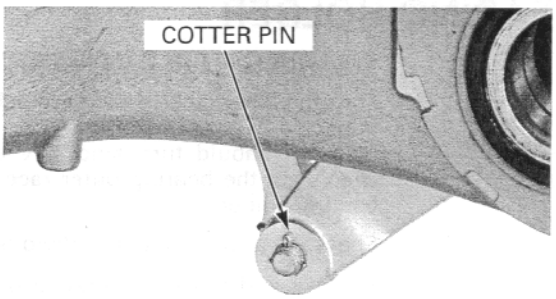

Remove the two socket bolts and torque rod.

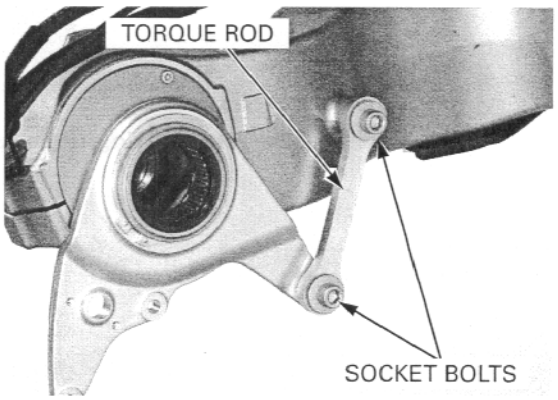

Remove the snap ring and brake caliper stay.

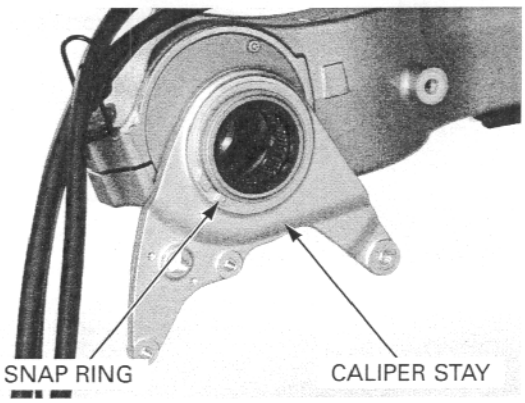

Remove the bearing holder from the swingarm.

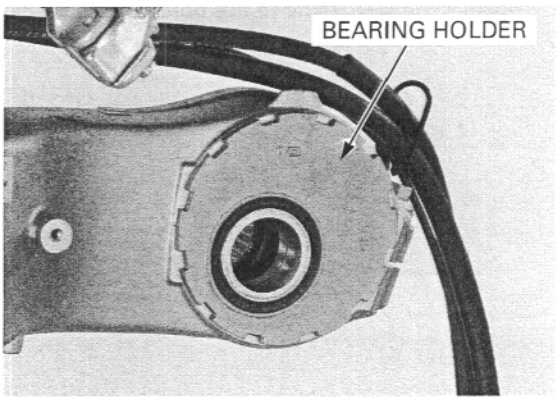

BEARING HOLDER

BEARING REPLACEMENT

Turn the inner race of each radial bearing with your finger.
Bearings should turn smoothly and quietly. Also check that the bearing outer race fits tightly in the bearing holder.

Check the needle roller for obvious signs of wear

Always replace the bearings in pairs.

Remove and discard the radial ball bearings if the races do not turn smoothly and quietly, or if they fit loosely in the bearing holder.
Replace the needle bearing if it is wear or damaged.

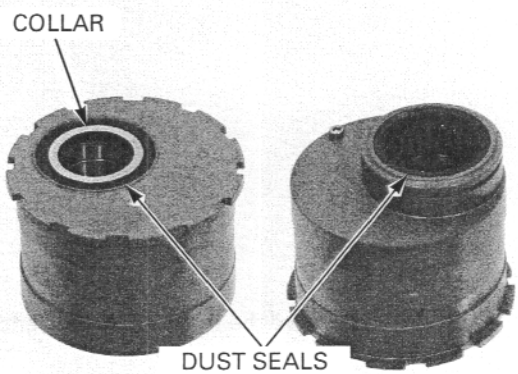

Remove the dust seal.

Remove the retaining rings from each side.

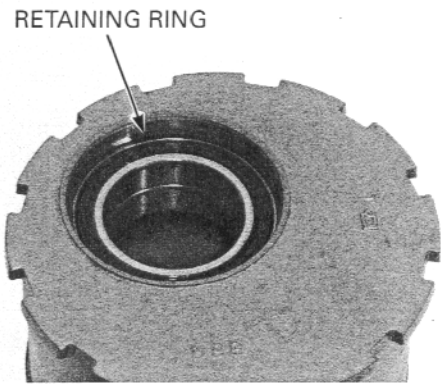

Press the ball bearing out of the bearing holder first using the special tools and a hydraulic press.

TOOLS:

Driver	**07749-0010000**
Attachment, 42 X 47 mm	**07746-0010300**
Pilot, 40 mm	**07746-0040900**

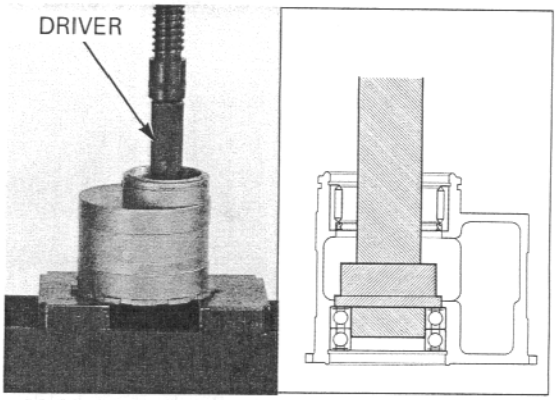

Press the needle bearing out from the bearing holder using the special tools and a hydraulic press.

TOOLS:

Driver	**07749-0010000**
Attachment, 52 X 55 mm	**07746-0010400**

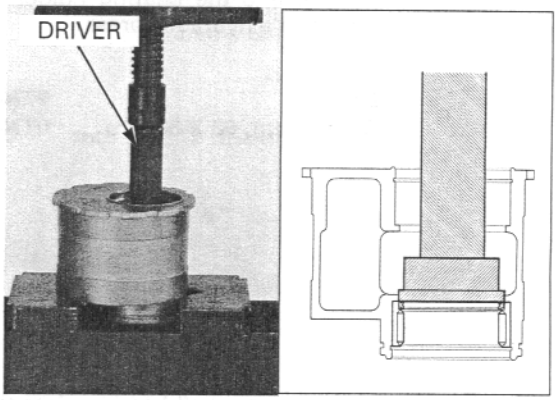

BEARING HOLDER ILLUSTRATION

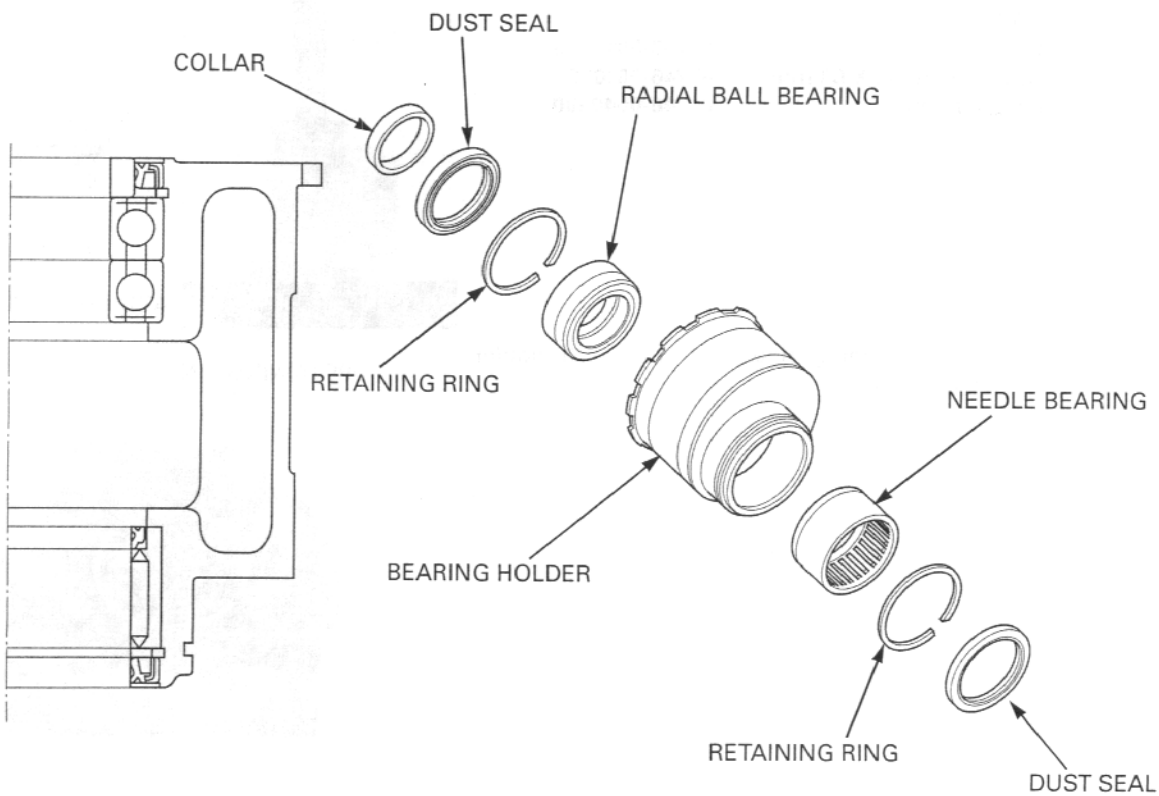

Fill the new needle bearing with multi-purpose grease.

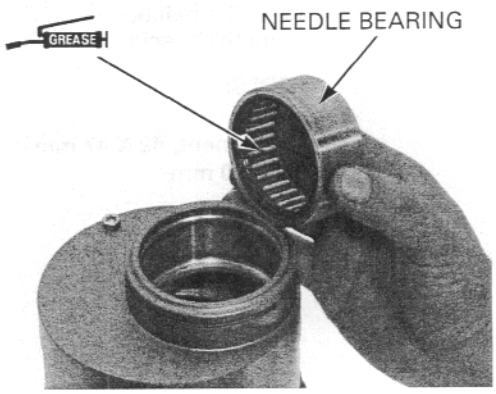

Install the bearing with the marking facing out.

Press it into the bearing holder using the special tools and a hydraulic press.

TOOLS:

Driver	**07749-0010000**
Attachment, 62 X 68 mm	**07746-0010500**

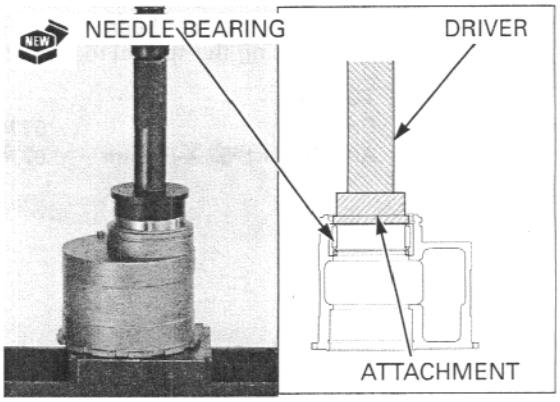

Install the bearing with the marking facing out.

Press the new ball bearings into the bearing holder using the special tools and a hydraulic press.

TOOLS:

Driver	**07749-0010000**
Attachment, 62 X 68 mm	**07746-0010500**
Pilot, 40 mm	**07746-0040900**

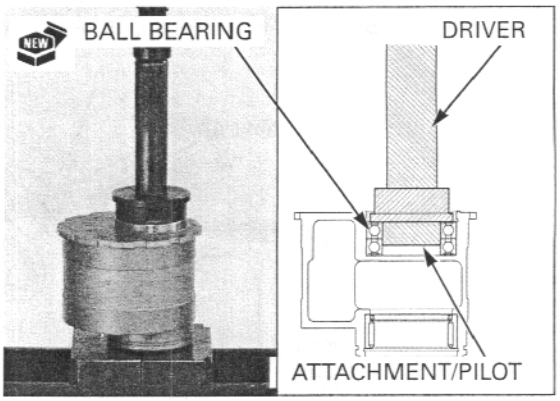

Install the retaining rings into the each holder groove securely.

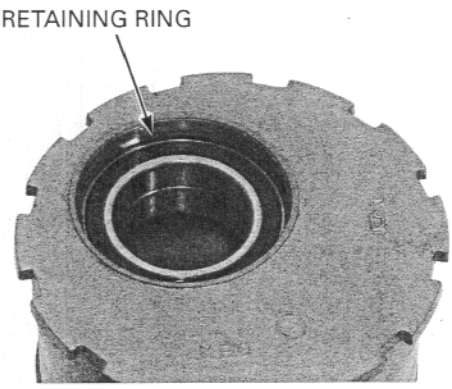

Apply grease to the new dust seal lips, then install them into the bearing holder.

Install the collar to the left side of the bearing holder.

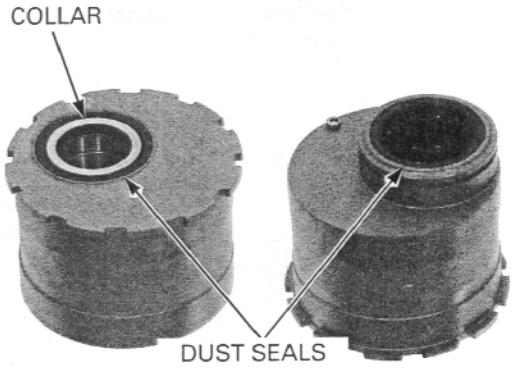

DRIVEN FLANGE

DISASSEMBLY

Remove the nuts/bolts and driven sprocket.

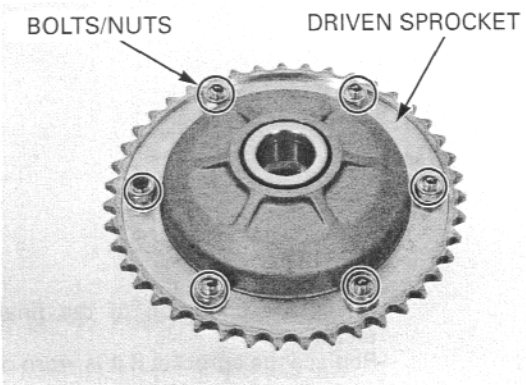

Remove the collar and dust seal from the driven sprocket hub.

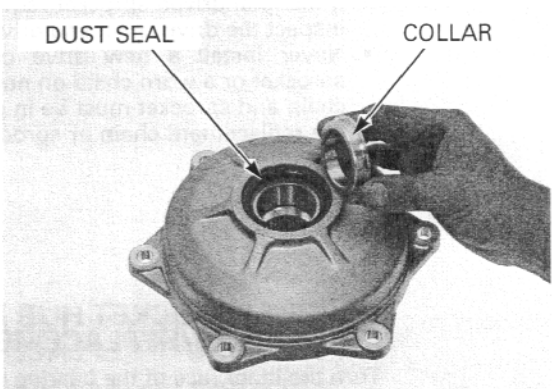

Separate the driven flange from the driven sprocket hub.

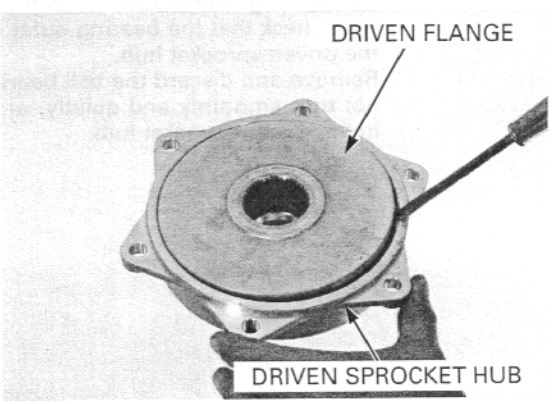

Remove the O-ring and distance collar.
Remove the damper rubbers from the driven sprocket hub.

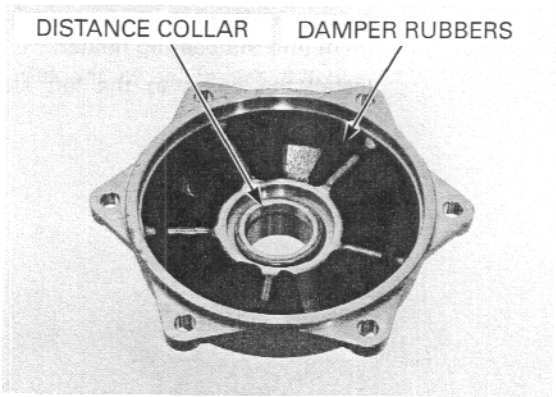

Check the damper rubbers for wear or damage, replace if necessary.

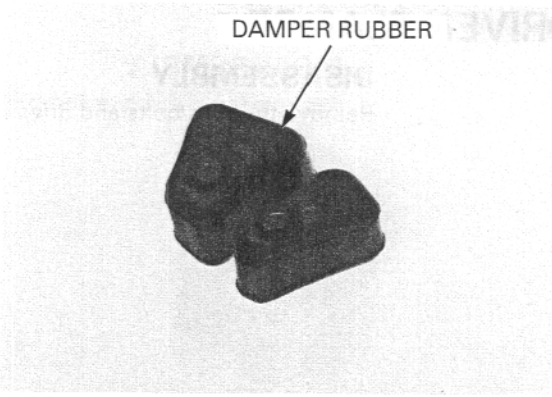

Check the condition of the final driven sprocket teeth.
Replace the sprocket if it is worn or damaged.

- If the final driven sprocket requires replacement, inspect the drive chain and drive sprocket.
- Never install a new drive chain on a worn sprocket or a worn chain on new sprockets. Both chain and sprocket must be in good condition or the replacement chain or sprocket will wear rapidly.

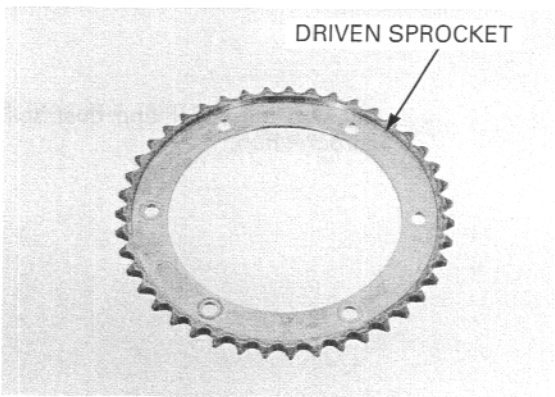

DRIVEN SPROCKET HUB BEARING INSPECTION/REPLACEMENT

Turn the inner race of the bearing with your finger. The bearing should turn smoothly and quietly.
Also check that the bearing outer race fits tightly in the driven sprocket hub.
Remove and discard the ball bearing if the races do not turn smoothly and quietly, or if they fit loosely in the driven sprocket hub.

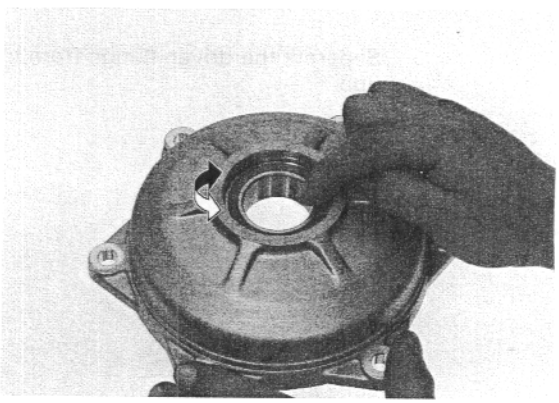

Press the bearing out from the driven sprocket hub using the special tools and a hydraulic press.

TOOLS:

Driver	**07749-0010000**
Attachment, 42 X 47 mm	**07746-0010300**
Pilot, 35 mm	**07746-0040800**

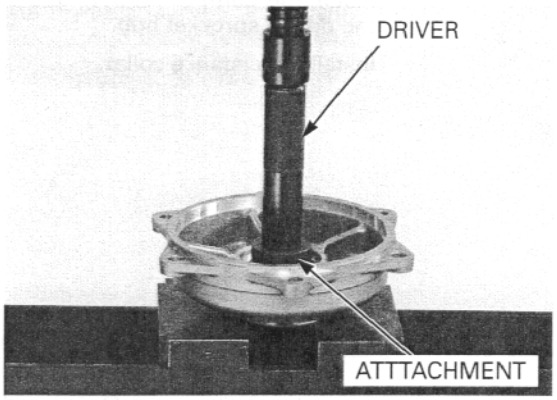

Press the new bearing into the driven sprocket hub using the special tools and a hydraulic press.

TOOLS:

Driver	**07749-0010000**
Attachment, 52 X 55 mm	**07746-0010400**
Pilot, 35 mm	**07746-0040800**

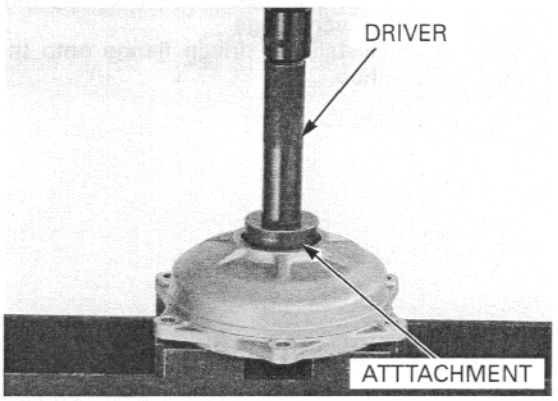

ASSEMBLY

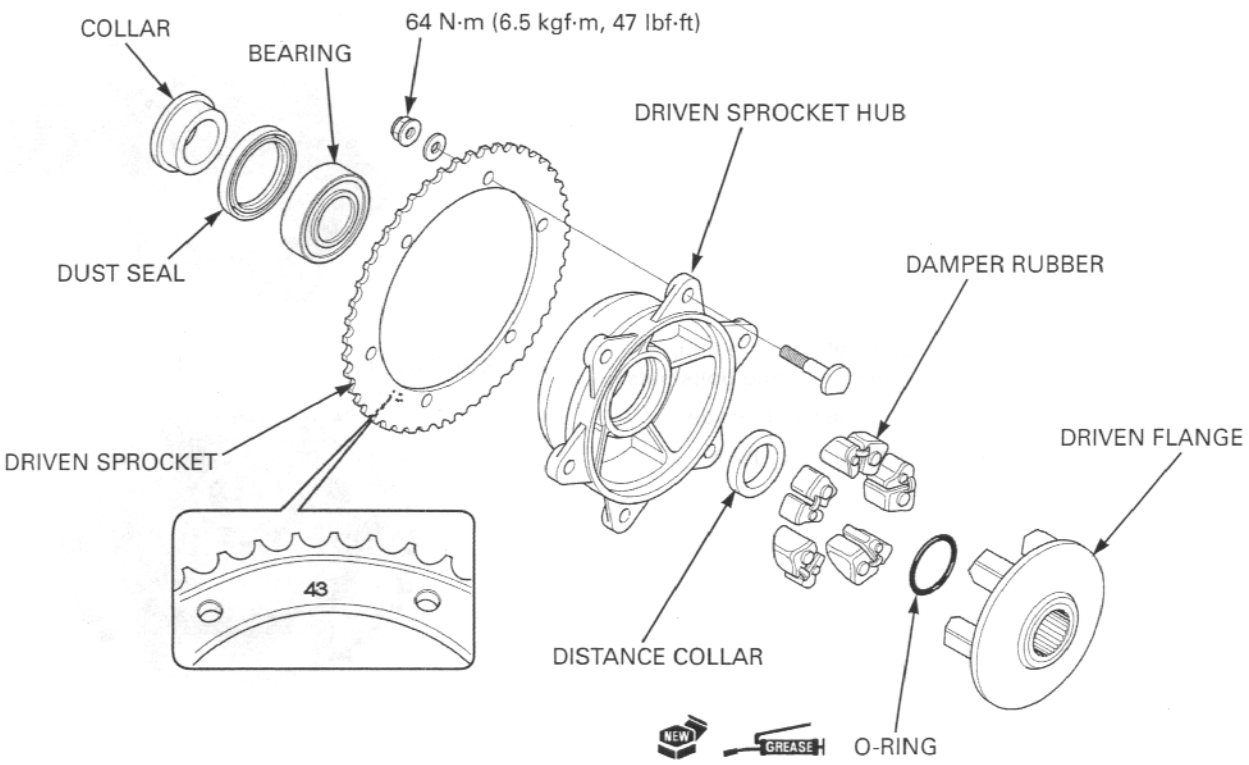

Install the damper rubbers and distance collar into the driven sprocket hub.

Install the distance collar.

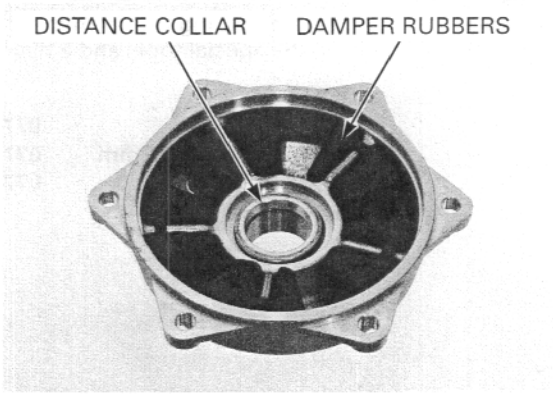

Apply grease to a new O-ring and install it onto the driven flange.
Install the driven flange onto the driven sprocket hub.

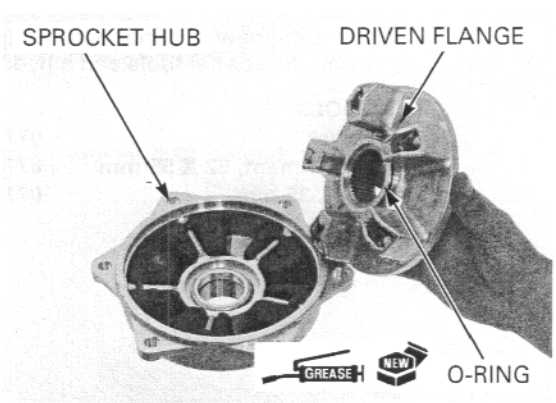

Apply grease to the dust seal lips, install it into the driven sprocket hub.
Install the collar.

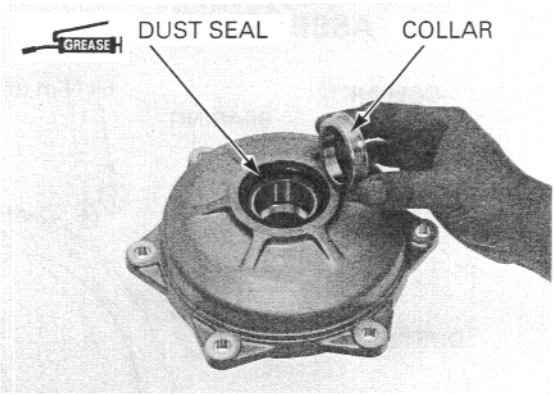

Install the driven sprocket onto the hub.
Install the washers and mounting bolts/nuts.

Install the washers with their chamfered side facing the driven sprocket.

Tighten the nut to the specified torque.

TORQUE: 64 N·m (6.5 kgf·m, 47 lbf·ft)

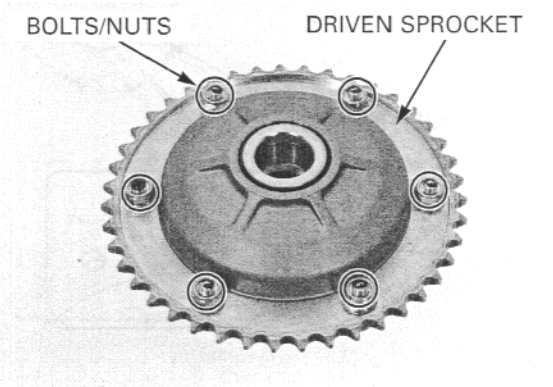

REAR AXLE/BRAKE DISC

BRAKE DISC REPLACEMENT

ABS type only: Remove the bolts and rear wheel pulser ring from the rear brake disc.

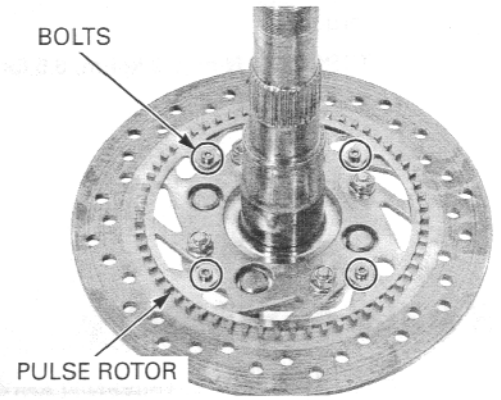

Remove the bolts/nuts and brake disc from the axle flange.

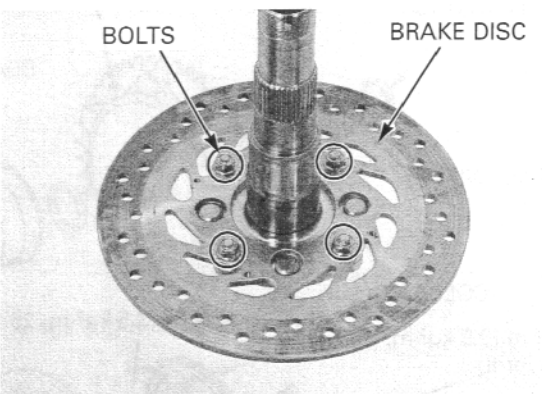

AXLE INSPECTION

Check the axle for runout or other damage.

SERVICE LIMIT: 0.2 mm (0.01 in)

Replace the axle if necessary.

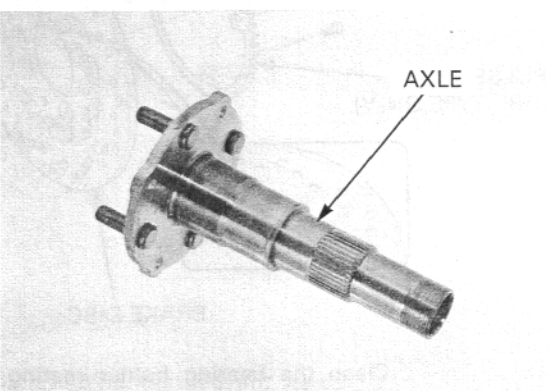

Install the brake disc with its rotation mark facing out.
Install the brake disc mounting bolts and nuts, tighten the nuts to the specified torque.

TORQUE: 34 N·m (3.5 kgf·m, 25 lbf·ft)

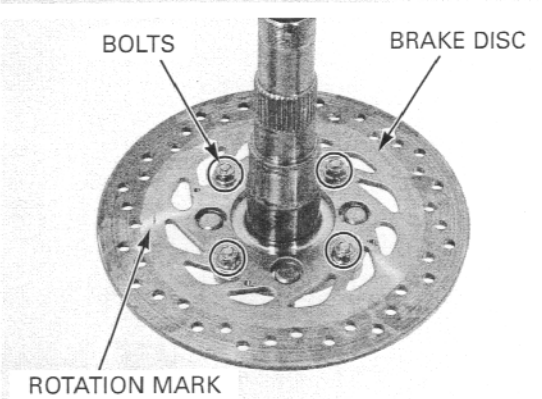

Apply a locking agent to the pulser ring bolt threads.

Install the rear wheel pulser ring onto the brake disc, install and tighten the bolts to the specified torque.

TORQUE: 9 N·m (0.9 kgf·m, 6.5 lbf·ft)

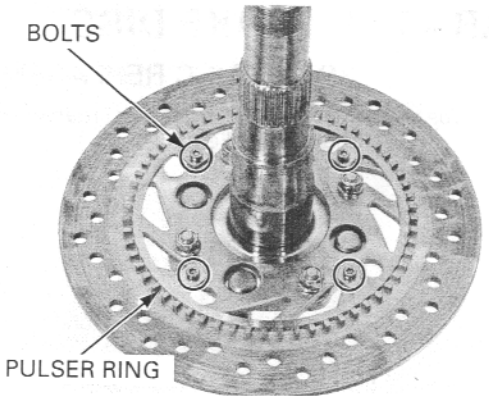

REAR AXLE ASSEMBLY

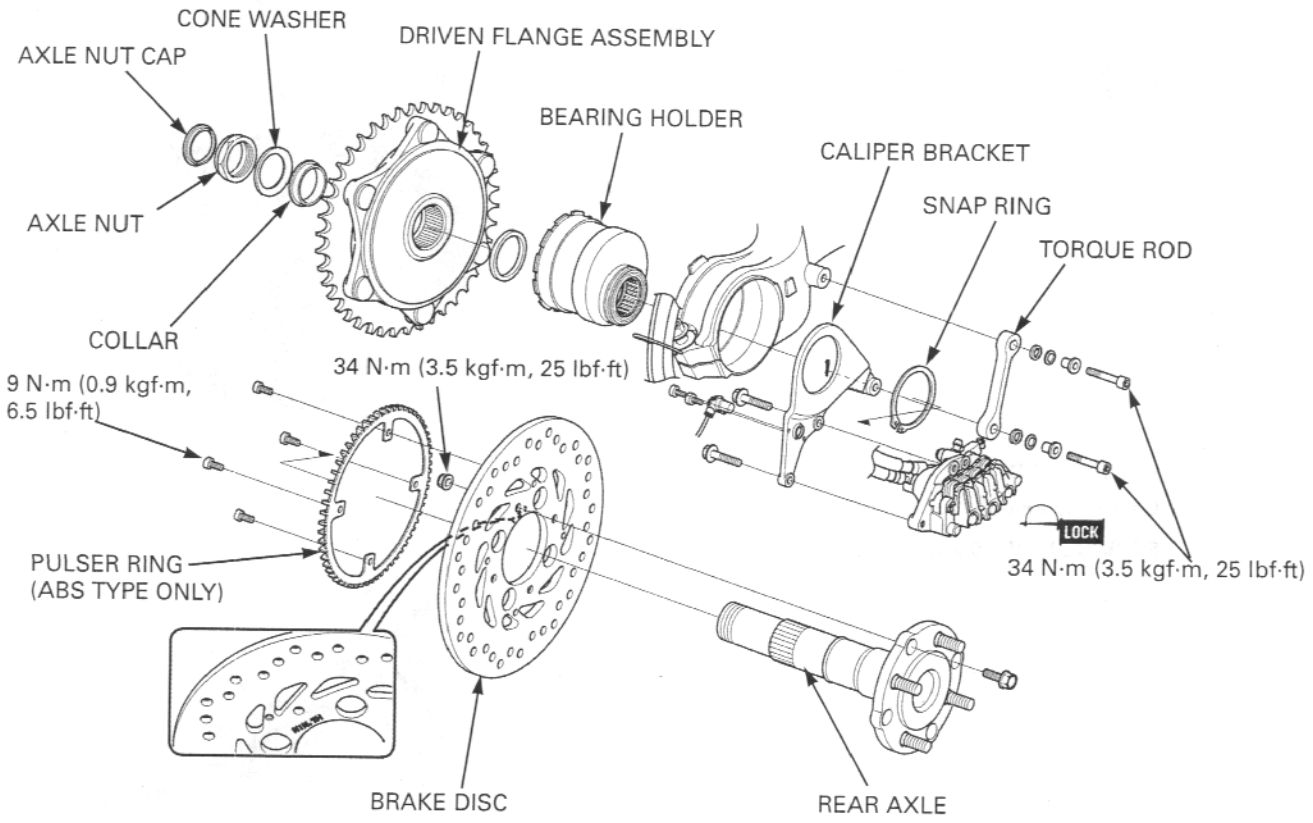

Clean the bearing holder mating surfaces of the swingarm.

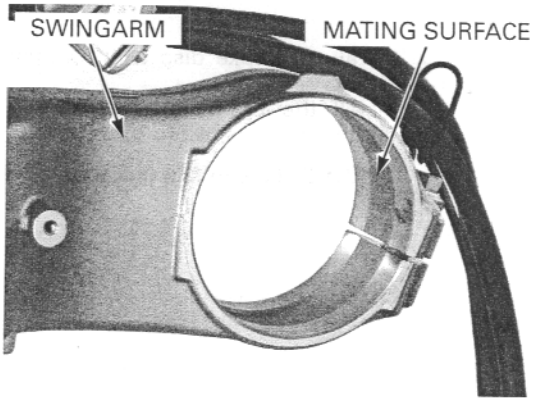

Install the bearing holder into the swingarm.

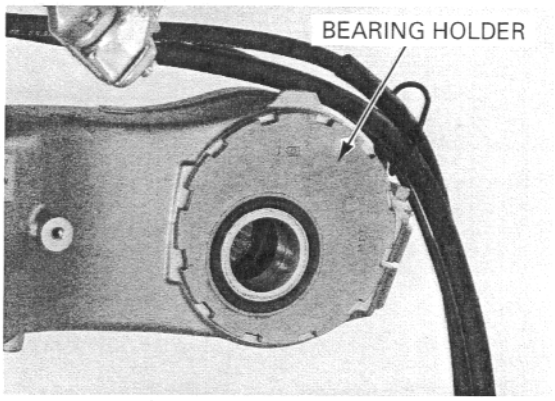

Install the rear brake caliper stay onto the bearing holder, secure it with a snap ring.

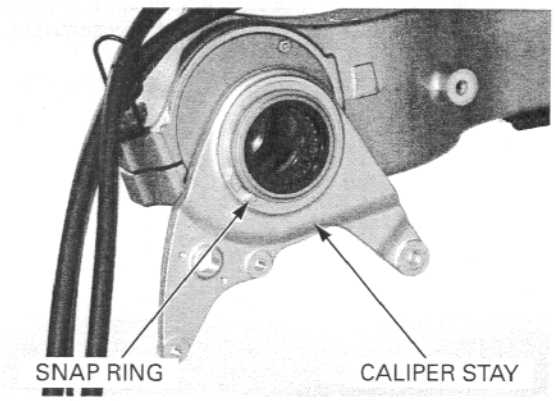

Install the shim, collar and rubber onto the brake torque rod.

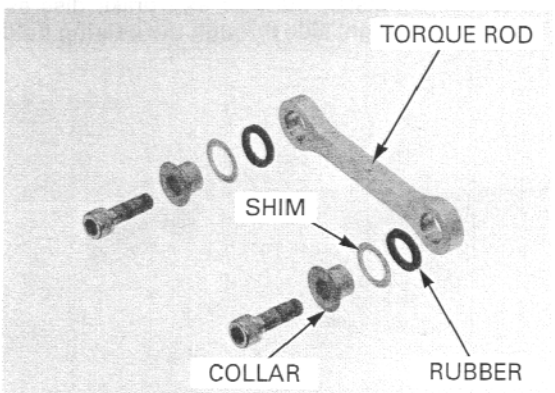

Install and tighten the new bolts to the specified torque.

TORQUE: 34 N·m (3.5 kgf·m, 25 lbf·ft)

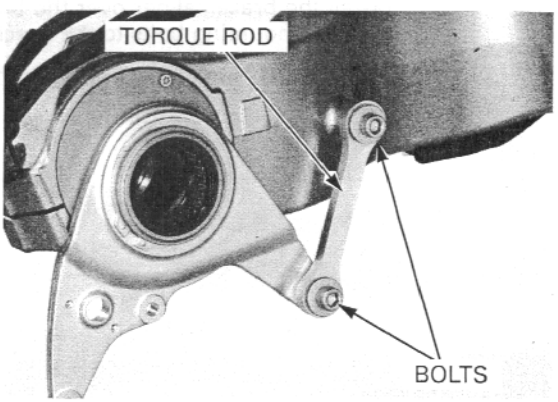

Secure the caliper brackets side bolt with a new cotter pin.

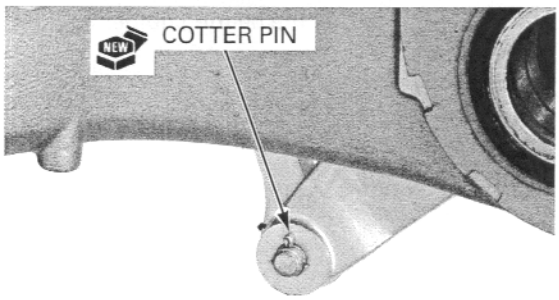

ABS type only: Install the rear wheel speed sensor onto the caliper bracket, tighten the bolts securely.

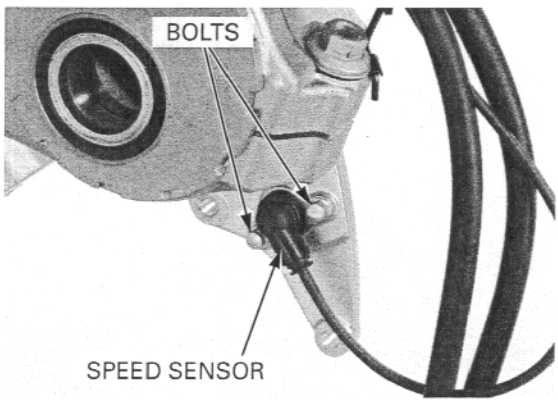

Install the rear axle/brake disc assembly from the right side through the bearing holder.

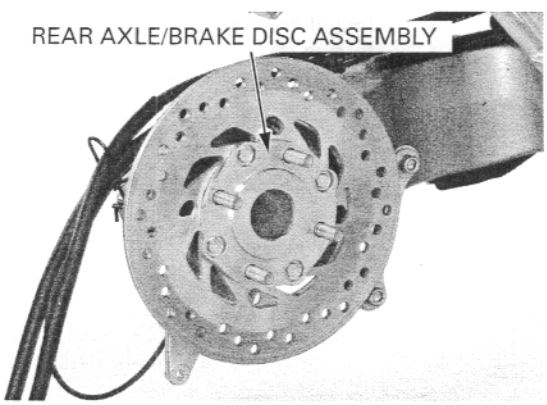

Install the brake caliper over the brake disc, tighten the new mounting bolts to the specified torque.

TORQUE: 31 N·m (3.2 kgf·m, 23 lbf·ft)

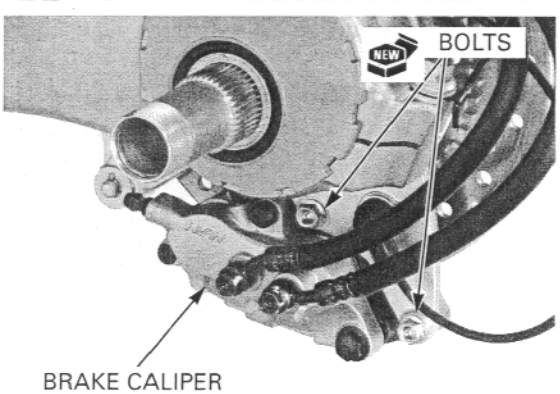

While aligning the splines, install the driven flange assembly onto the rear axle.
Install the drive chain over the driven sprocket.

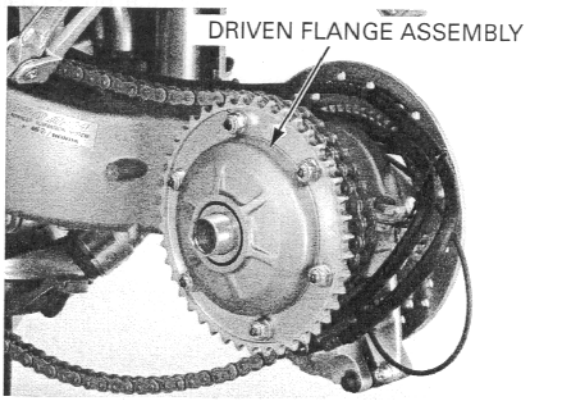

Install the air guide and collars, then tighten the new bolts to the specified torque.

TORQUE: 9 N·m (0.9 kgf·m, 6.5 lbf·ft)

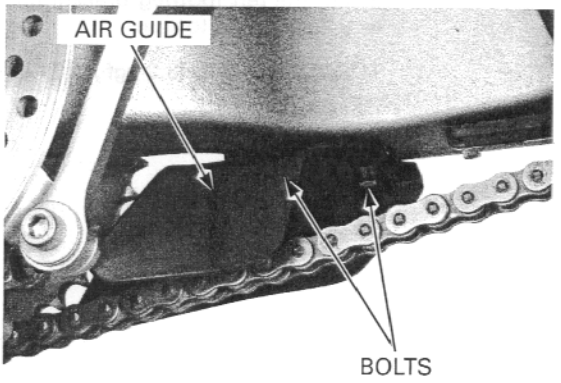

Install the brake hose clamp retainer into the drive chain case.

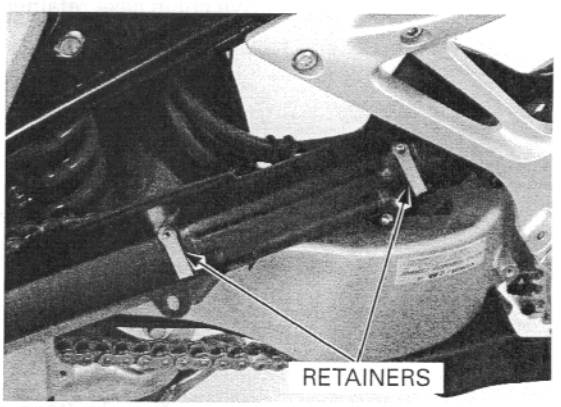

Route the brake hoses and rear wheel speed sensor wire onto the drive chain case.

Install the brake hoses/rear wheel speed sensor wire clamps and tighten the new screws securely.

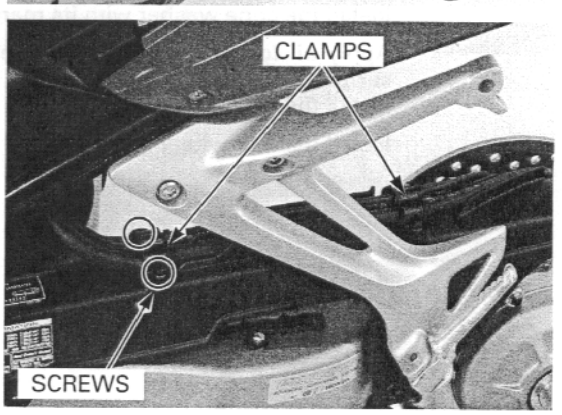

Install and tighten the drive chain case mounting bolts.

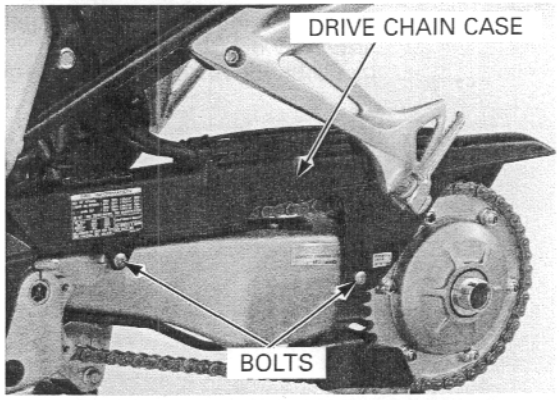

Install the left footpeg bracket and tighten the bolts to the specified torque.

TORQUE: 32 N·m (3.3 kgf·m, 24 lbf·ft)

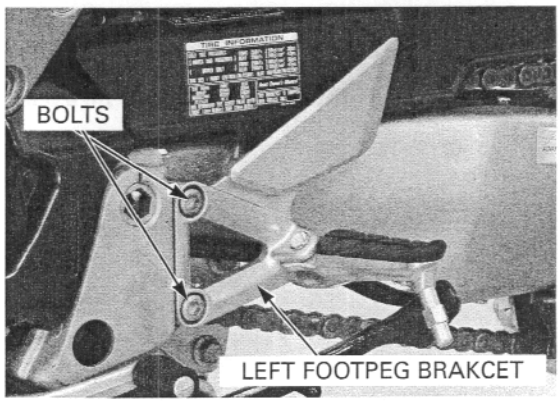

Install the drive chain case retainer trim clips.

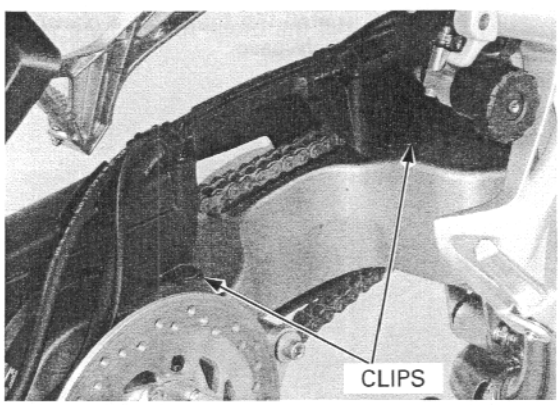

Install the cone washer with its marks facing out.

Apply oil to the new axle nut threads and seating surface.

Install the axle nut.

Install the rear wheel (page 14-6).

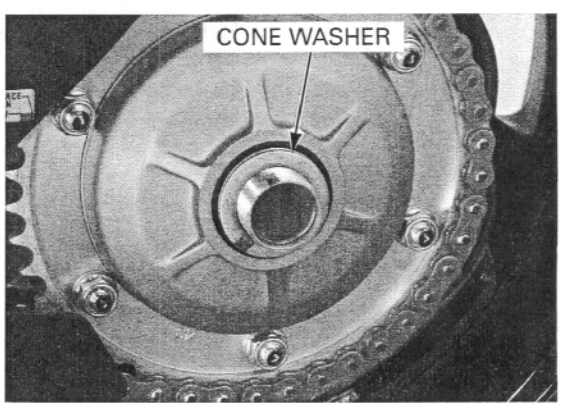

Operate the brake pedal to seat the caliper piston against the pads.

Tighten the rear axle nut while applying the rear brake.

TOOL:
Socket wrench, 46 mm 07HMJ-MN50100

TORQUE: 201 N·m (20.5 kgf·m, 148 lbf·ft)

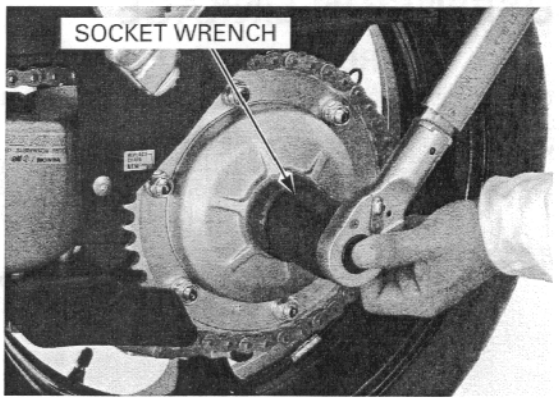

Be careful not to damage the rear axle threads.

Stake the rear axle nut against the rear axle groove.

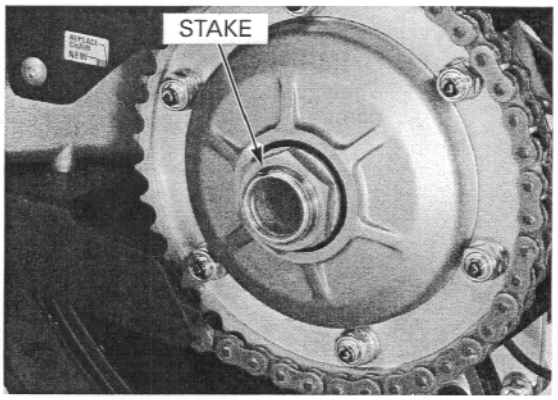

Install the rear axle nut cap.

Adjust the drive chain slack by turning the bearing holder (page 3-19).

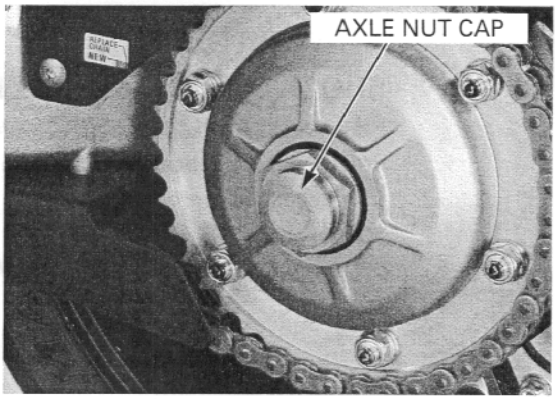

SUSPENSION LINKAGE

REMOVAL

Do not service the suspension linkage while the exhaust system is hot.

Support the motorcycle on its center stand.

Remove the following:
- Shock absorber lower mounting bolt/nut
- Shock arm bolt/nut (link plate side)
- Shock arm bolt/nut (frame side)
- Shock arm
- Shock link pate-to-swingarm bolt/nut (frame)
- Shock link plates

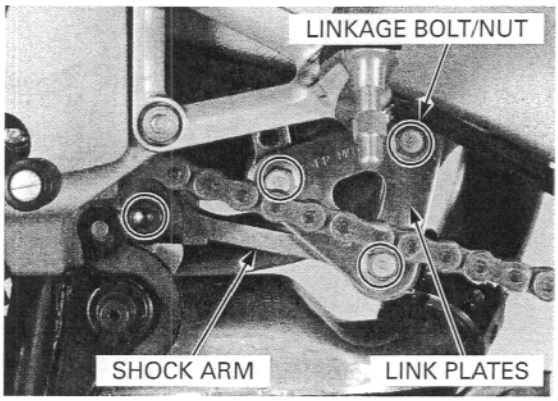

INSPECTION

Check that the suspension linkage components for damage, replace any damaged components.

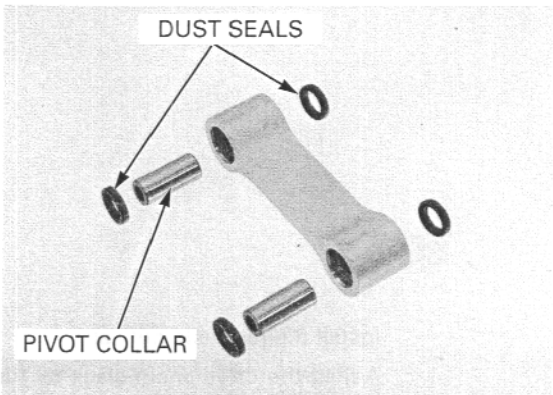

SHOCK LINK BEARING REPLACEMENT

Remove the pivot collars and dust seals.

Press the needle bearing out of the shock link using the special tools.

TOOL:

Pin driver	**07GMD-KT80100**

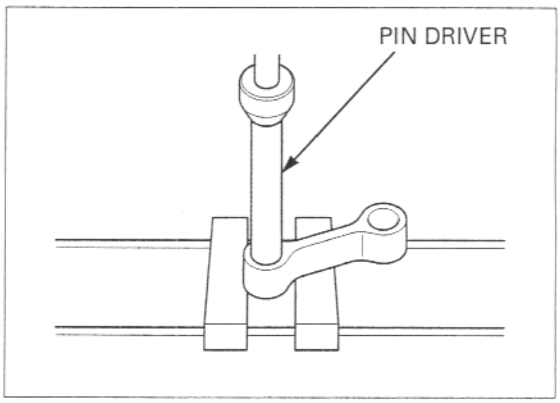

Press the needle bearing into the shock link with the marked side facing out.

Press a new needle bearing into the shock link so that the needle bearing surface is 5.2 – 5.7 mm (0.20 – 0.22 in) from the end of the shock link using the special tools.

TOOLS:

Driver	**07749-0010000**
Attachment, 24 X 26 mm	**07746-0010700**
Pilot, 17 mm	**07746-0040400**

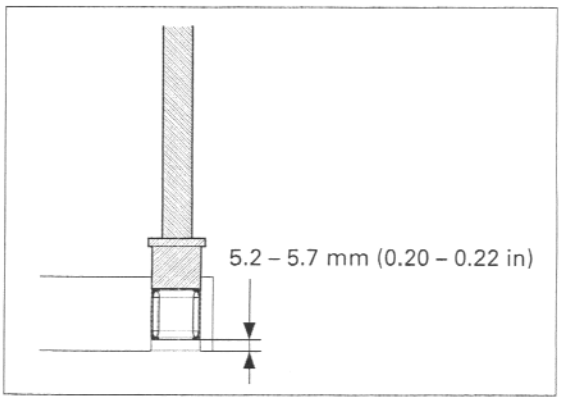

Apply grease to the new dust seal lips, install them into the shock link.
Install the pivot collars.

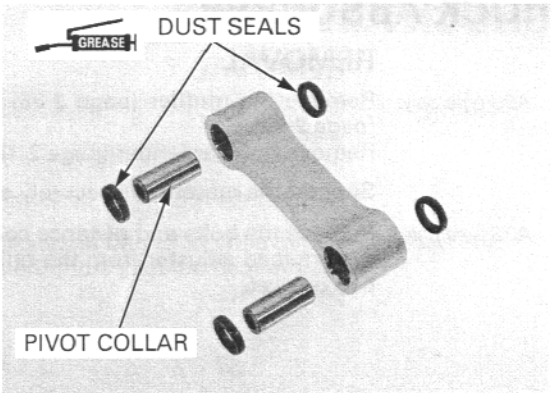

INSTALLATION

Remove the following:

- Shock arm
- Shock arm bolt/nut (frame side)
- Shock link plates with their "FR" mark facing to the forward
- Shock link plate-to-swingarm bolt/nut
- Shock arm bolt/nut (link plate side)
- Shock absorber lower mounting bolt/nut

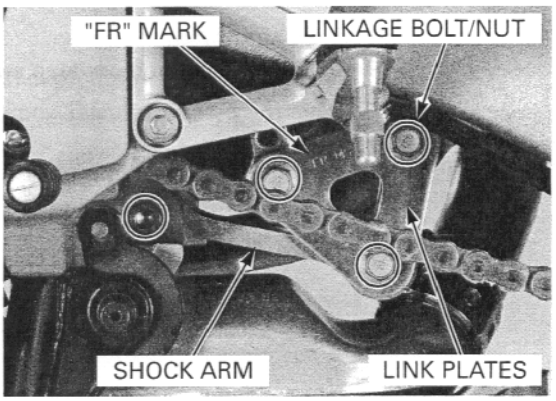

Tighten the shock link arm (frame side) to the specified torque.

TORQUE: 42 N·m (4.3 kgf·m, 31 lbf·ft)

Tighten the shock link nut to the specified torque.

TORQUE: 42 N·m (4.3 kgf·m, 31 lbf·ft)

Tighten the shock arm bolt/nut (frame side) to the specified torque.

TORQUE: 42 N·m (4.3 kgf·m, 31 lbf·ft)

Tighten the shock absorber lower mounting nut to the specified torque.

TORQUE: 42 N·m (4.3 kgf·m, 31 lbf·ft)

SHOCK ABSORBER

REMOVAL

ABS type only: Remove the muffler (page 2-28) and exhaust pipe (page 2-29).
Remove the rear fender (page 2-17).

Support the motorcycle securely on its center stand.

ABS type only: Remove the bolts and distance collars, then remove the pre-load adjuster from the right passenger footpeg bracket.

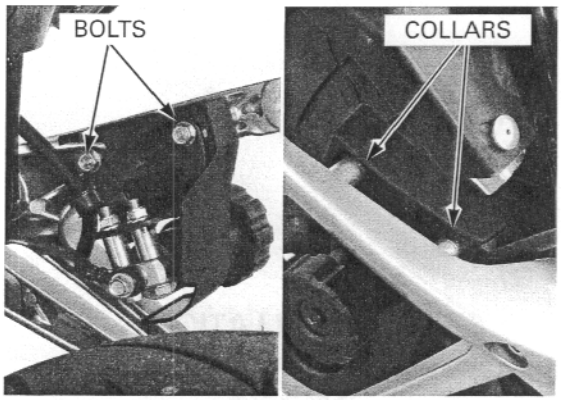

Remove the screw and pre-load adjuster cover.

Be careful not to lose the locking ball and spring.

Remove the screw, adjuster knob, locking ball and spring.

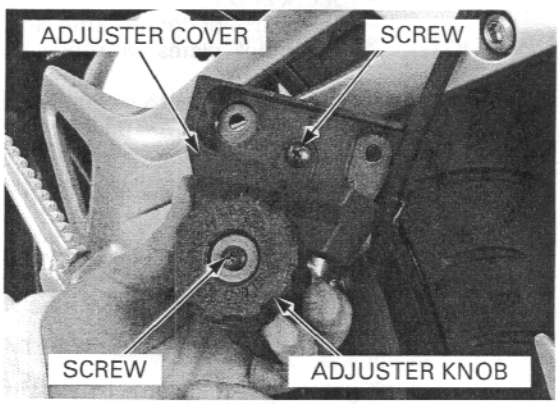

Remove the shock absorber lower mounting bolt/nut.

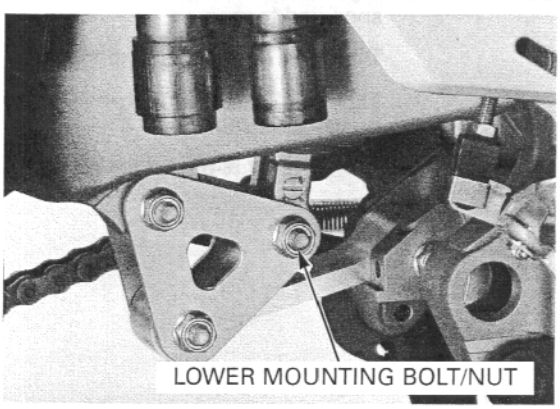

Remove the fuel tank mounting bolts and lift the rear end of the fuel tank.

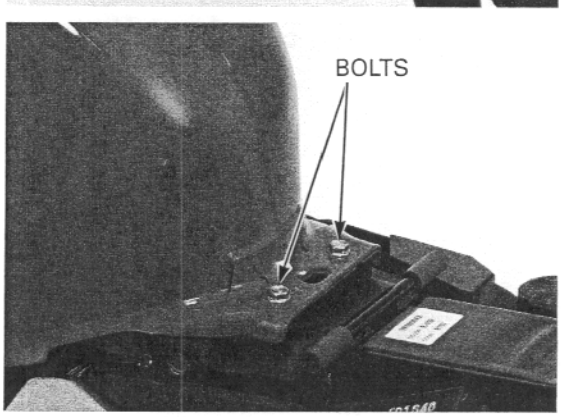

Remove the shock absorber upper mounting nut and the shock absorber/upper bracket assembly.

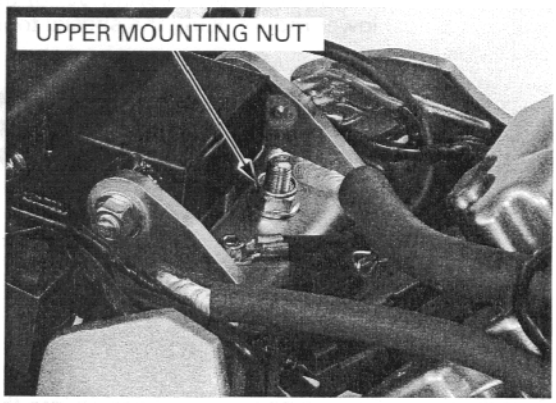

Remove the shock absorber upper mounting bolt/nut, then remove the shock absorber upper bracket.

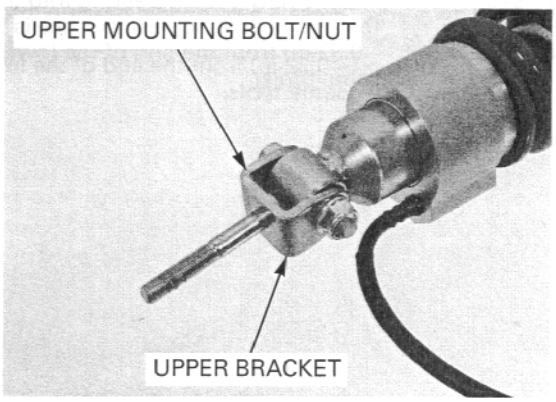

INSPECTION

Check the damper unit, reservoir hose and reservoir for leakage or other damage.
Check the upper joint bushing for wear or damage.
Replace the shock absorber assembly if necessary.

Remove the lower joint pivot collar.
Check the needle bearing, pivot collar and dust seals for wear or damage.

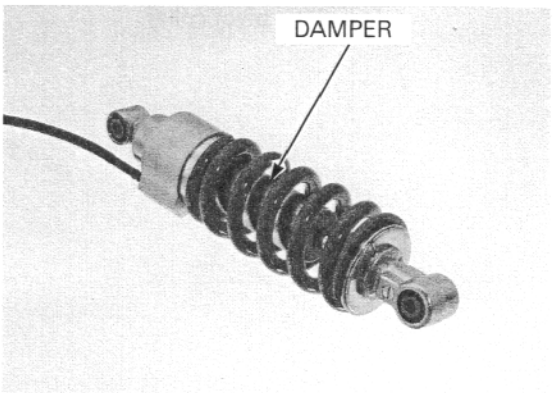

NEEDLE BEARING REPLACEMENT

Remove the pivot collar and dust seals.

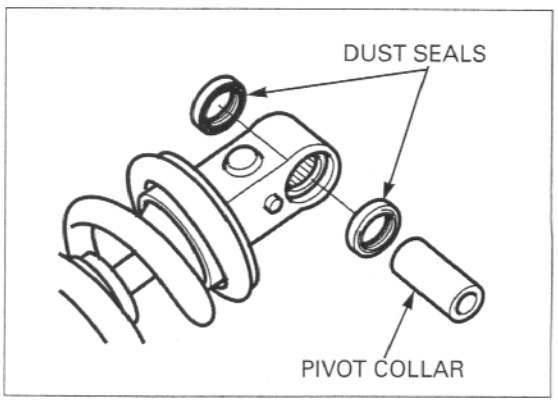

Press the needle bearing out of the shock absorber lower mount using the special tools.

TOOLS:

Driver shaft	**07946-MJ00100**
Attachment, 24 X 26 mm	**07746-0010700**
Pilot, 17 mm	**07746-0040400**

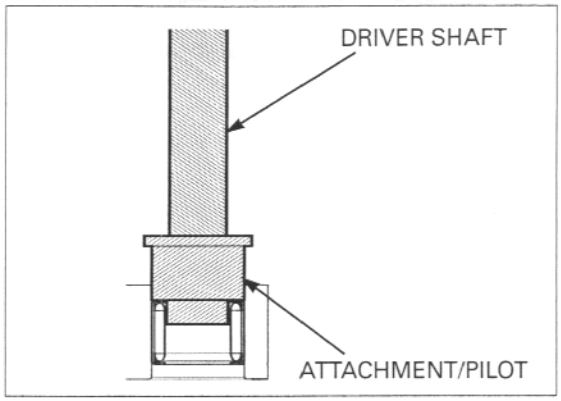

Press the needle bearing into the lower mount with the marked side facing out.

Press a new needle bearing into the lower mount so that the needle bearing surface is 7.8 – 8.2 mm (0.31 – 0.32 in) from the end of the lower mount using the same tools.

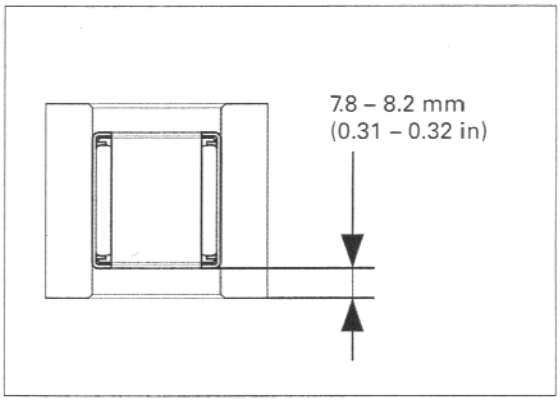

Apply grease to the new dust seal lips, install them into the lower mount.
Install the pivot collar.

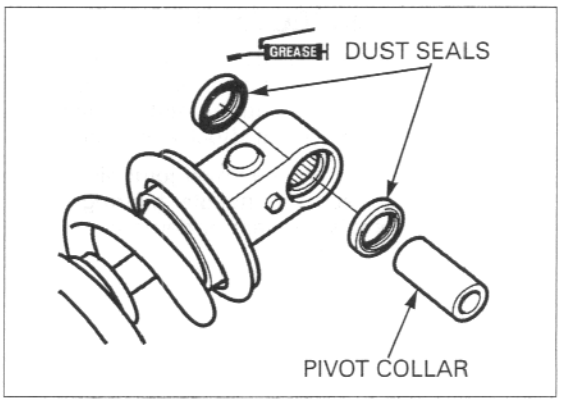

SHOCK ABSORBER DISPOSAL PROCEDURE

Center punch the damper to mark the drilling point.

Wrap the damper unit inside a plastic bag.
Support the damper in a vise as shown.
Through the open end of the bag, insert a drill motor with a sharp 2 - 3 mm (5/64 - 1/8 in) drill bit.

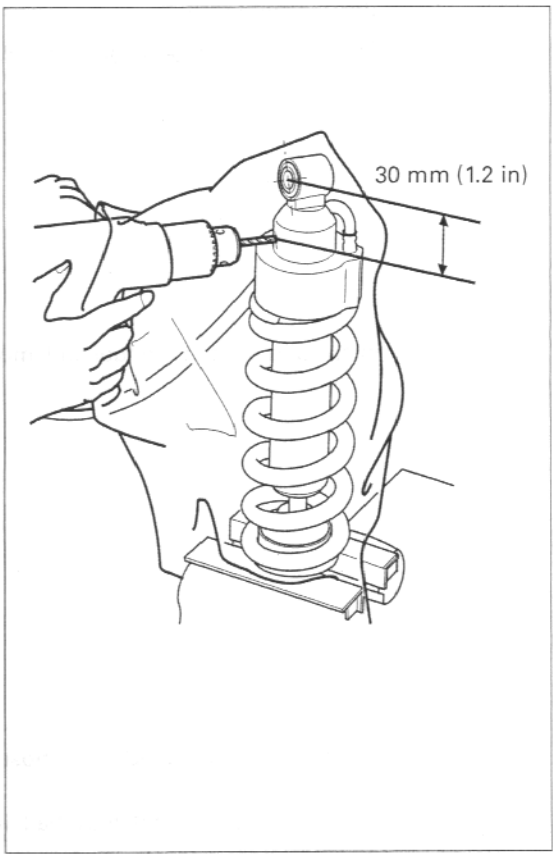

NOTICE

- *Point the valve away from you to prevent debris getting in your eyes.*
- *Before disposal of the shock absorber, release the nitrogen by pressing the valve core. Then remove the valve from the shock absorber reservoir.*

Hold the bag around the drill motor and briefly run the drill motor inside the bag; this will inflate the bag with air from the motor and help keep the bag from getting caught in the bit when you start.

INSTALLATION

Install the upper bracket to the shock absorber, install the mounting bolt/nut.
Hold the bolt and tighten the nut to the specified torque

TORQUE: 42 N·m (4.3 kgf·m, 31 lbf·ft)

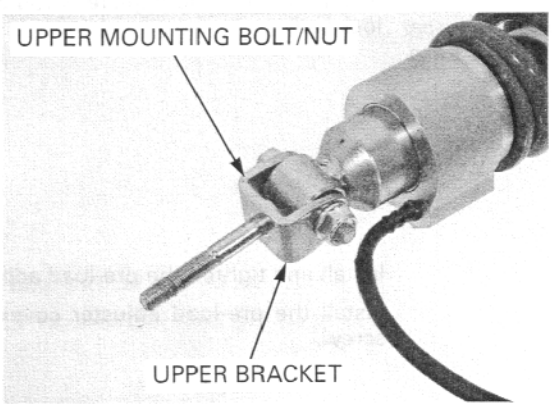

Install the shock absorber/upper bracket assembly into the frame with the rebound damping adjuster facing to the left.

Install and tighten the upper bracket nut to the specified torque.

TORQUE: 42 N·m (4.3 kgf·m, 31 lbf·ft)

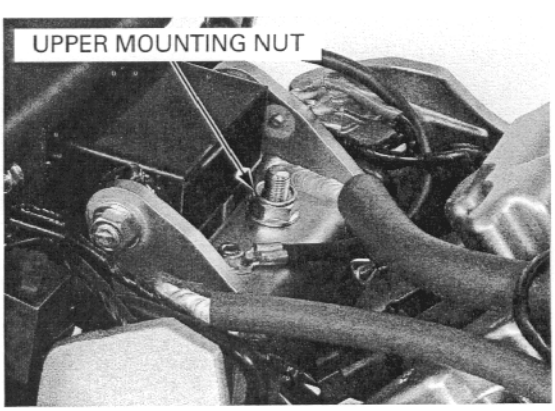

Install the suspension linkage (page 14-24).

Install and tighten the lower mounting bolts/nuts to the specified torque.

TORQUE: 42 N·m (4.3 kgf·m, 31 lbf·ft)

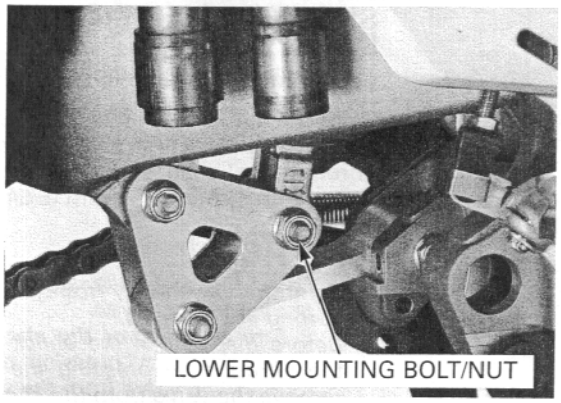

Install and tighten the fuel tank mounting bolts.

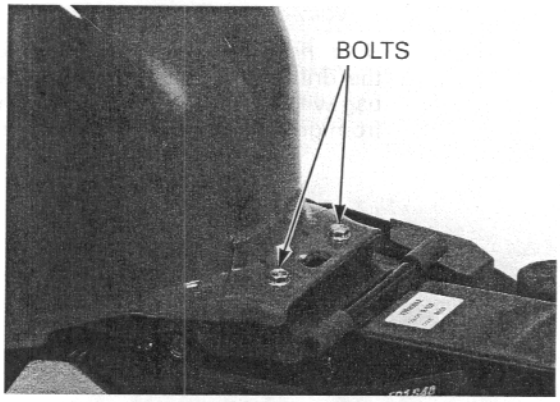

ABS type only: Route the pre-load adjuster hose into the frame (page 1-25).

Install the spring and lock ball into the pre-load adjuster body.

Be careful not to lose the locking ball and spring. Install the pre-load adjuster knob while pushing the lock ball.

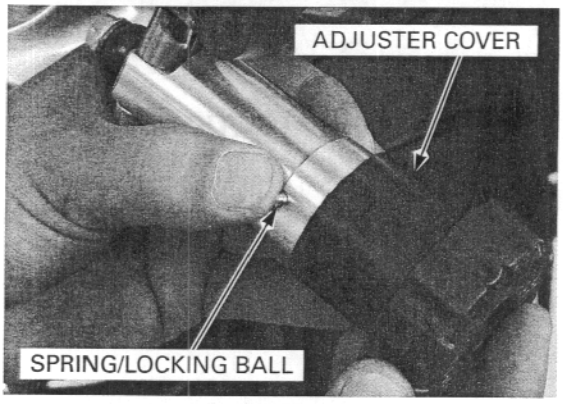

Install and tighten the pre-load adjuster knob screw.

Install the pre-load adjuster cover and tighten the screw.

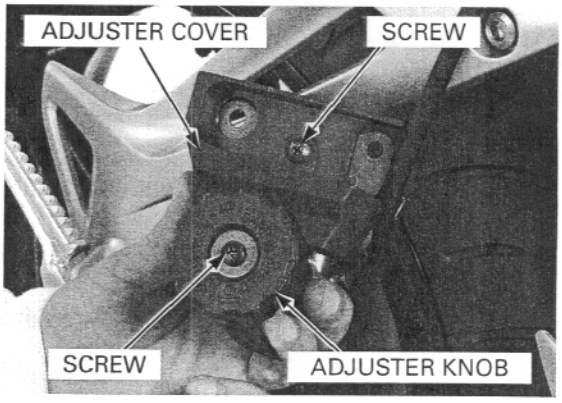

Install the pre-load adjuster onto the right passenger footpeg bracket.

Install the distance collars and mounting bolts, then tighten the bolts securely.

ABS type only: Install the rear fender (page 2-20).
Install the exhaust pipe (page 2-30) and muffler (page 2-33).

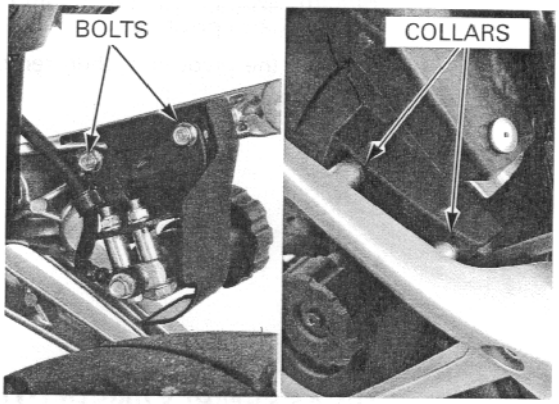

SWINGARM

REMOVAL

Remove the following:

- Rear axle (page 14-6)
- Rear axle bearing holder (page 14-10)

Remove the axle bearing holder pinch bolt and brake hose guide.

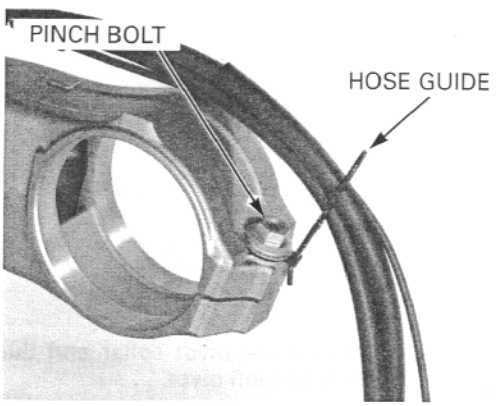

Remove the shock link plate-to-swingarm bolt/nut.

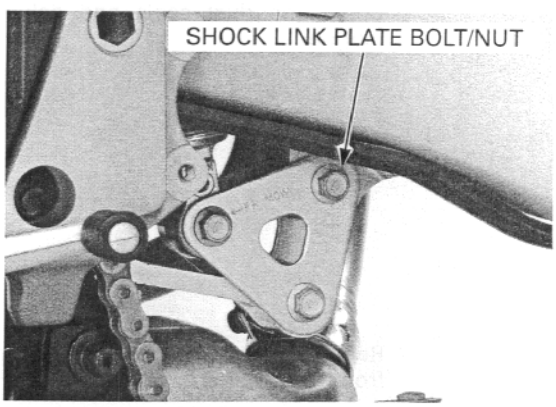

Loosen the swingarm pivot pinch bolts.

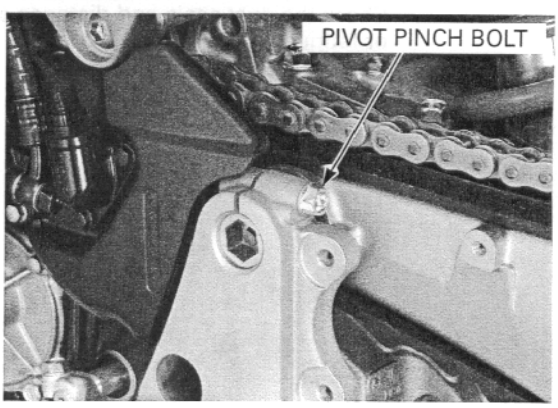

Hold the swingarm pivot bolt and loose and remove the swingarm pivot nut.

Remove the pivot bolt, then remove the swingarm assembly.

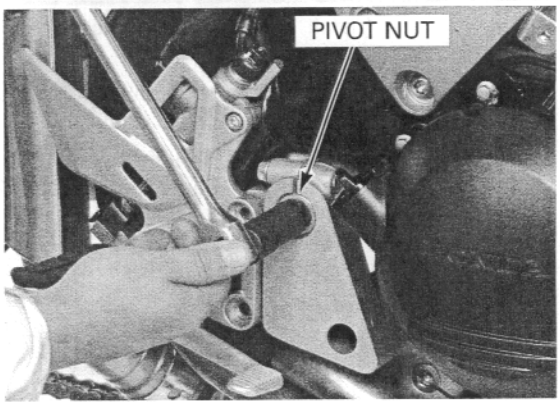

DISASSEMBLY/INSPECTION

Remove the bolts and drive chain slider.

Check the drive chain slider for wear or damage.

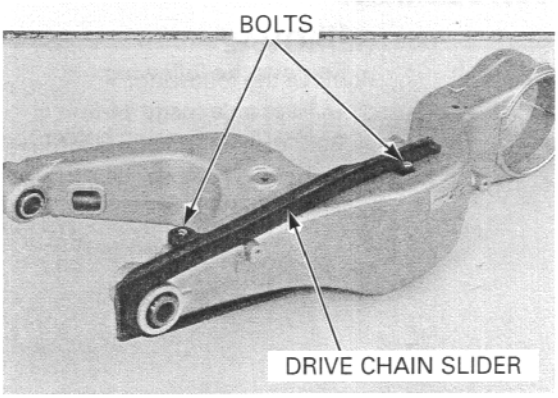

Remove the pivot collar and dust seals from the swingarm left pivot.

Check the dust seals and collar for damage or fatigue.

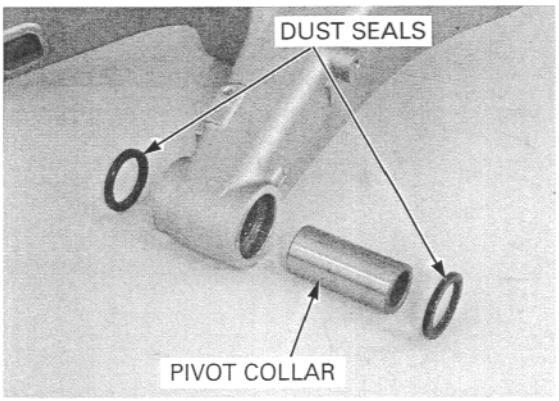

Remove the pivot distance collar and dust seals from the swingarm right pivot.

Check the dust seals and distance collar for damage or fatigue.

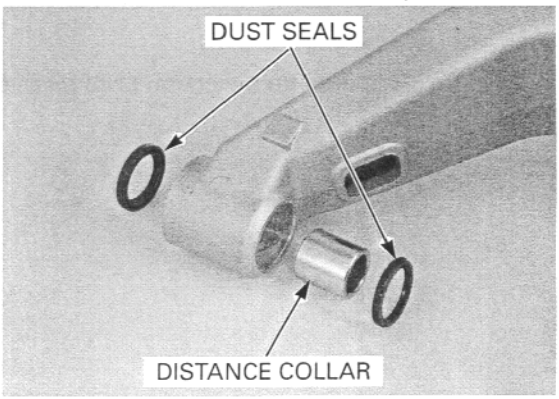

Turn the inner race of right pivot bearings with your finger.
The bearings should turn smoothly and quietly. Also check that the bearing outer race fits tightly in the hub.

Remove and discard the bearings if the races do not turn smoothly and quietly, or if they fit loosely in the pivot.

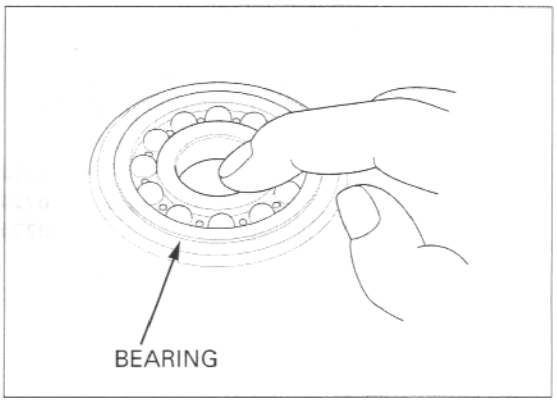

PIVOT BEARING REPLACEMENT

Remove the snap ring.

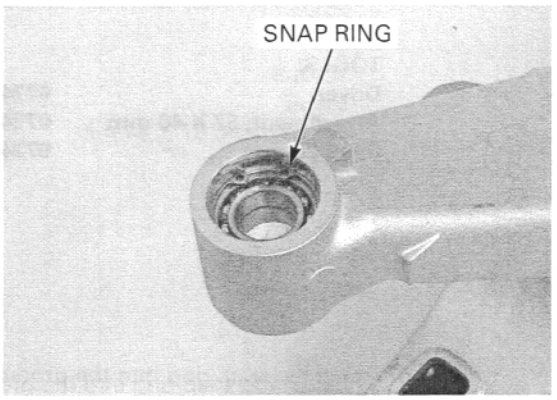

Remove the right pivot radial ball bearings using the special tools.

TOOLS:

Bearing remover handle	**07936-3710100**
Bearing remover head	**07936-3710600**
Remover weight	**07741-0010201**

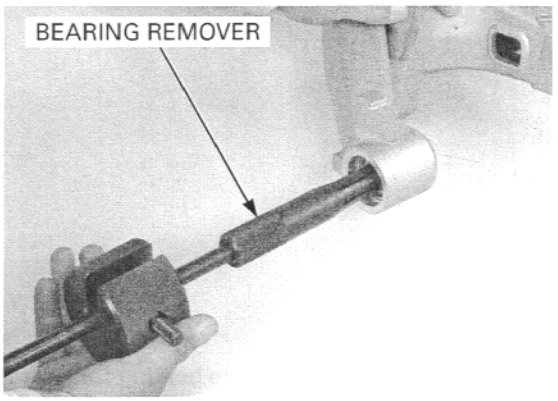

Press the left pivot needle bearing out using the special tools and a hydraulic press.

TOOLS:

Needle bearing remover	**07HMC-MR70100**
Driver shaft	**07946-MJ00100**

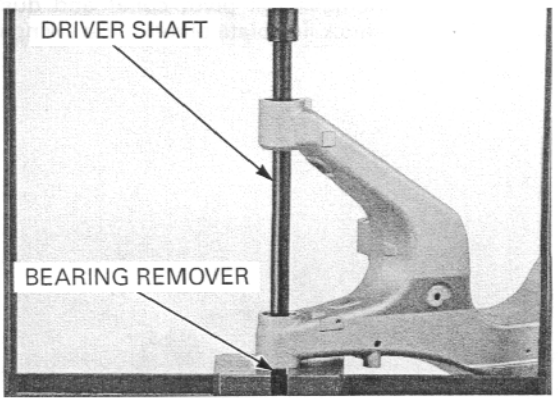

Pack new needle bearing with grease.
Press the needle bearing into the swingarm left pivot until the depth from the swingarm outer surface is 9.0 – 10.0 mm (0.35 – 0.39 in) using the special tools and a hydraulic press.

TOOLS:

Driver	**07749-0010000**
Attachment, 37 X 40 mm	**07746-0010200**
Pilot, 28 mm	**07746-0041100**

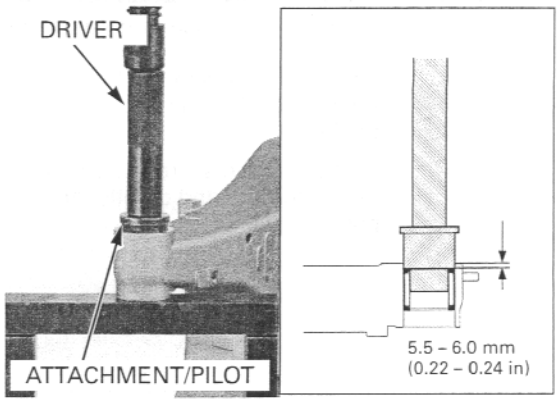

Press new right pivot bearings (radial ball bearing) in until it seats, using the special tools and a hydraulic press.

TOOLS:

Driver	**07749-0010000**
Attachment, 37 X 40 mm	**07746-0010200**
Pilot, 20 mm	**07746-0040500**

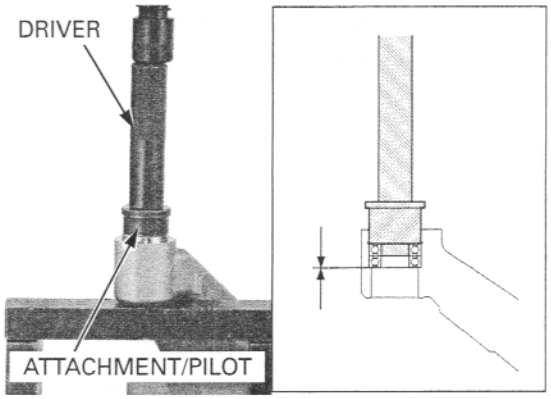

Install the snap ring into the groove securely.

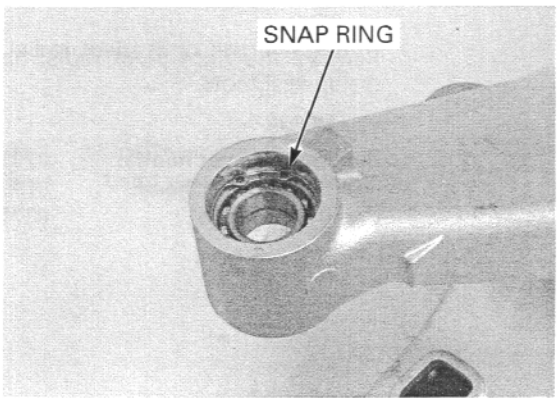

Shock link plate bearing replacement

Remove the pivot collar and dust seals from the shock link plate pivot of the swingarm.

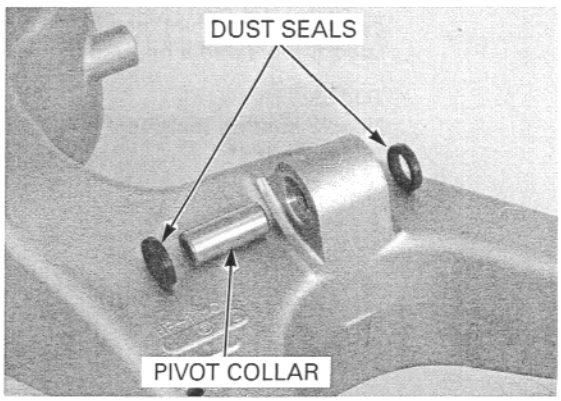

Draw the needle bearing out of swingarm using the special tool.

TOOL:
Bearing remover set **07LMC-KV30100**

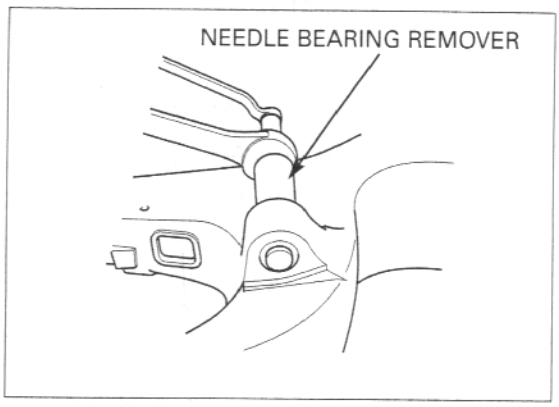

Apply grease to the needle rollers of the new bearing.
Install the needle bearing into the pivot until the depth from the swingarm outer surface is 5.5 – 6.0 mm (0.22 – 0.24 in), using the same tool.

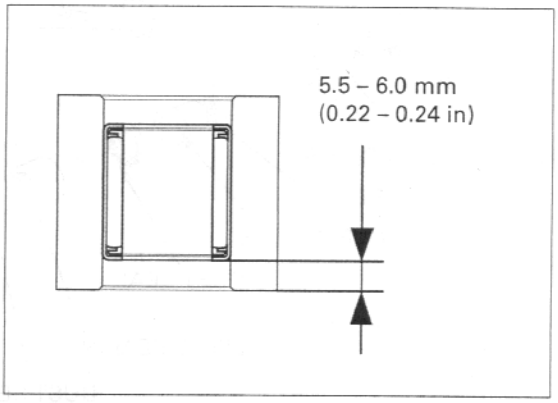

Apply grease to the dust seal lips, then install the dust seals and pivot collar into the swingarm.

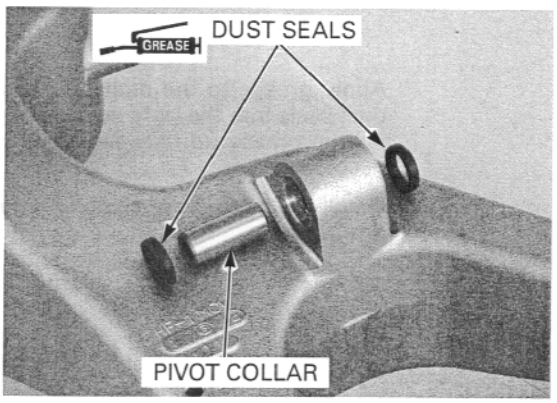

ASSEMBLY

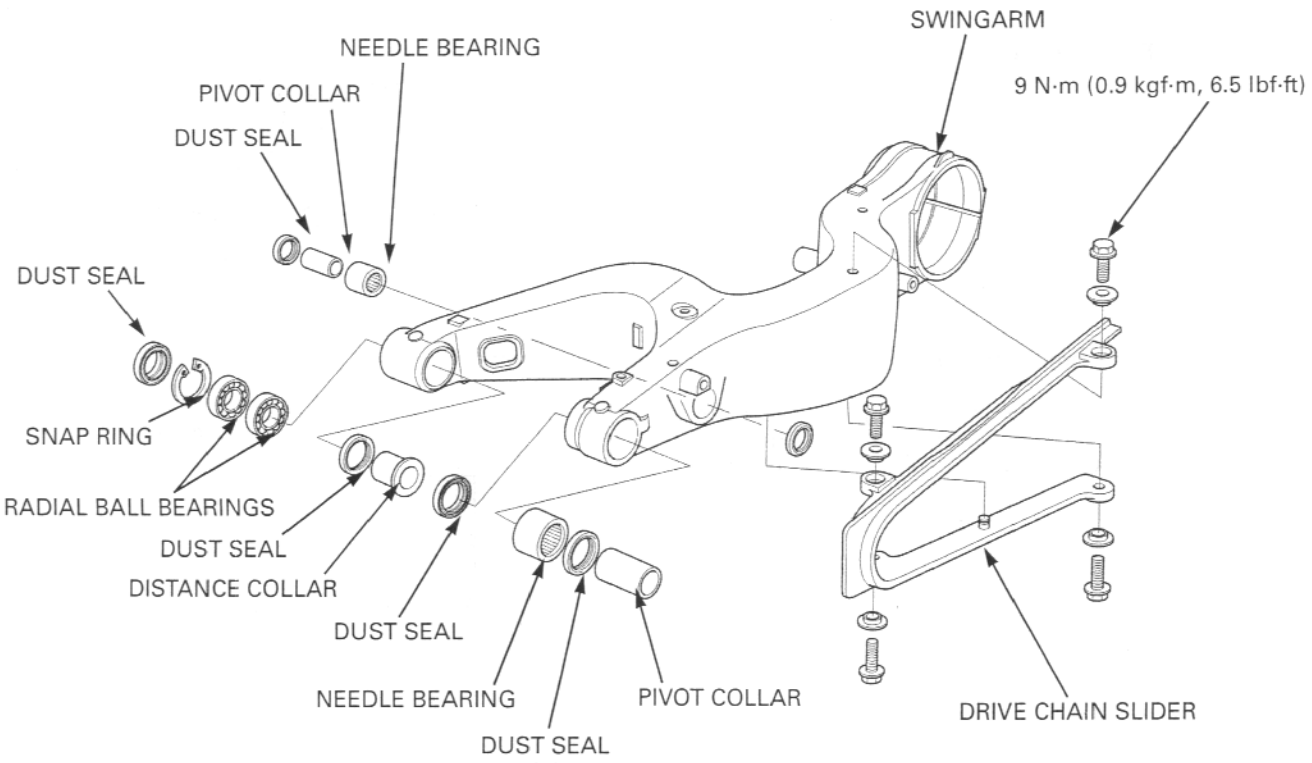

Apply grease to the dust seal lips, then install the dust seals into the right swingarm pivot.
Fill the grease up between the inner dust seal and needle bearing.

Install the pivot distance collar into the right swingarm pivot.

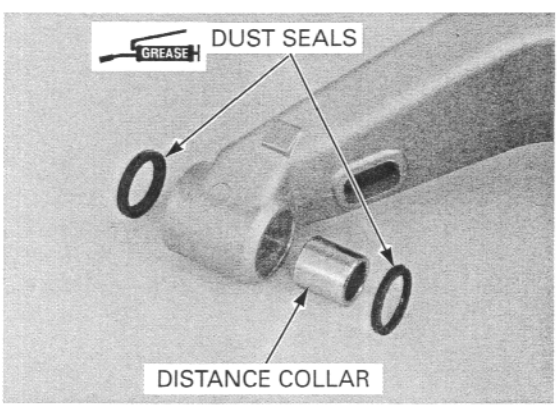

Apply grease to the dust seal lips, then install the dust seals and pivot collar into the left swingarm pivot.

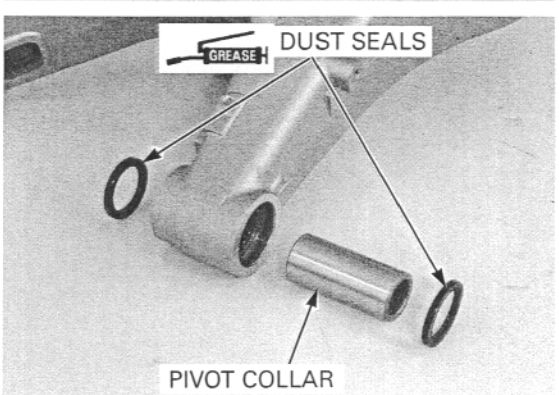

Install the drive chain slider bosses into the hole in the swingarm.

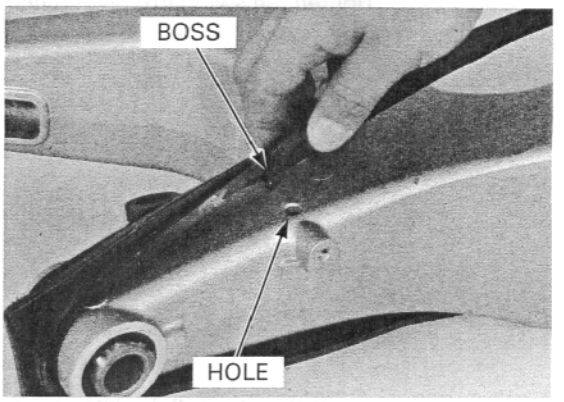

Install and tighten the new drive chain slider flange bolts to the specified torque.

TORQUE: 9 N·m (0.9 kgf·m, 6.5 lbf·ft)

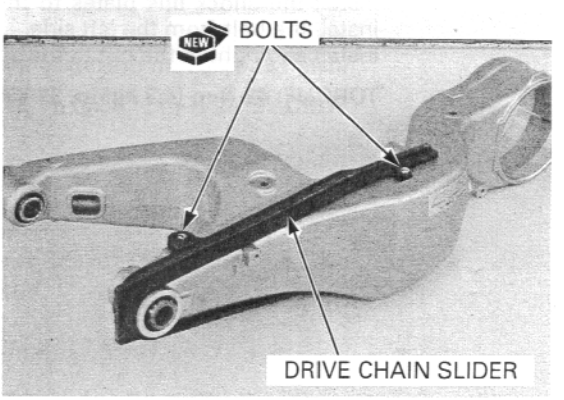

INSTALLATION

Install the swingarm onto the engine and suspension bracket.

Apply thin coat of grease to the swingarm pivot bolt surface.
Install the swingarm pivot bolt from the left side.

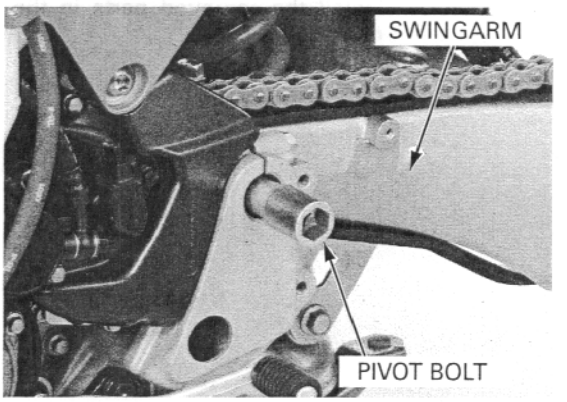

Install and tighten the swingarm pivot nut to the specified torque.

TORQUE: 93 N·m (9.5 kgf·m, 69 lbf·ft)

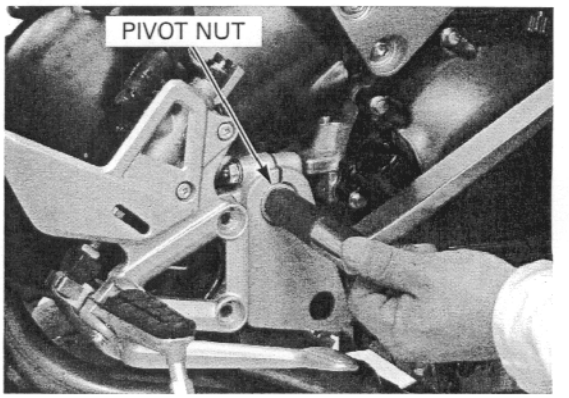

Tighten the swingarm pivot pinch bolts.

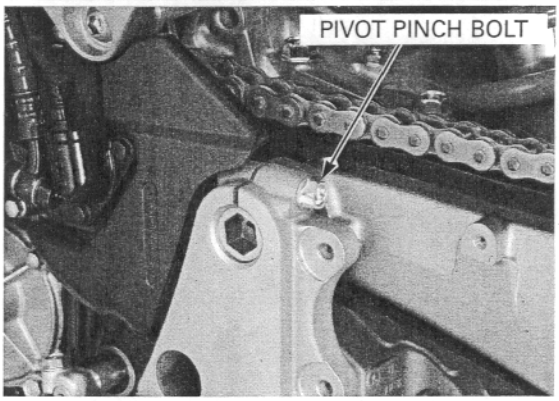

Install the shock link plates to the swingarm, then install the bolt from the left side.
Install and tighten the nut to the specified torque.

TORQUE: 42 N·m (4.3 kgf·m, 31 lbf·ft)

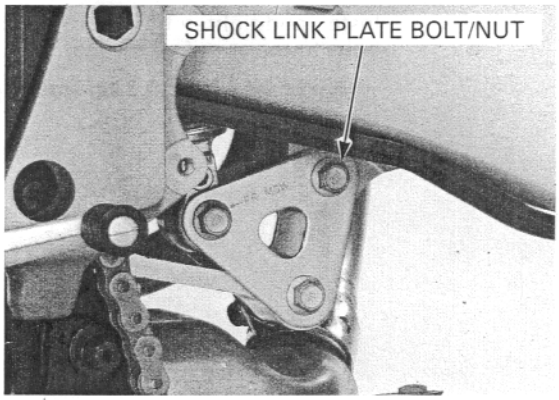

Install the brake hose guide and axle pinch bolt.

Install the removed parts in the reverse order of removal.

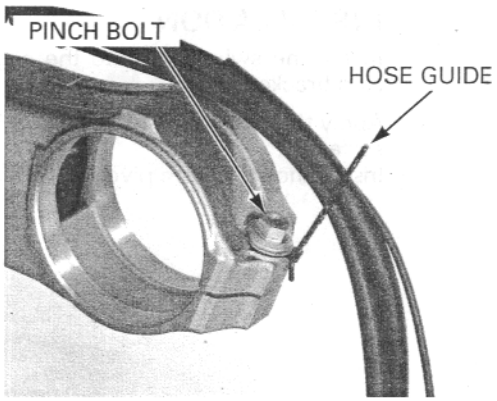

15. HYDRAULIC BRAKE

COMPONENT LOCATION 15-2

SERVICE INFORMATION 15-4

TROUBLESHOOTING 15-6

BRAKE FLUID REPLACEMENT/AIR BLEEDING 15-7

BRAKE PAD/DISC 15-17

FRONT MASTER CYLINDER 15-20

SECONDARY MASTER CYLINDER 15-25

REAR MASTER CYLINDER 15-28

PROPORTIONAL CONTROL VALVE 15-33

FRONT BRAKE CALIPER 15-35

REAR BRAKE CALIPER 15-41

BRAKE PEDAL 15-46

COMPONENT LOCATION

FRONT:

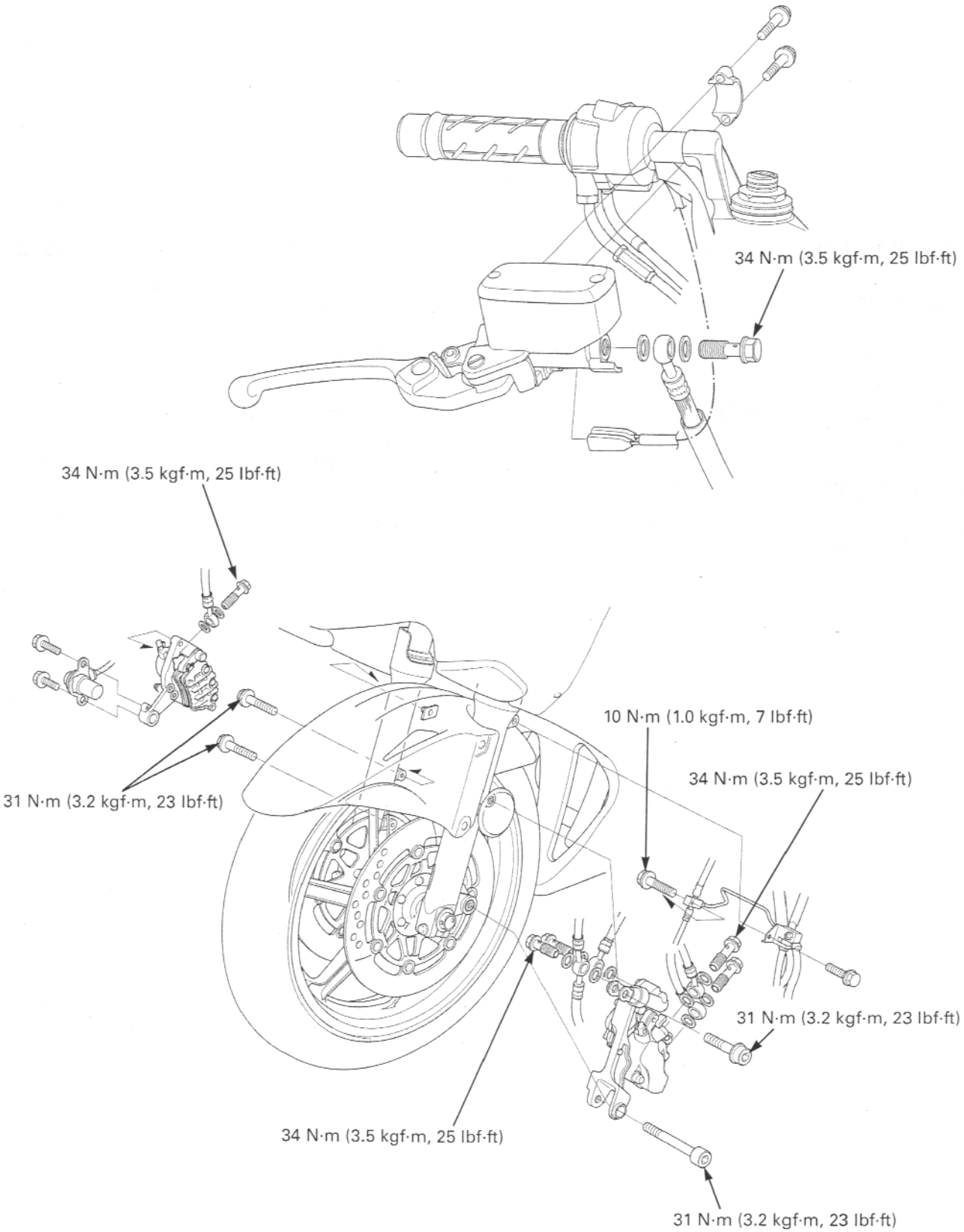

REAR:

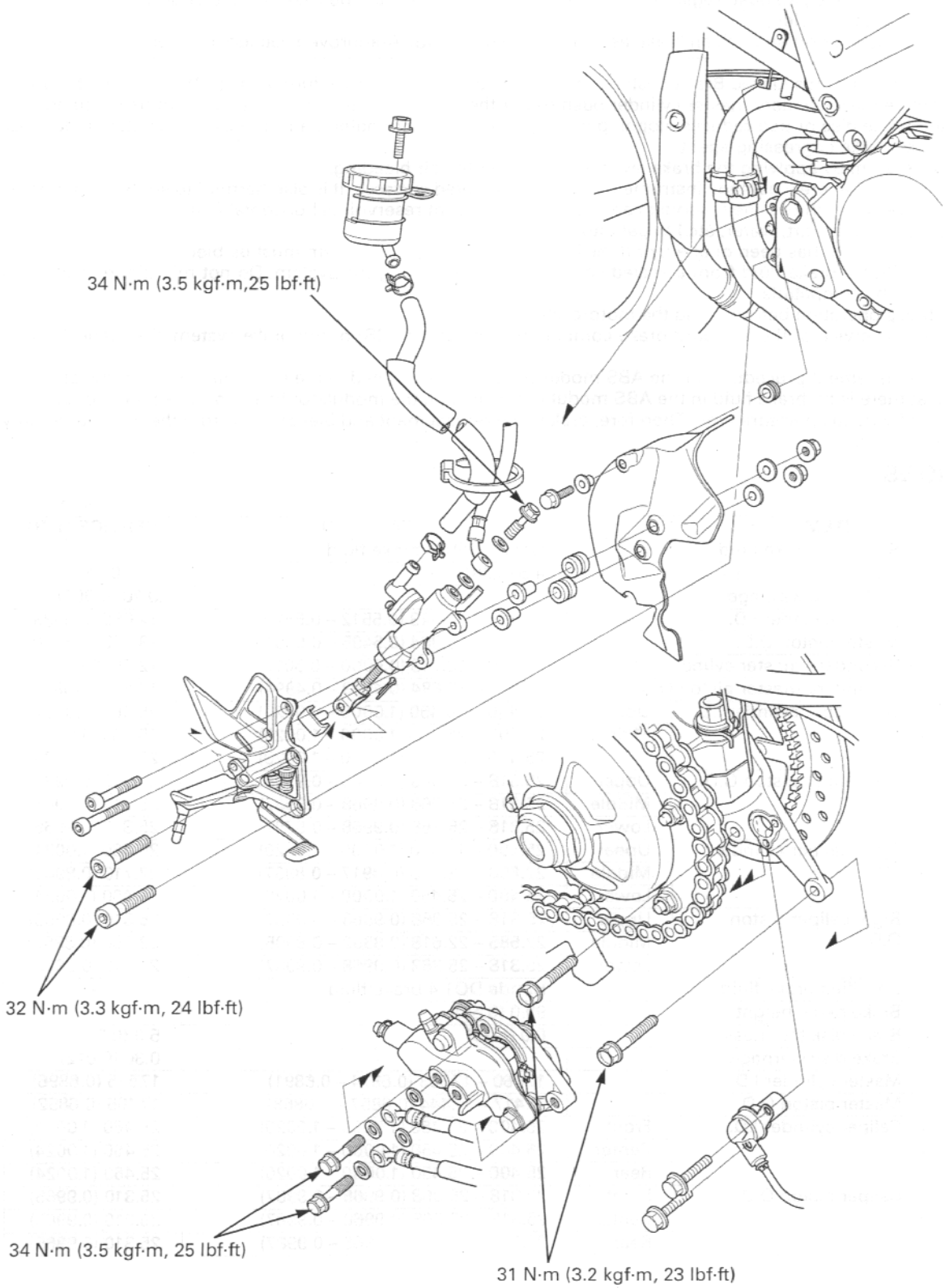
34 N·m (3.5 kgf·m,25 lbf·ft)
32 N·m (3.3 kgf·m, 24 lbf·ft)
34 N·m (3.5 kgf·m, 25 lbf·ft)
31 N·m (3.2 kgf·m, 23 lbf·ft)

SERVICE INFORMATION

GENERAL

⚠CAUTION

Frequent inhalation of brake pad dust, regardless of material composition could be hazardous to your health.
- Avoid breathing dust particles.
- Never use an air hose or brush to clean brake assemblies. Use and OSHA-approved vacuum cleaner.

- This model is equipped with a Linked Brake System. The system air bleeding procedure on page 15-7 must be followed.
- Do not disassemble the secondary master cylinder push rod or the correct brake performance will not be obtained.
- A contaminated brake disc or pad reduces stopping power. Discard contaminated pads and clean a contaminated disc with a high quality brake degreasing agent.
- Check the brake system by applying the brake lever or pedal after the air bleeding.
- Spilled brake fluid will severely damage instrument lenses and painted surfaces. It is also harmful to some rubber parts. Be careful whenever you remove the reservoir cap; make sure the front reservoir is horizontal first.
- Never allow contaminates (dirt, water, etc.) to get into an open reservoir.
- Once the hydraulic system has been opened, or if the brake feels spongy, the system must be bled.
- Always use fresh DOT 4 brake fluid from a sealed container when servicing the system. Do not mix different types of fluid, they may not be compatible.
- Always check brake operation before riding the motorcycle.
- This section covers service of the standard brake components (including LBS) of the brake system. See page 16-3 for ABS service.
- The brake fluid replacement procedure for the ABS model should be performed in the same manner as in the standard model. Note that there is no brake fluid in the ABS modulator (except in the modulator head), because the modulator is the motor-driven hydraulic pressure type. Therefore, brake fluid replacement and bleeding air from the modulator body is not necessary.

SPECIFICATIONS

Unit: mm (in)

ITEM			STANDARD	SERVICE LIMIT
Front	Specified brake fluid		Honda DOT 4 brake fluid	–
	Brake disc thickness		4.5 (0.18)	3.5 (0.14)
	Brake disc warpage		–	0.20 (0.008)
	Master cylinder I.D.		14.000 – 14.043 (0.5512 – 0.5529)	14.055 (0.5533)
	Master piston O.D.		13.957 – 13.984 (0.5495 – 0.5506)	13.945 (0.5490)
	Secondary master cylinder I.D.		12.700 – 12.743 (0.5000 – 0.5017)	12.76 (0.502)
	Secondary master piston O.D.		12.657 – 12.684 (0.4983 – 0.4994)	12.65 (0.498)
	Left caliper cylinder I.D.	Upper	25.400 – 25.450 (1.0000 – 1.0020)	25.460 (1.0024)
		Middle	25.400 – 25.450 (1.0000 – 1.0020)	25.460 (1.0024)
		Lower	25.400 – 25.450 (1.0000 – 1.0020)	25.460 (1.0024)
	Left caliper piston O.D.	Upper	25.318 – 25.368 (0.9968 – 0.9987)	25.310 (0.9965)
		Middle	25.318 – 25.368 (0.9968 – 0.9987)	25.310 (0.9965)
		Lower	25.318 – 25.368 (0.9968 – 0.9987)	25.310 (0.9965)
	Right caliper cylinder I.D.	Upper	25.400 – 25.450 (1.0000 – 1.0020)	25.460 (1.0024)
		Middle	22.650 – 22.700 (0.8917 – 0.8937)	22.710 (0.8941)
		Lower	25.400 – 25.450 (1.0000 – 1.0020)	25.460 (1.0024)
	Right caliper piston O.D.	Upper	25.318 – 25.368 (0.9968 – 0.9987)	25.310 (0.9965)
		Middle	22.585 – 22.618 (0.8892 – 0.8905)	22.560 (0.8882)
		Lower	25.318 – 25.368 (0.9968 – 0.9987)	25.310 (0.9965)
Rear	Specified brake fluid		Honda DOT 4 brake fluid	–
	Brake pedal height		90.0 (3.54)	–
	Brake disk thickness		6.0 (0.23)	5.0 (0.20)
	Brake disc warpage		–	0.30 (0.012)
	Master cylinder I.D.		17.460 – 17.503 (0.6874 – 0.6891)	17.515 (0.6896)
	Master piston O.D.		17.417 – 17.444 (0.6857 – 0.6868)	17.405 (0.6852)
	Caliper cylinder I.D.	Front	25.400 – 25.450 (1.0000 – 1.0020)	25.460 (1.0024)
		Center	25.400 – 25.450 (1.0000 – 1.0020)	25.460 (1.0024)
		Rear	25.400 – 25.450 (1.0000 – 1.0020)	25.460 (1.0024)
	Caliper piston O.D.	Front	25.318 – 25.368 (0.9968 – 0.9987)	25.310 (0.9965)
		Center	25.318 – 25.368 (0.9968 – 0.9987)	25.310 (0.9965)
		Rear	25.318 – 25.368 (0.9968 – 0.9987)	25.310 (0.9965)

TORQUE VALUES

Front master cylinder reservoir cap screw	2 N·m (0.2 kgf·m, 1.4 lbf·ft)	
Brake lever pivot bolt	1 N·m (0.1 kgf·m, 0.7 lbf·ft)	
Brake lever pivot nut	6 N·m (0.6 kgf·m, 4.3 lbf·ft)	
Front brake light switch screw	1 N·m (0.1 kgf·m, 0.7 lbf·ft)	
Right front brake caliper mounting bolt	31 N·m (3.2 kgf·m, 23 lbf·ft)	ALOC bolt; replace with a new one
Left front brake caliper pivot bolt	31 N·m (3.2 kgf·m, 23 lbf·ft)	ALOC bolt; replace with a new one
Left front brake caliper bolt (second master joint)	31 N·m (3.2 kgf·m, 23 lbf·ft)	ALOC bolt; replace with a new one
Caliper body B bolt	32 N·m (3.3 kgf·m, 24 lbf·ft)	ALOC bolt; replace with a new one
Front caliper main slide pin	23 N·m (2.3 kgf·m, 17 lbf·ft)	
Front caliper sub slide pin	13 N·m (1.3 kgf·m, 9 lbf·ft)	
Pad pin	18 N·m (1.8 kgf·m, 13 lbf·ft)	
Brake caliper bleed valve	6 N·m (0.6 kgf·m, 4.3 lbf·ft)	
Second master cylinder connector	10 N·m (1.0 kgf·m, 7 lbf·ft)	Apply a locking agent to the threads
Rear master cylinder push rod joint nut	18 N·m (1.8 kgf·m, 13 lbf·ft)	
Rear master cylinder reservoir hose joint screw	2 N·m (0.15 kgf·m, 1.1 lbf·ft)	
Brake hose oil bolt	34 N·m (3.5 kgf·m, 25 lbf·ft)	
Brake pipe joint	17 N·m (1.7 kgf·m, 12 lbf·ft)	Apply oil to the threads
PCV air bleed valve	8 N·m (0.8 kgf·m, 5.8 lbf·ft)	
Rear brake caliper mounting bolt	31 N·m (3.2 kgf·m, 23 lbf·ft)	ALOC bolt; replace with a new one
Footpeg bracket bolt	32 N·m (3.3 kgf·m, 24 lbf·ft)	
Front brake hose clamp flange bolt (left side)	10 N·m (1.0 kgf·m, 7 lbf·ft)	
Front brake hose clamp flange bolt (right side)	10 N·m (1.0 kgf·m, 7 lbf·ft)	
Front brake hose clamp flange bolt (steering stem)	10 N·m (1.0 kgf·m, 7 lbf·ft)	

TOOLS

Snap ring pliers	07914-SA50001

TROUBLESHOOTING

Brake lever/pedal soft or spongy
- Air in hydraulic system
- Leaking hydraulic system
- Contaminated brake pad/disc
- Worn caliper piston seal
- Worn master cylinder piston cups
- Worn brake pad/disc
- Contaminated caliper
- Caliper not sliding properly
- Low brake fluid level
- Clogged fluid passage
- Warped/deformed brake disc
- Sticking/worn caliper piston
- Sticking/worn master cylinder piston
- Contaminated master cylinder
- Bent brake lever/pedal

Above items are normal but the brake system still has poor performance, check for nose dive during braking. If the nose dive is excessive, check for secondary master cylinder hydraulic system.

Brake lever/pedal hard
- Clogged/restricted brake system
- Sticking/worn caliper piston
- Caliper not sliding properly
- Clogged/restricted fluid passage
- Worn caliper piston seal
- Sticking/worn master cylinder piston
- Bent brake lever/pedal

Brake drags
- Contaminated brake pad/disc
- Misaligned wheel
- Clogged/restricted brake hose joint
- Warped/deformed brake disc
- Caliper not sliding properly
- Clogged/restricted brake hydraulic system
- Sticking/worn caliper piston
- Clogged master cylinder port

Rear wheel locks when only the brake lever is applied/Front wheel locks when only the brake pedal is applied (in the case that all items are normal in "Poor lever/pedal brake performance")
- Improper secondary master cylinder push rod installed length
- Faulty proportional control valve

BRAKE FLUID REPLACEMENT/AIR BLEEDING

A contaminated brake disc or pad reduces stopping power. Discard contaminated pads and clean a contaminated disc with a high quality brake degreasing agent.

Once the hydraulic system has been opened, or if the brake feels spongy, the system must be bled.

When using a commercially available air brake bleeder, follow the manufacturer's operating instructions.

BRAKE FLUID DRAINING

Lever brake line:

Turn the handlebar until the reservoir is parallel to the ground, before removing the reservoir cap.
Remove the screws and reservoir cap.
Remove the diaphragm plate and diaphragm.

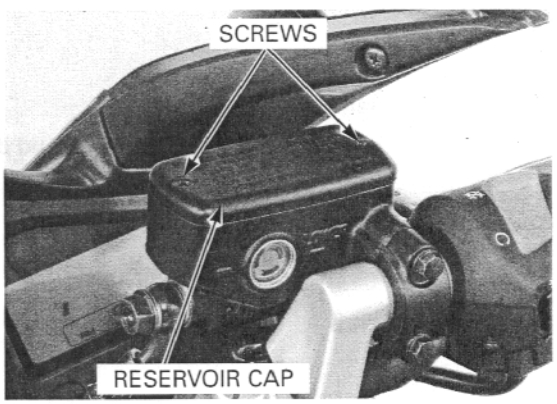

Connect a commercially available air bleed tool to the left front brake caliper outer bleed valve.
Loosen the outer bleed valve and operate the air bleed tool.
Drain the brake fluid.

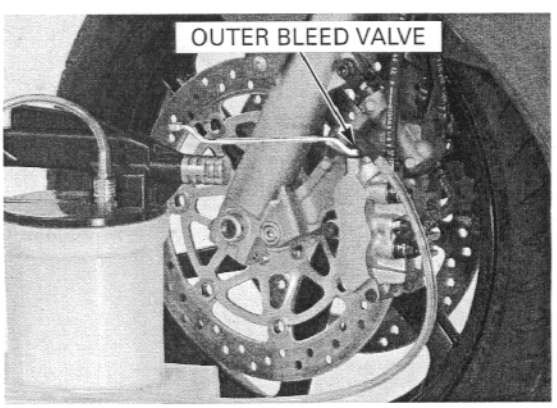

Connect a commercially available air bleeding tool to the right front brake caliper bleed valve.
Loosen the bleed valve and operate the air bleed tool.
Drain the brake fluid.

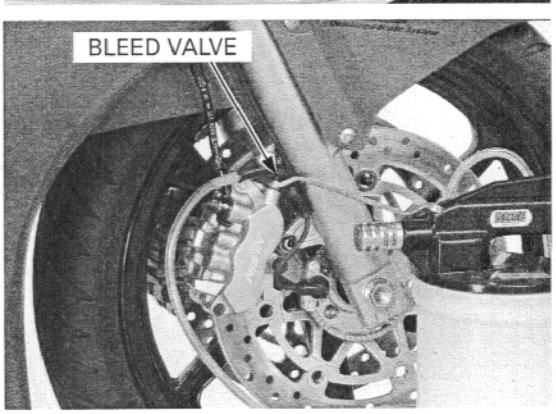

Pedal brake line:

Remove the three trim clips and right seat rail cover.



Remove the reservoir cap.

Remove the diaphragm plate and diaphragm.

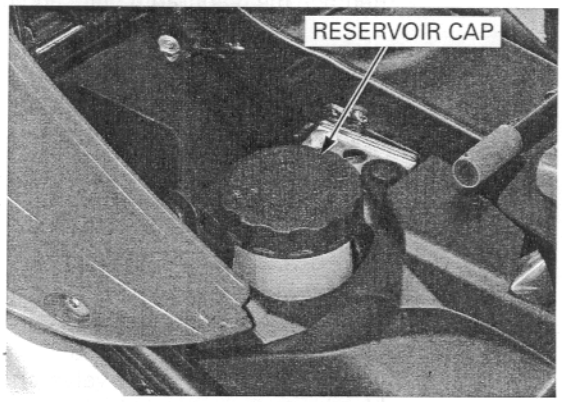

Connect a commercially available air bleed tool to the left front brake caliper center bleed valve.
Loosen the bleed valve and operate a air bleed tool.
Drain the brake fluid.

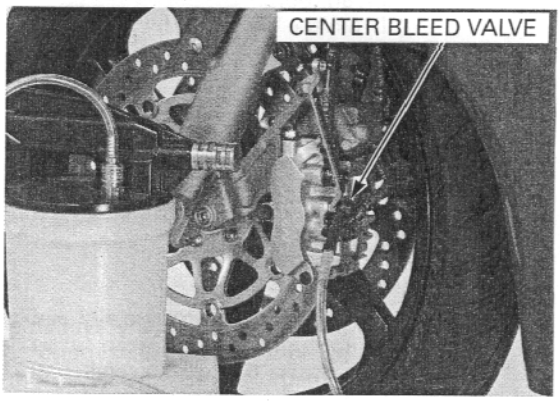

Remove the bolts and rear brake caliper from the bracket.
Reinstall the brake caliper onto the brake disc as shown.

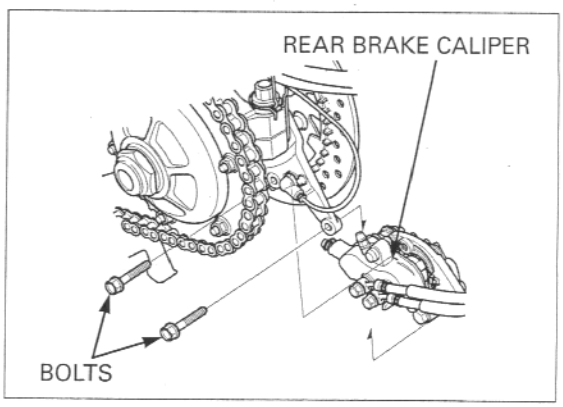

Connect a commercially available air bleed tool to the rear brake caliper outer bleed valve.
Loosen the outer bleed valve and operate a air bleed tool.
Drain the brake fluid.

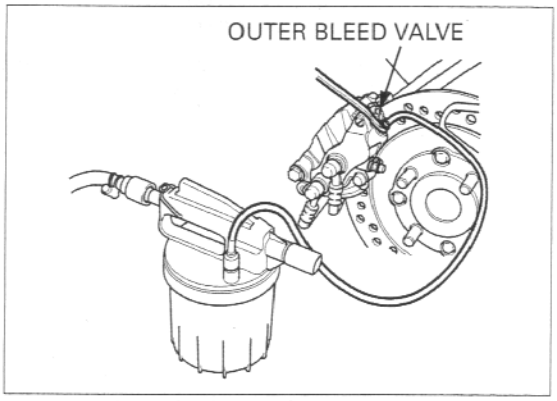

Connect a commercially available air bleeding tool to the rear brake caliper center bleed valve.
Loosen the center bleed valve and operate the air bleed tool.
Drain the brake fluid.

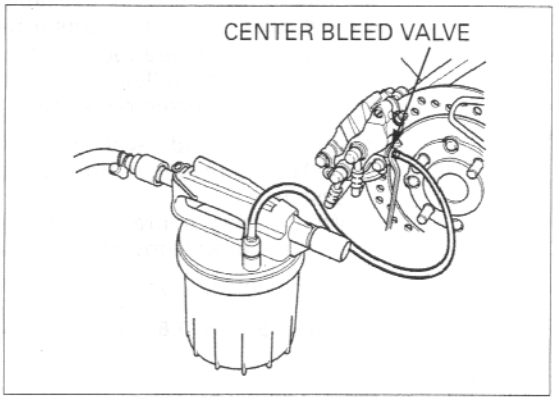

BRAKE FLUID FILLING/AIR BLEEDING

Lever brake line (master cylinder-to-front brake caliper)

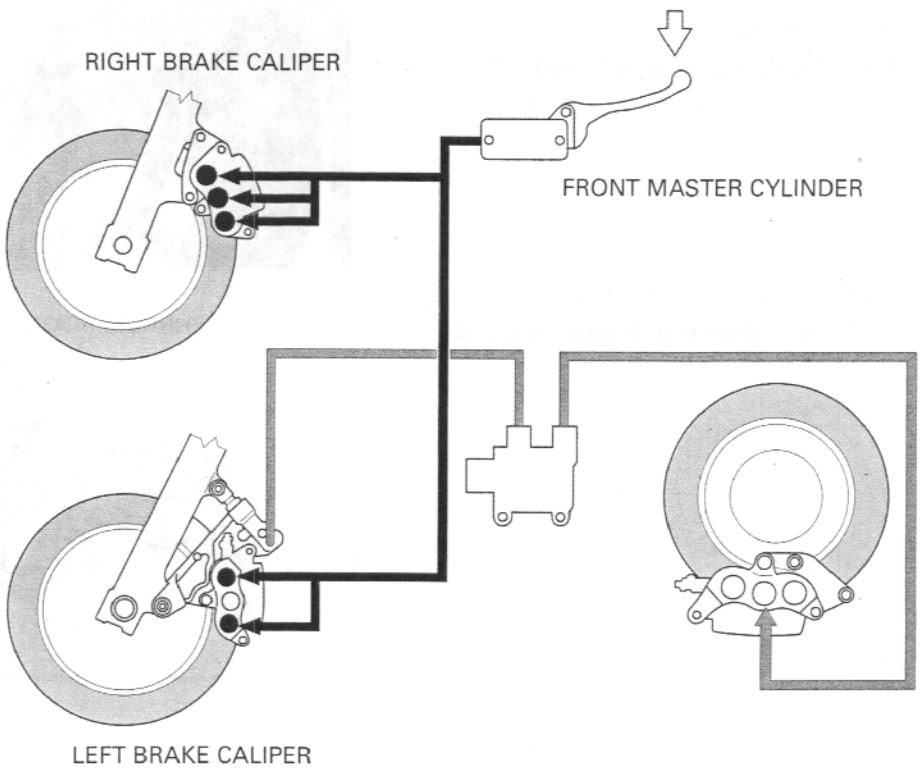

Use only DOT 4 brake fluid from a sealed container. Do not mix different types of fluid. They are not compatible.

Fill the reservoir with DOT 4 brake fluid from a sealed container.

Operate the brake lever several times to bleed air from the master cylinder.

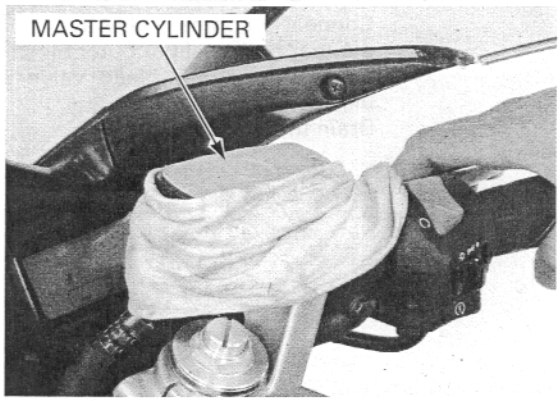

If air is entering the bleeder from around the breed valve threads, seal the threads with teflon tape.

Connect a commercially available air bleed tool to the left front brake caliper outer bleed valve.
Operate the air bleed tool and loosen the outer bleed valve, adding fluid when the fluid level in the master cylinder reservoir is low.

- Check the fluid level often while bleeding the brakes to prevent air from being pumped into the system.
- When using a brake bleeding tool, follow the manufacturer's operating instructions.

Close the bleed valve.

TORQUE: 6 N·m (0.6 kgf·m, 4.3 lbf·ft)

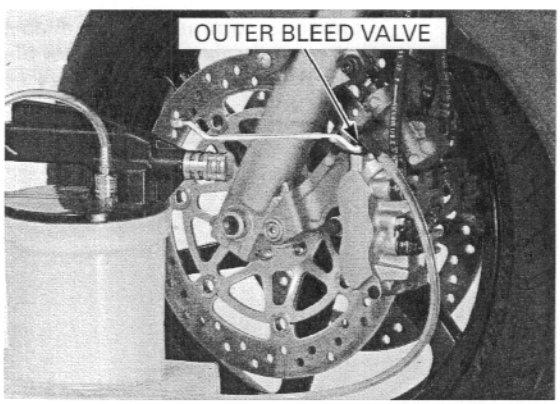

Connect a commercially available air bleed tool to the right front brake caliper bleed valve.
Operate the air bleed tool and loosen the bleed valve, adding fluid when the fluid level in the master cylinder reservoir is low.

Close the bleed valve.

TORQUE: 6 N·m (0.6 kgf·m, 4.3 lbf·ft)

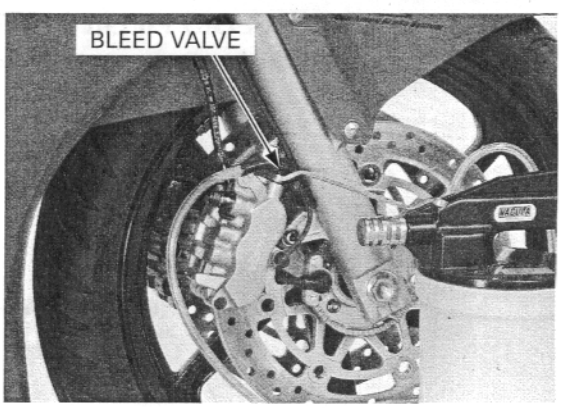

Fill the fluid reservoir to the upper level.

Reinstall the diaphragm and diaphragm plate.

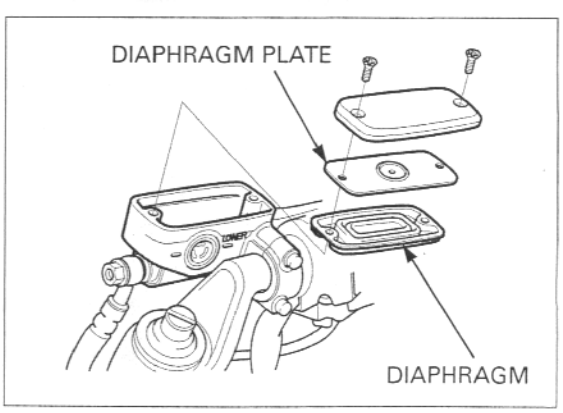

Install the reservoir cap, and tighten the screws to the specified torque.

TORQUE: 2 N·m (0.2 kgf·m, 1.4 lbf·ft)

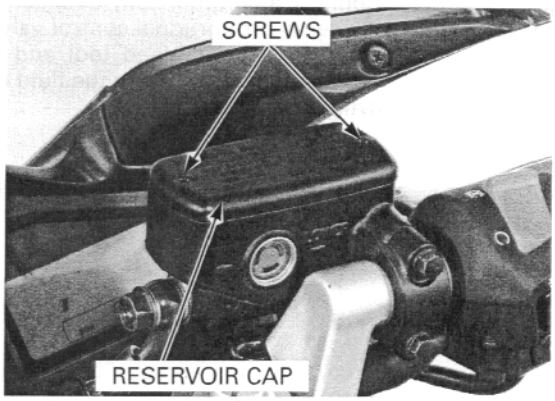

Servo brake line (second master cylinder-to-servo proportional control valve)

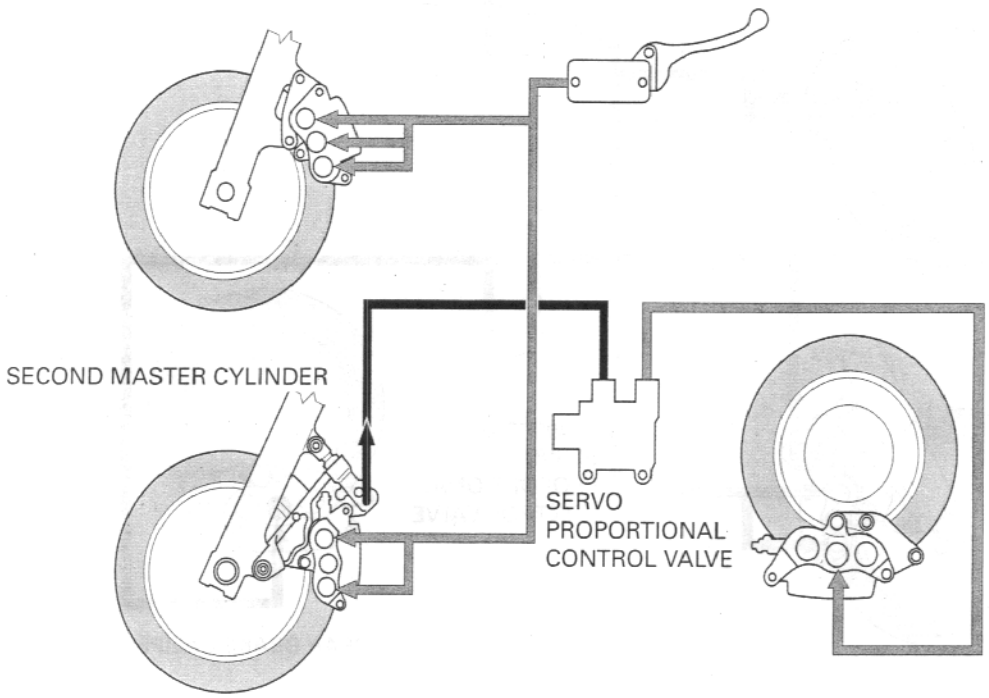

Remove the left front brake caliper, tilt the caliper about 0 - 15 degree from the ground line as shown.

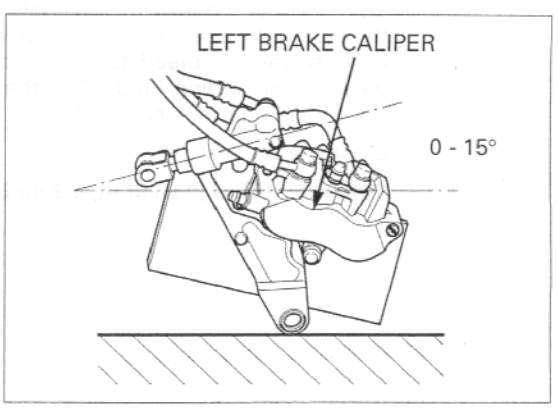

Connect a commercially available air bleed tool to the servo proportional control valve air bleed valve. Operate THE air bleed tool and loosen the bleed valve, adding fluid when the fluid level in the master cylinder reservoir is low.

Close the bleed valve.

TORQUE: 8 N·m (0.8 kgf·m, 5.8 lbf·ft)

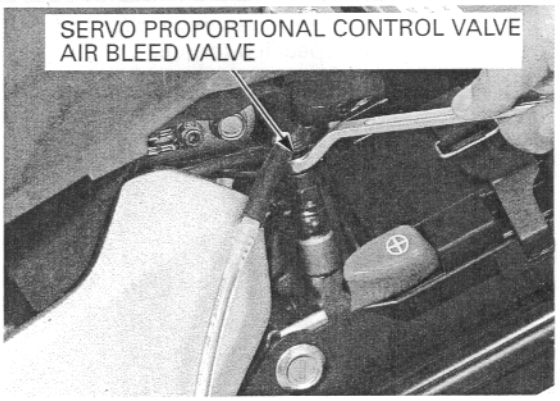

Servo brake line (rear proportional control valve-to-rear brake caliper)

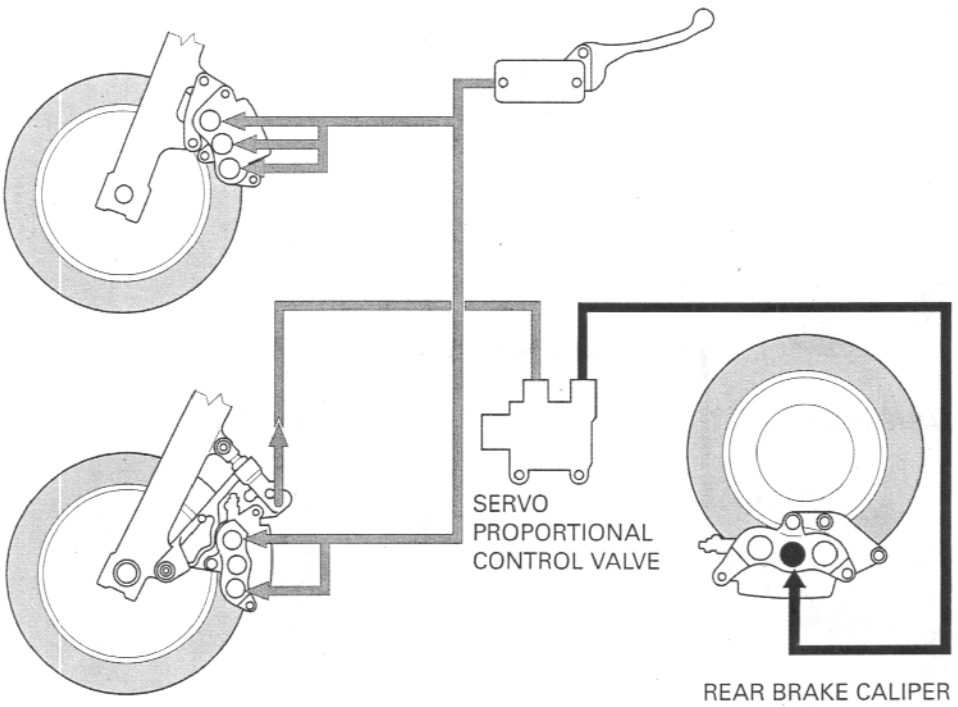

Connect a commercially available air bleed tool to the rear brake caliper center air bleed valve.
Operate the air bleed tool and loosen the center bleed valve, adding fluid when the fluid level in the master cylinder reservoir is low.

Close the bleed valve.

TORQUE: 6 N·m (0.6 kgf·m, 4.3 lbf·ft)

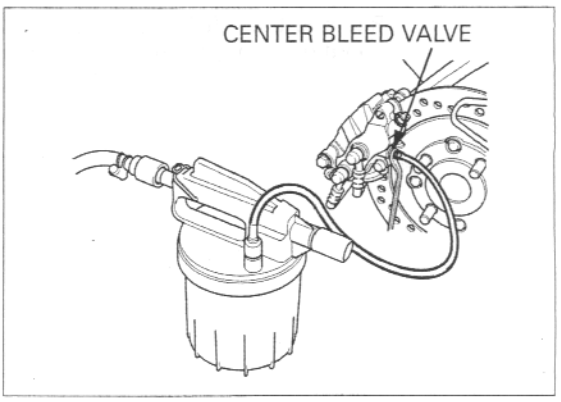

Pedal brake line (rear master cylinder-to-rear proportional control valve)

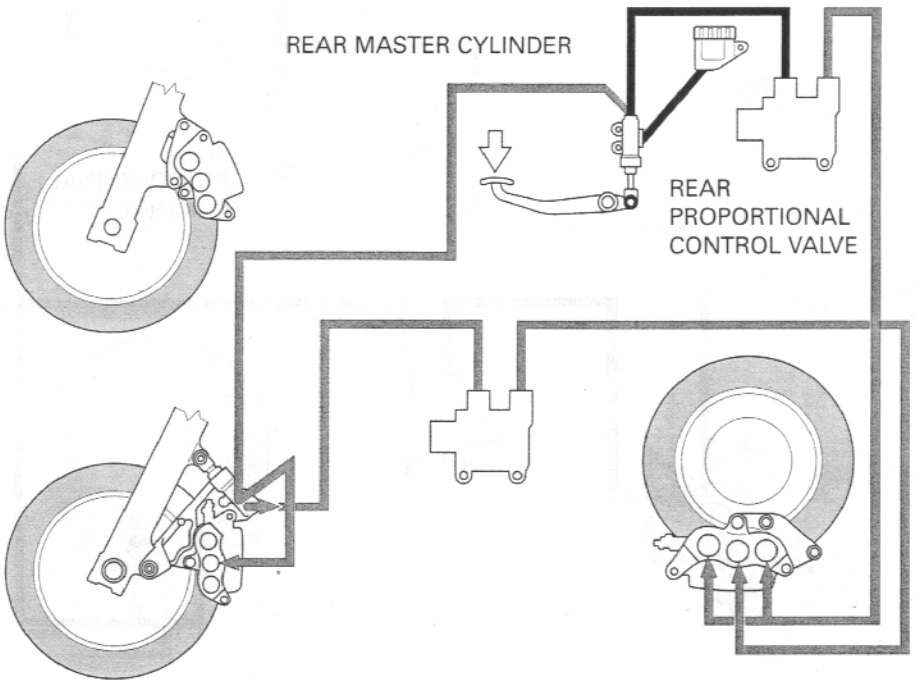

Connect a commercially available air bleed tool to the rear proportional control valve air bleed valve. Operate the air bleed tool and loosen the rear proportional control valve air bleed valve, adding fluid when the fluid level in the master cylinder reservoir is low.

Close the bleed valve.

TORQUE: 8 N·m (0.8 kgf·m, 5.8 lbf·ft)

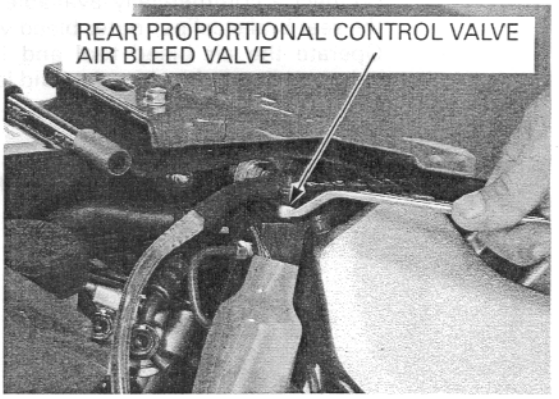

Pedal brake line (rear proportional control valve-to-rear brake caliper)

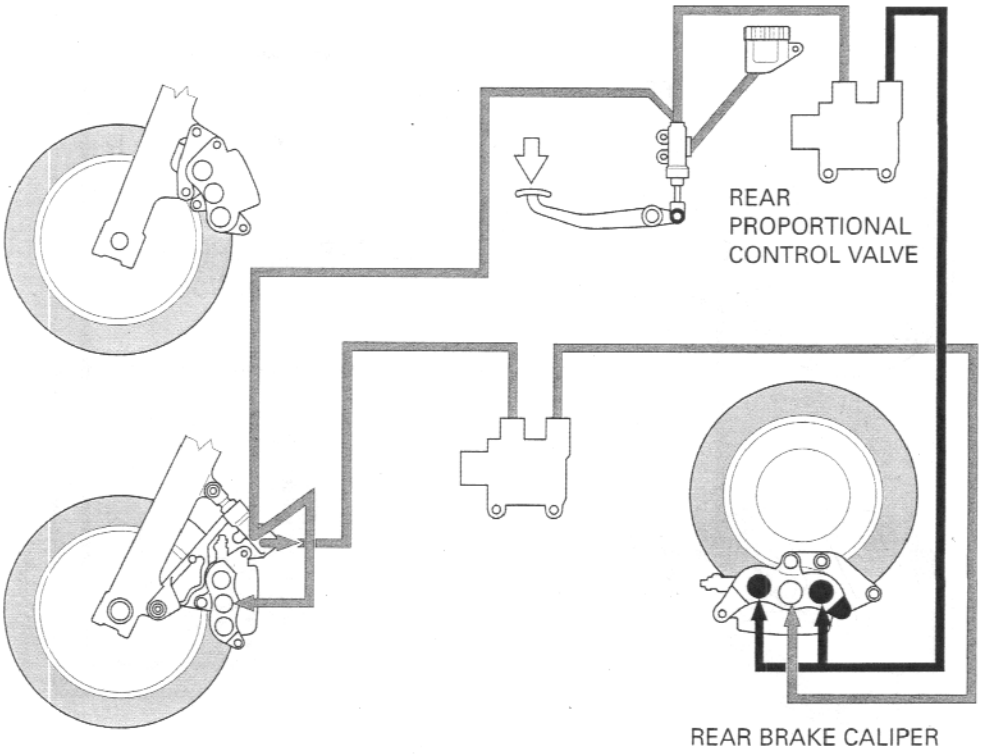

Connect a commercially available air bleed tool to the rear brake caliper outer bleed valve.
Operate the air bleed tool and loosen the bleed valve, adding fluid when the fluid level in the master cylinder reservoir is low.

Close the bleed valve.

TORQUE: 6 N·m (0.6 kgf·m, 4.3 lbf·ft)

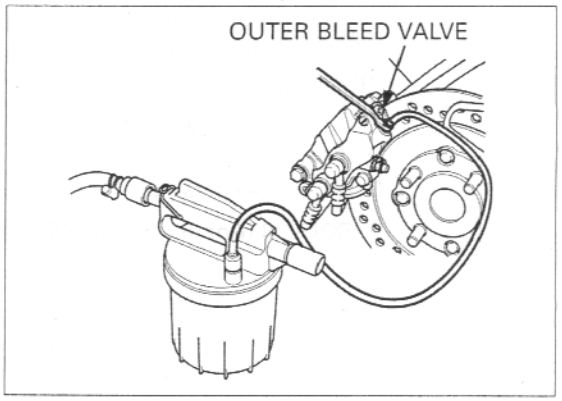

Pedal brake line (rear master cylinder-to-left front brake caliper)

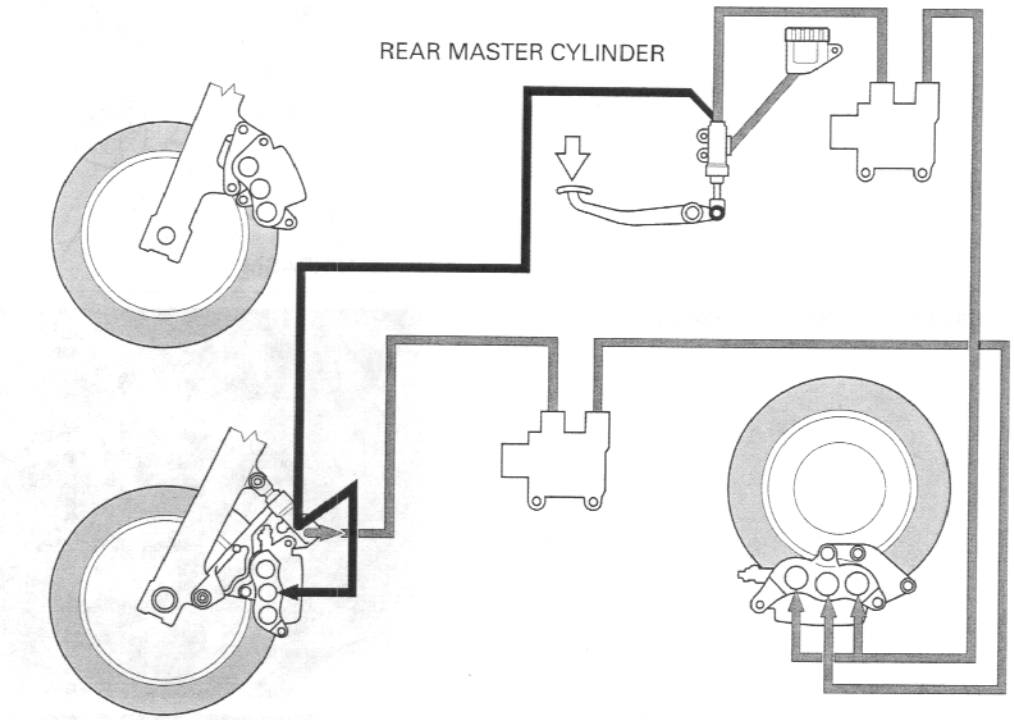

Connect a commercially available air bleed tool to the left front brake caliper center bleed valve.
Operate the air bleed tool and loosen the center bleed valve, adding fluid when the fluid level in the master cylinder reservoir is low.

Close the bleed valve.

TORQUE: 6 N·m (0.6 kgf·m, 4.3 lbf·ft)

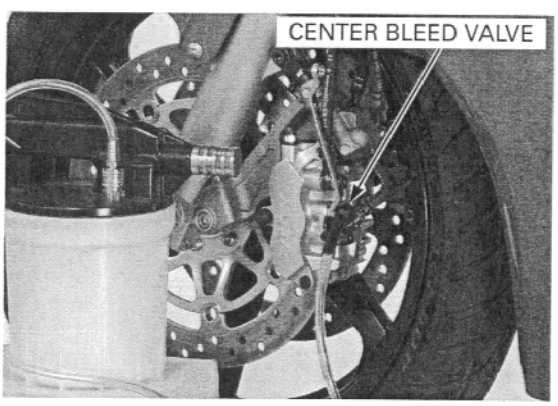

Reinstall the rear brake caliper onto the caliper bracket, and then install the new mounting bolts.

Tighten the bolts to the specified torque.

TORQUE: 31 N·m (3.2 kgf·m, 23 lbf·ft)

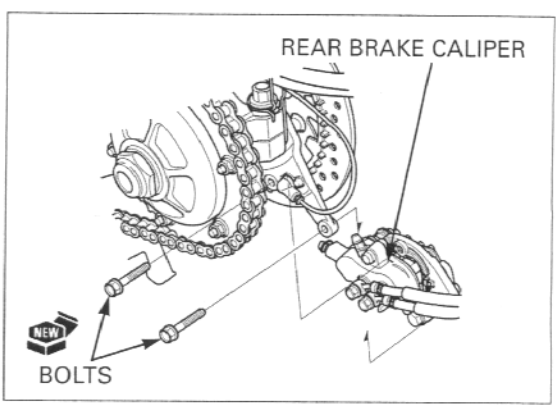

Fill the fluid reservoir to the upper level.

Reinstall the diaphragm and diaphragm plate.

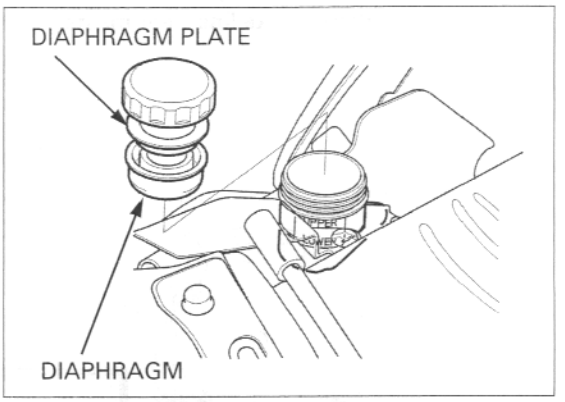

Install the reservoir cap securely.

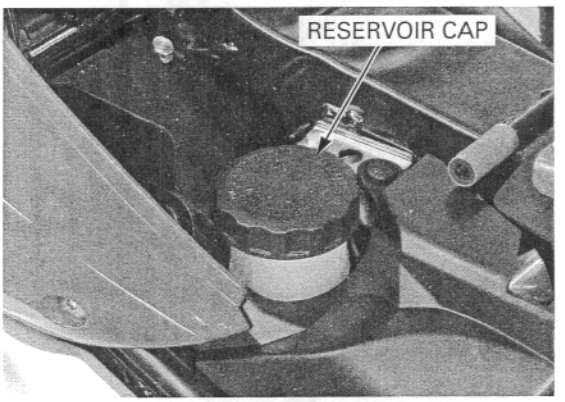

Install the right seat rail cover and secure it with two trim clips.

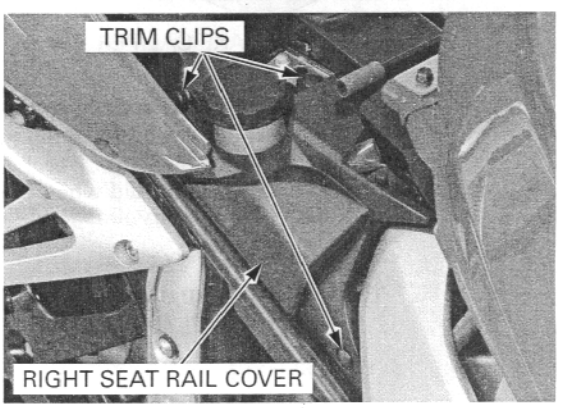

BRAKE PAD/DISC

FRONT BRAKE PAD REPLACEMENT

Always replace the brake pads in pairs to assure even disc pressure.

Check the brake fluid level in the brake master cylinder reservoir as this operation causes the level to rise.

Push the caliper pistons all the way in to allow installation of new brake pads.

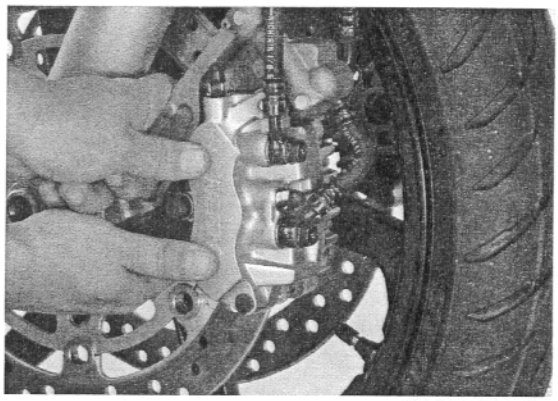

Remove the pad pin rubber plug.

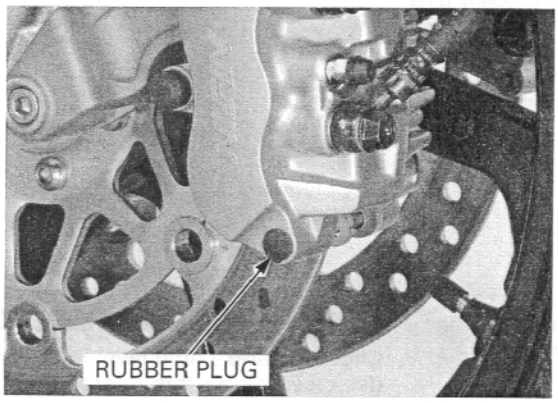

Remove the pad pin and brake pads.

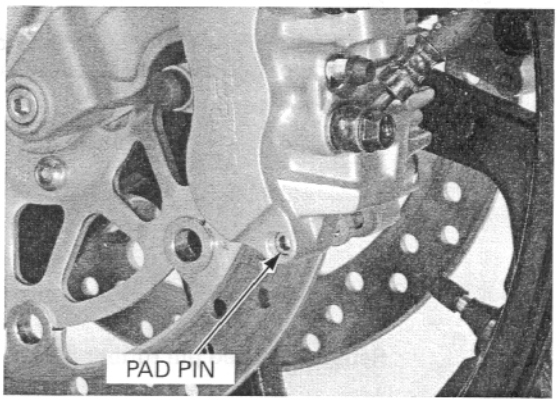

Clean the inside of the caliper especially around the caliper pistons.

Make sure the brake pad spring is in place.
Push the new brake pads against the pad spring, then install the pad pin.

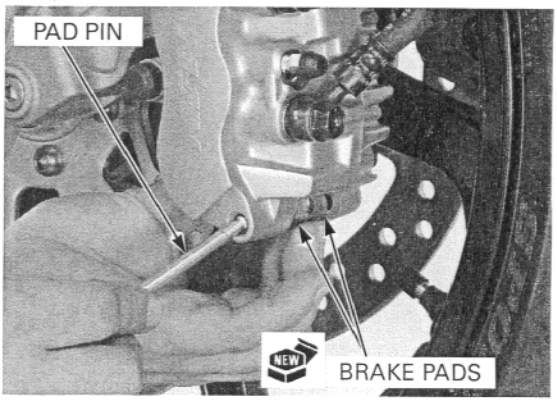

Tighten the pad pin to the specified torque.

TORQUE: 18 N·m (1.8 kgf·m, 13 lbf·ft)

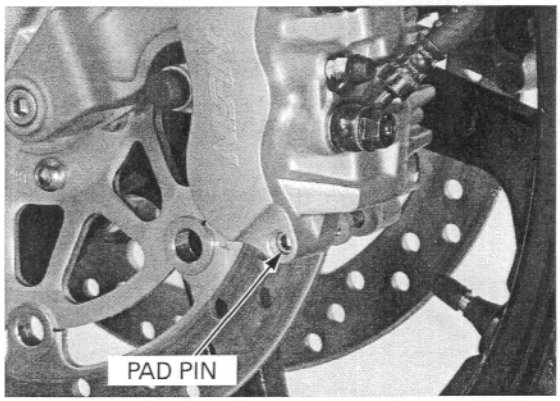

After the brake pad replacement, check the brake operation by applying the brake lever or pedal.

Install the pad pin rubber plug.

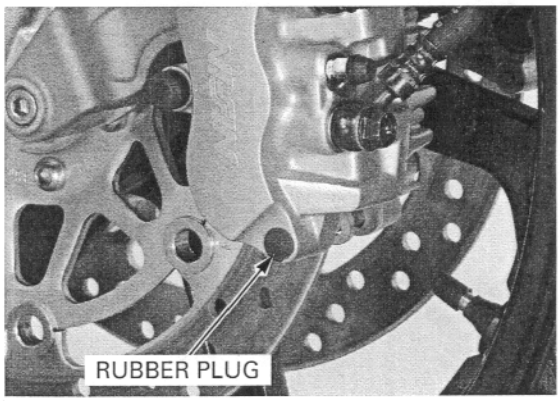

Always replace the brake pads in pairs to assure even disc pressure.

REAR BRAKE PAD REPLACEMENT

Check the brake fluid level in the brake master cylinder reservoir as this operation causes the level to rise.

Push the caliper pistons all the way in by pushing the caliper body inward to allow installation of new brake pads.

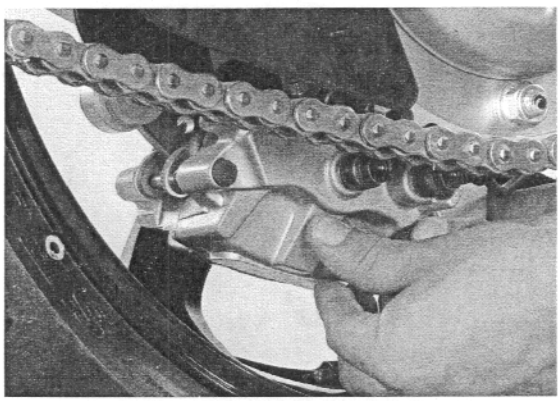

Remove the pad pin rubber plug.

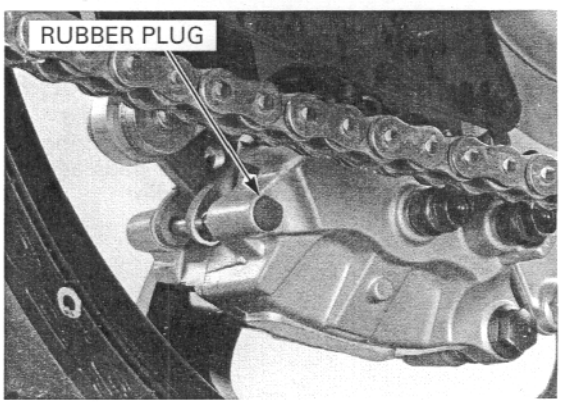

Remove the pad pin and brake pads.

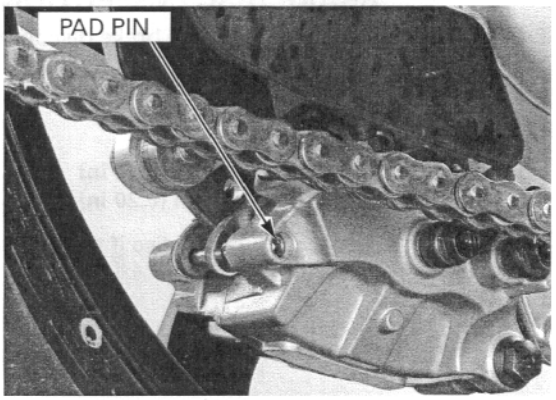

Clean the inside of the caliper especially around the caliper pistons.

Make sure the new brake pad spring is in place. Push the brake pads against the pad spring, then install the pad pin.

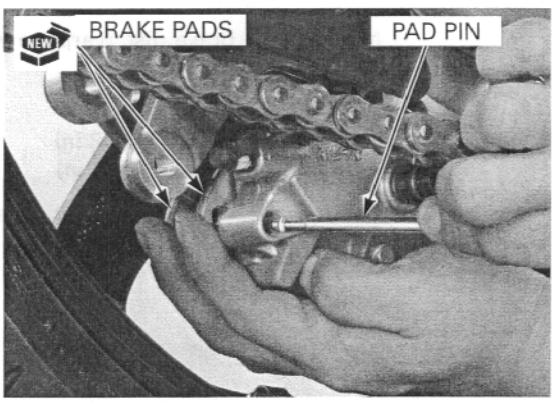

Tighten the pad pin to the specified torque.

TORQUE: 18 N·m (1.8 kgf·m, 13 lbf·ft)

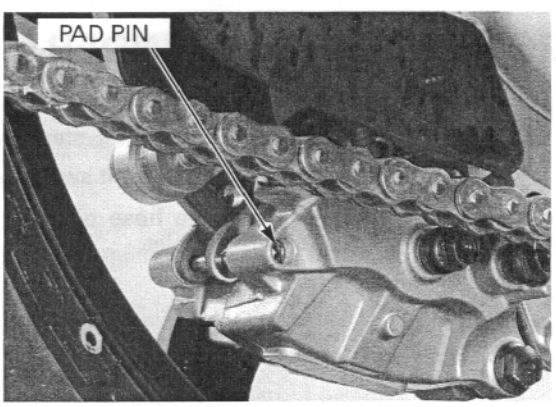

After the brake pad replacement, check the brake operation by applying the brake lever or pedal.

Install the pad pin rubber plug.

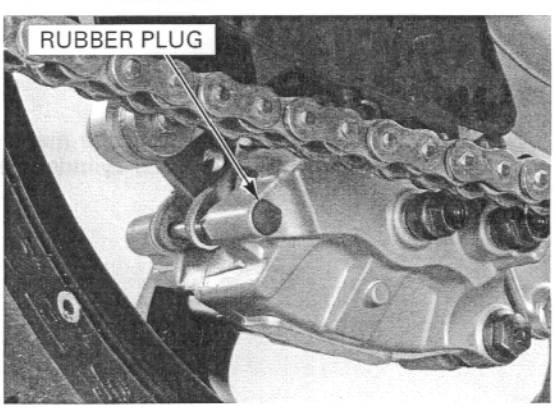

BRAKE DISC INSPECTION

Visually inspect the brake disc for damage or crack.

Measure the brake disc thickness with a micrometer.

SERVICE LIMITS:
FRONT: 3.5 mm (0.14 in)
REAR: 5.0 mm (0.20 in)

Replace the brake disc if the smallest measurement is less than the service limit.

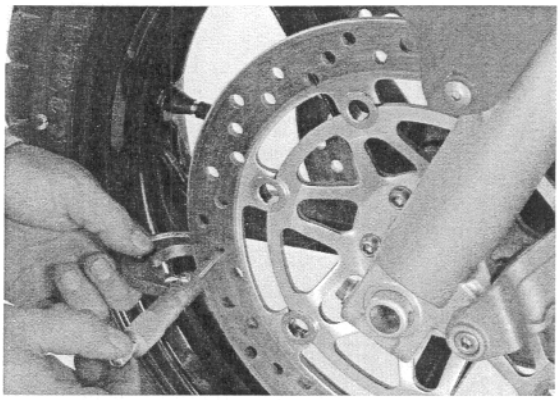

Measure the brake disc warpage with a dial indicator.

SERVICE LIMITS:
FRONT: 0.20 mm (0.008 in)
REAR: 0.30 mm (0.012 in)

Check the wheel bearings for excessive play, if the warpage exceeds the service limit.
Replace the brake disc if the wheel bearings are normal.

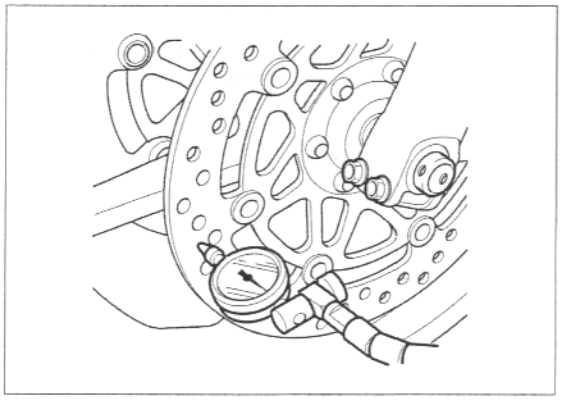

FRONT MASTER CYLINDER

REMOVAL

Drain the front hydraulic system (page 15-7).

Disconnect the brake light switch wire connectors.

Avoid spilling fluid on painted, plastic, or rubber parts. Place a shop towel over these parts whenever the system is serviced.

Remove the brake hose oil bolt, sealing washers and brake hose eyelet.

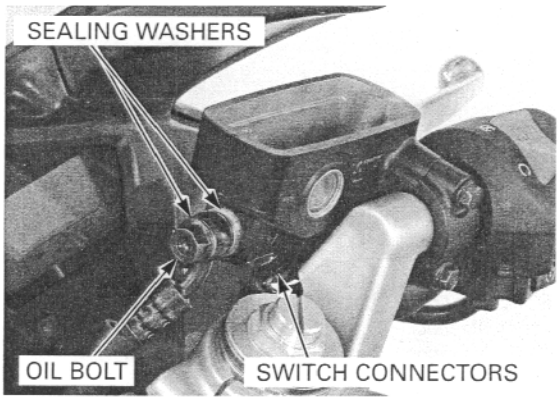

Remove the bolts from the master cylinder holder and remove the master cylinder assembly.

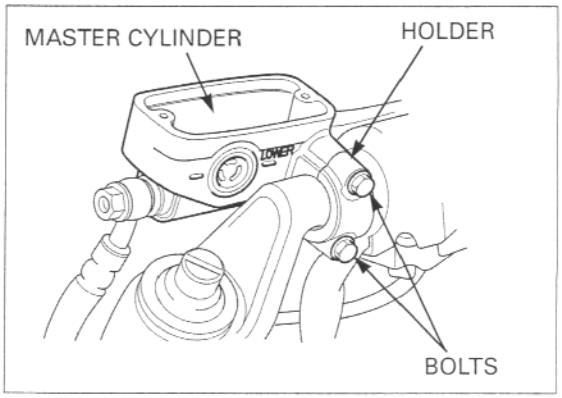

DISASSEMBLY

Remove the pivot bolt/nut and brake lever assembly.

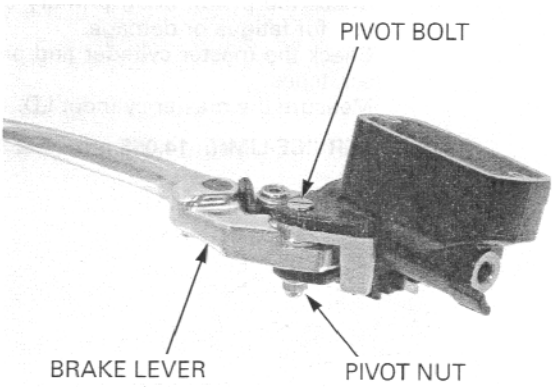

Remove the screw and brake light switch.

Remove the boot.

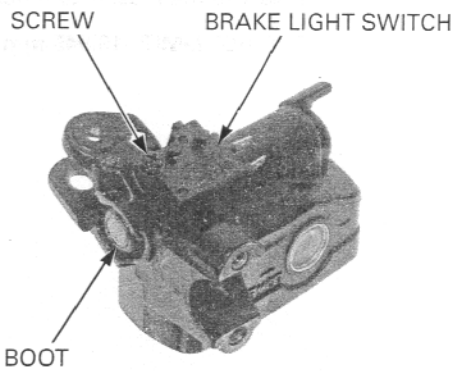

Remove the snap ring from the master cylinder body using the special tool as shown.

TOOL:

Snap ring pliers	**07914-SA50001**

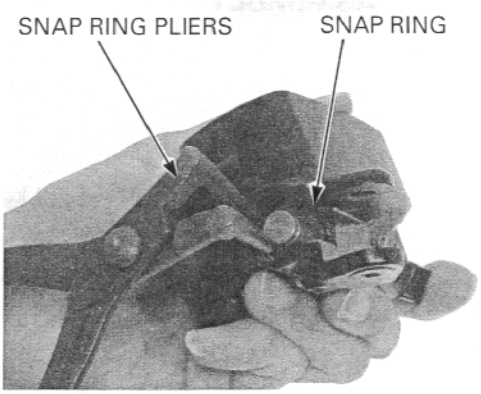

Remove the master piston, primary cup and spring.

Clean the inside of the cylinder and reservoir with brake fluid.

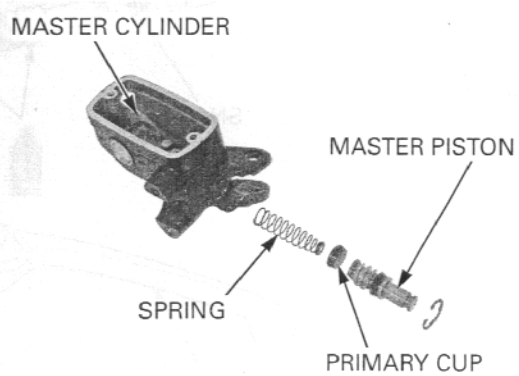

INSPECTION

Check the piston boot, primary cup and secondary cup for fatigue or damage.
Check the master cylinder and piston for abnormal scratches.
Measure the master cylinder I.D.

SERVICE LIMIT: 14.055 mm (0.5533 in)

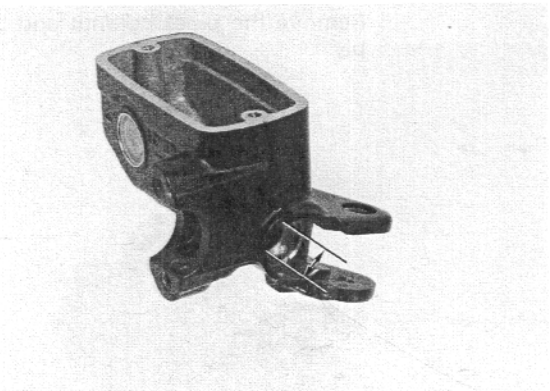

Measure the master cylinder piston O.D.

SERVICE LIMIT: 13.945 mm (0.5490 in)

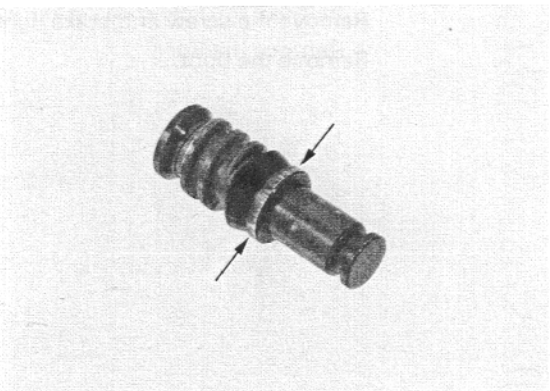

ASSEMBLY

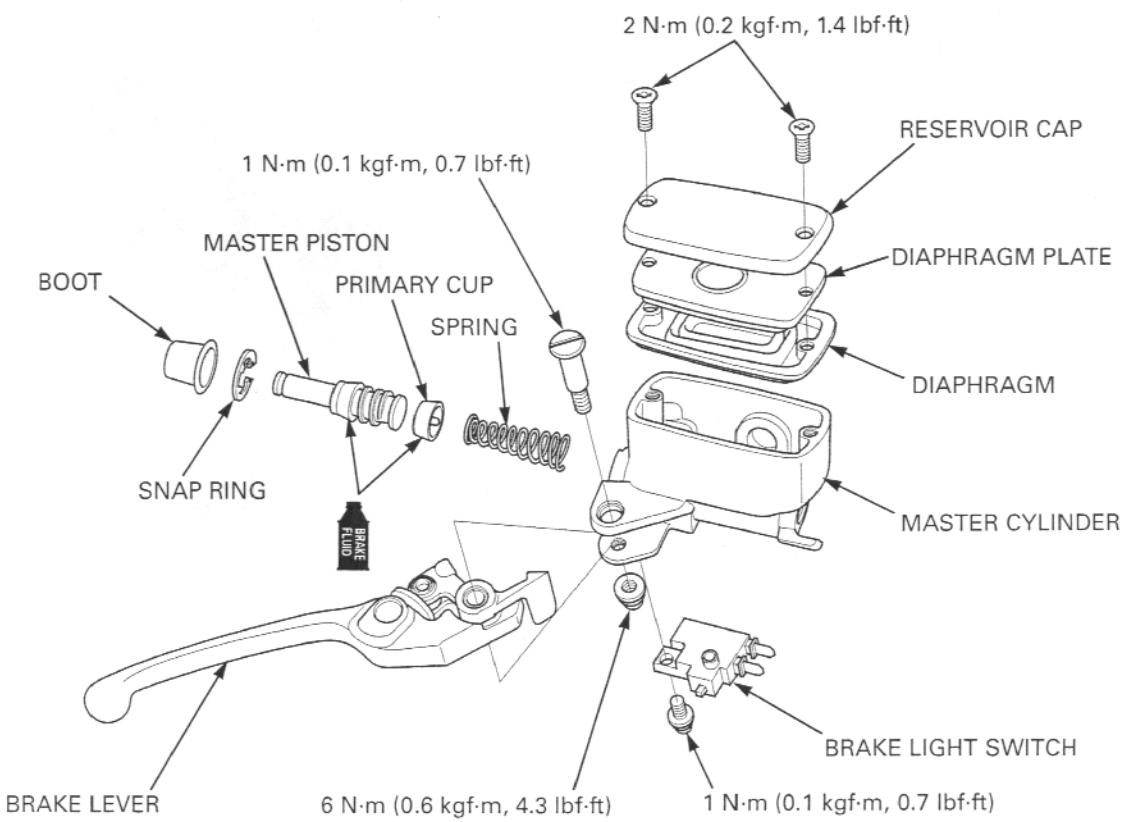

Keep the piston, cups, spring, snap ring and boot as a set; do not substitute individual parts.

Coat all parts with clean brake fluid before assembly.

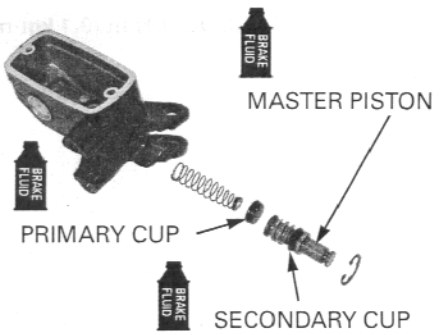

When installing the cups, do not allow the lips to turn inside out.

Dip the piston in brake fluid.
Install the primary cup onto the tip of the spring.
Install the spring/primary cup into the master cylinder.
Install the piston assembly into the master cylinder.

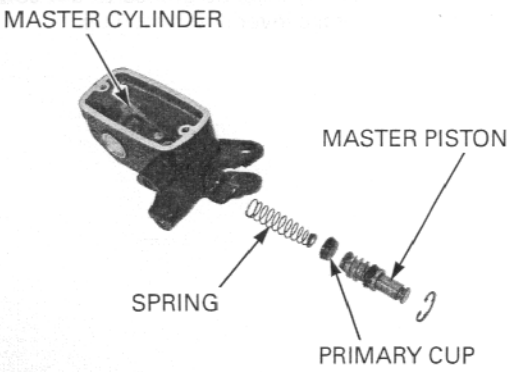

Be certain the snap ring is firmly seated in the groove.

Install the snap ring using the special tool.

TOOL:
Snap ring pliers **07914-SA50001**

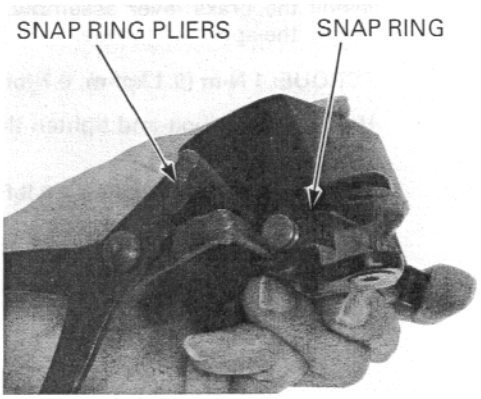

Apply silicone grease to the inside of the boot and master piston tip.
Install the boot.

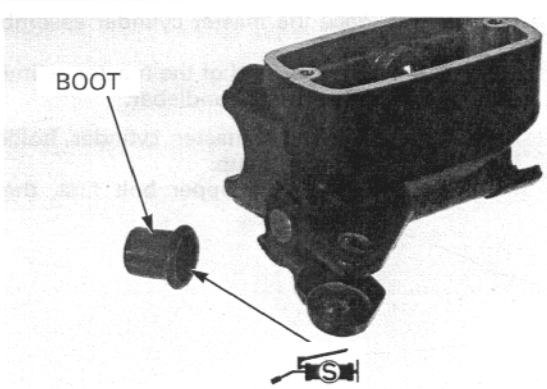

Install the brake light switch and tighten the screw to the specified torque.

TORQUE: 1 N·m (0.1 kgf·m, 0.7 lbf·ft)

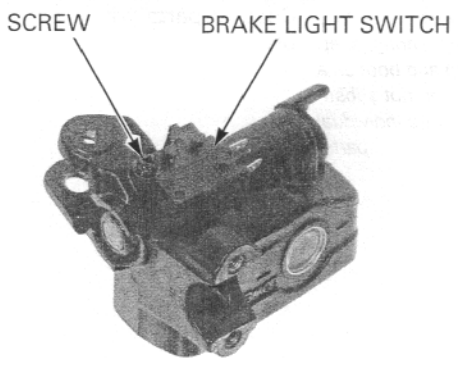

Apply silicone grease to the contact surfaces of the brake lever and piston tip.

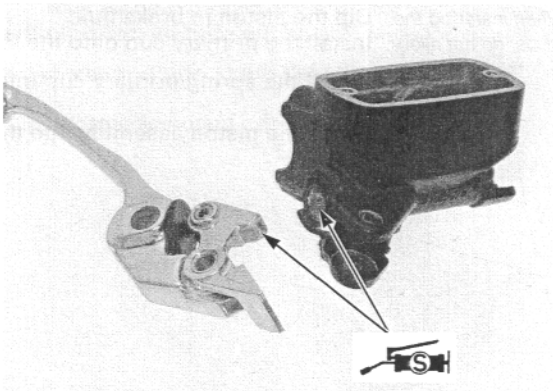

Install the brake lever assembly, tighten the pivot bolt to the specified torque.

TORQUE: 1 N·m (0.1 kgf·m, 0.7 lbf·ft)

Hold the pivot bolt and tighten the pivot nut to the specified torque.

TORQUE: 6 N·m (0.6 kgf·m, 4.3 lbf·ft)

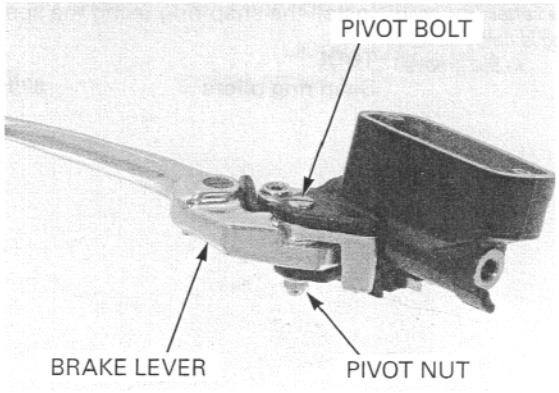

Place the master cylinder assembly on the handlebar.
Align the end of the master cylinder with the punch mark on the handlebar.

Install the master cylinder holder with the "UP" mark facing up.
Tighten the upper bolt first, then the lower bolt securely.

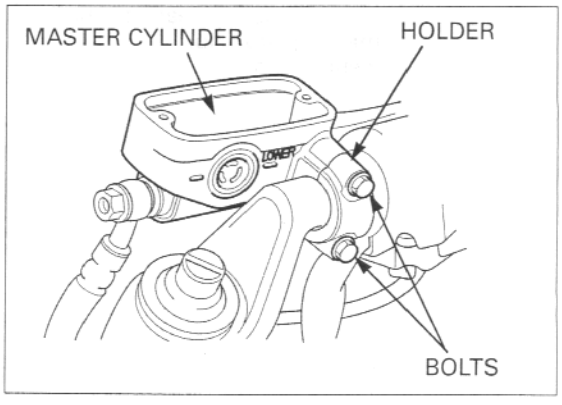

Install the brake hose eyelet with the oil bolt and new sealing washers.
Push the eyelet joint against the stopper, then tighten the oil bolt to the specified torque.

TORQUE: 34 N·m (3.5 kgf·m, 25 lbf·ft)

Connect the brake light switch wire connectors.

Fill and bleed the brake system (page 15-7).

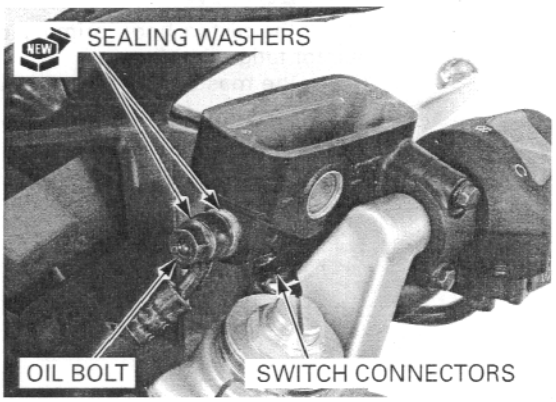

SECONDARY MASTER CYLINDER

REMOVAL

Drain the pedal brake hydraulic system (page 15-7).
Remove the left front brake caliper (page 15-35).

Avoid spilling fluid on painted, plastic, or rubber parts. Place a shop towel over these parts whenever the system is serviced.

Remove the brake hose oil bolts, sealing washers, brake hose eyelet and left caliper bracket/secondary master cylinder assembly.

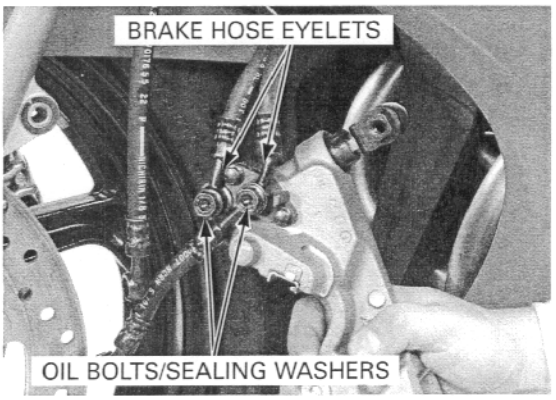

Remove the boot.

Remove the snap ring from the master cylinder body using the special tool as shown.

TOOL:
Snap ring pliers **07914-SA50001**

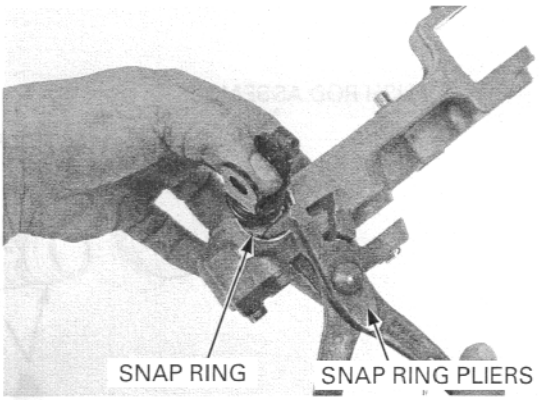

Do not disassemble the secondary master cylinder push rod or the correct brake performance will not be obtained.

Remove the push rod assembly, master piston and spring.

Clean the inside of the cylinder and reservoir with brake fluid.

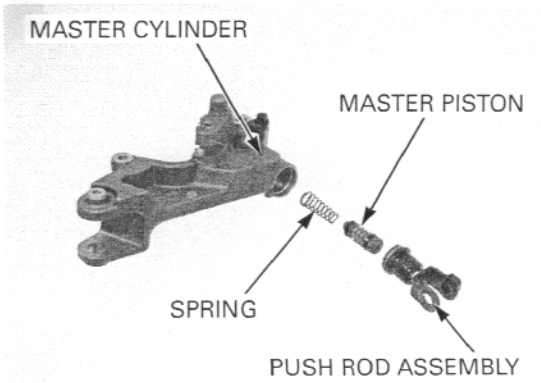

INSPECTION

Check the piston boot, primary cup and secondary cup for fatigue or damage.
Check the master cylinder and piston for abnormal scratches.
Measure the master cylinder I.D.

SERVICE LIMIT: 12.76 mm (0.502 in)

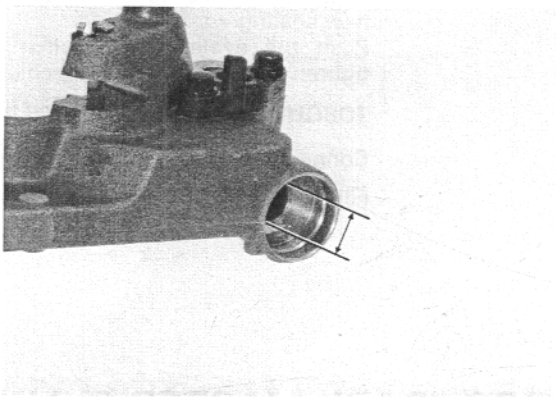

Measure the master cylinder piston O.D.

SERVICE LIMIT: 12.65 mm (0.498 in)

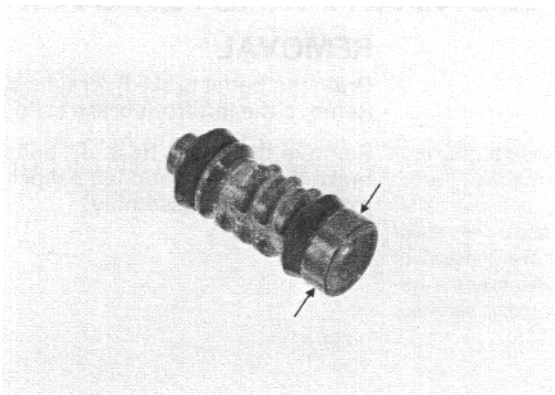

ASSEMBLY

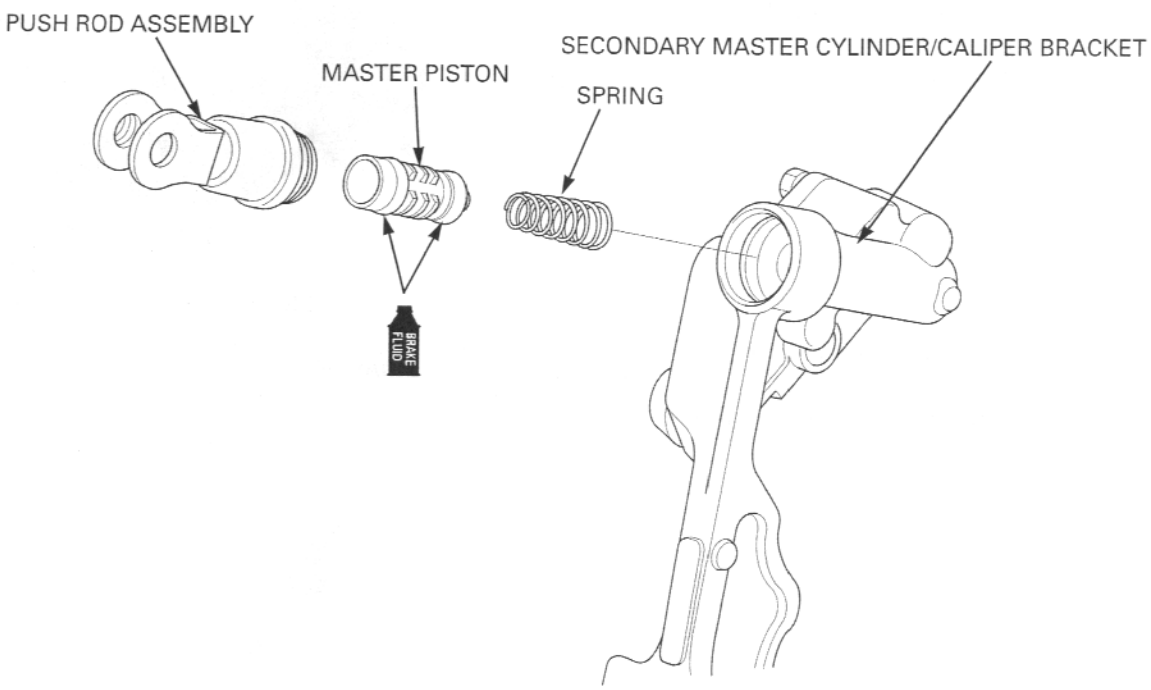

Keep the piston, cups, spring, snap ring and boot as a set; do not substitute individual parts.

Coat all parts with clean brake fluid before assembly.

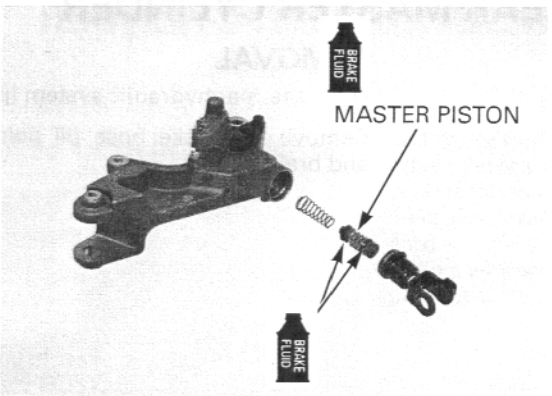

When installing the cups, do not allow the lips to turn inside out.

Dip the piston in brake fluid.
Install the spring into the piston.
Install the piston assembly into the master cylinder.

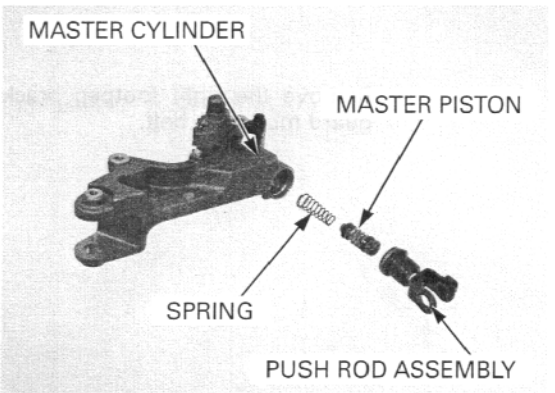

Be certain the snap ring is firmly seated in the groove.

Install the snap ring using the special tool.

TOOL:
Snap ring pliers **07914-SA50001**

Install the boot.

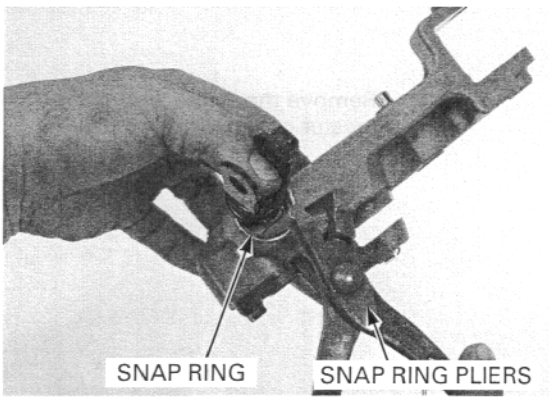

Install the brake hose eyelets with the oil bolts and new sealing washers.
Tighten the oil bolts to the specified torque.

TORQUE: 34 N·m (3.5 kgf·m, 25 lbf·ft)

Install the left front brake caliper (page 15-41).

Fill and bleed the air from lever and pedal brake line (page 15-7).

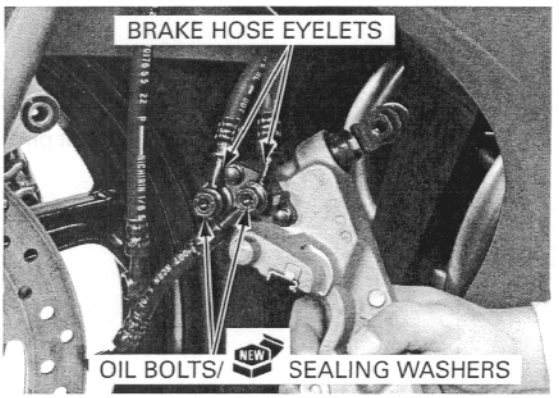

REAR MASTER CYLINDER

REMOVAL

Drain the rear hydraulic system (page 15-7).

Avoid spilling fluid on painted, plastic, or rubber parts. Place a shop towel over these parts whenever the system is serviced.

Remove the brake hose oil bolt, sealing washers and brake hose.

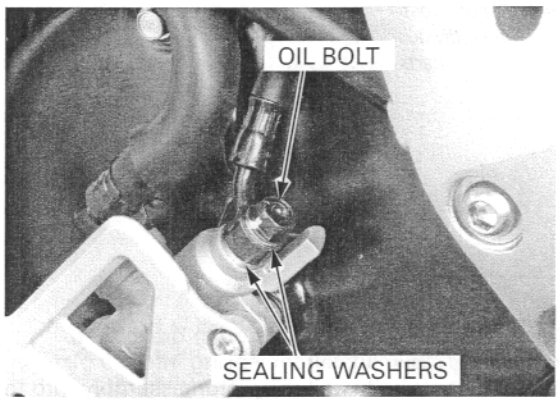

Remove the right footpeg bracket bolts and heat guard mounting bolt.

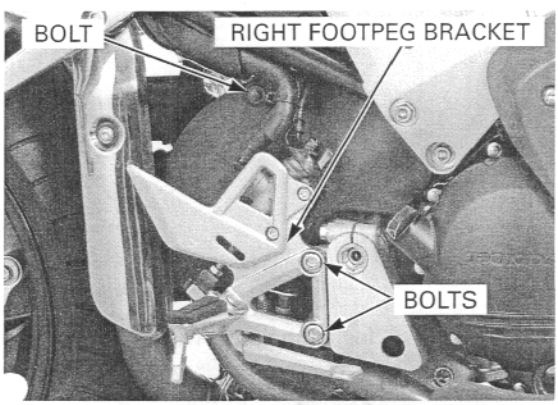

Remove the screw and reservoir hose joint from the master cylinder.

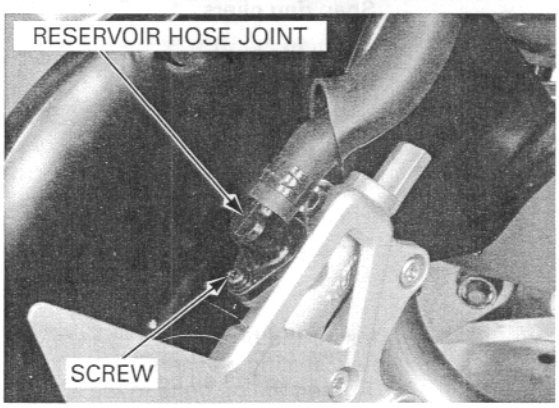

Remove and discard the brake pedal joint cotter pin.

Remove the brake pedal joint pin.

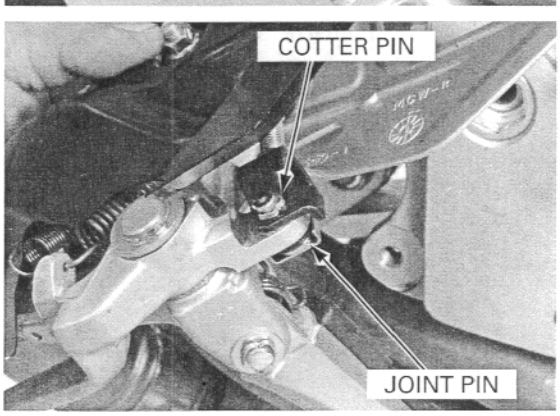

Remove the mounting bolts, nuts, collars and rear master cylinder.

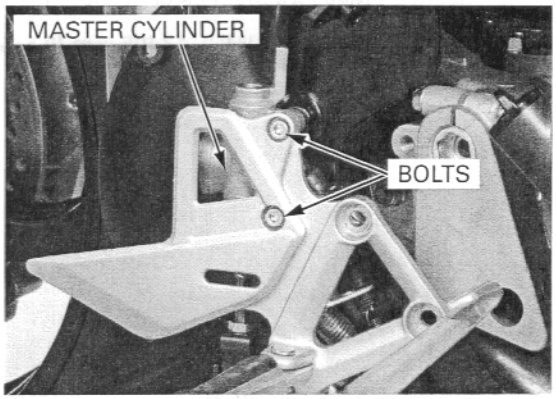

DISASSEMBLY

Remove the boot.

Remove the snap ring from the master cylinder body using the special tool as shown.

TOOL:
Snap ring pliers **07914-SA50001**

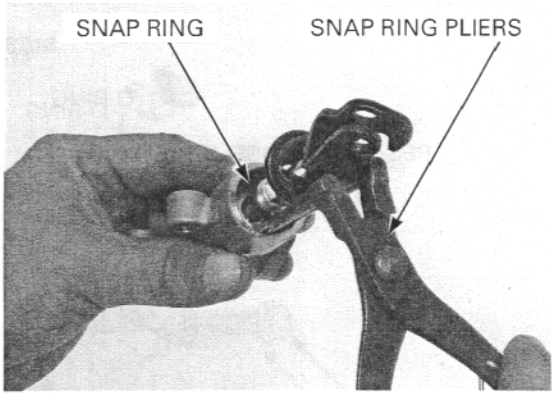

Remove the push rod/master piston, primary cup and spring.
Clean the inside of the cylinder with brake fluid.

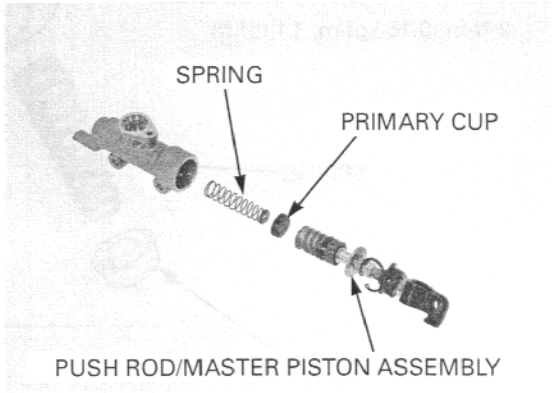

INSPECTION

Check the piston boot, primary cup and secondary cup for fatigue or damage.
Check the master cylinder and piston for abnormal scratches.
Measure the master cylinder I.D.

SERVICE LIMIT: 17.515 mm (0.6896 in)

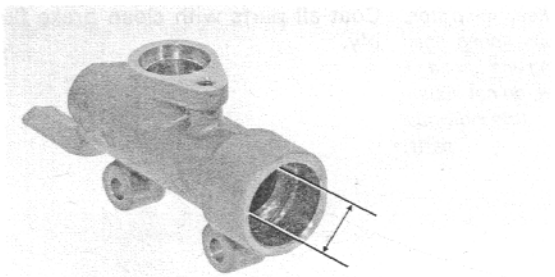

Measure the master cylinder piston O.D.

SERVICE LIMIT: 17.405 mm (0.6852 in)

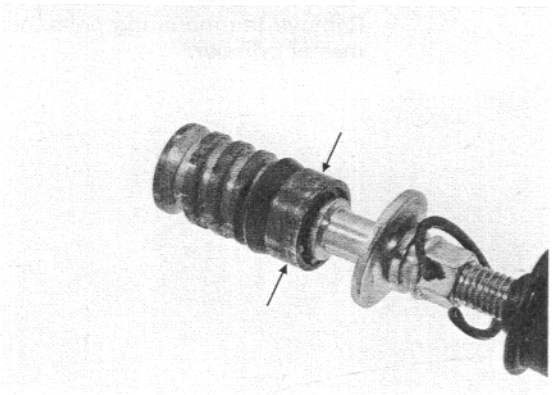

ASSEMBLY

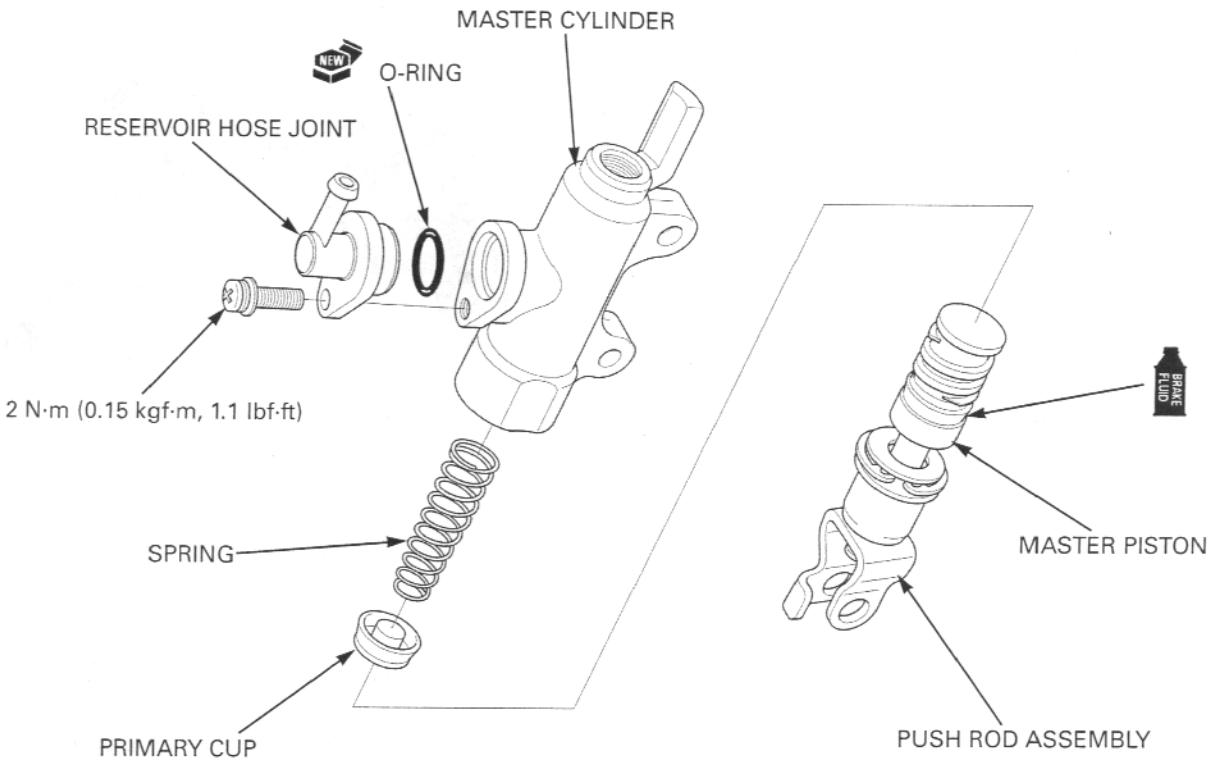

Keep the piston, cups, spring, snap ring and boot as a set; do not substitute individual parts.

Coat all parts with clean brake fluid before assembly.

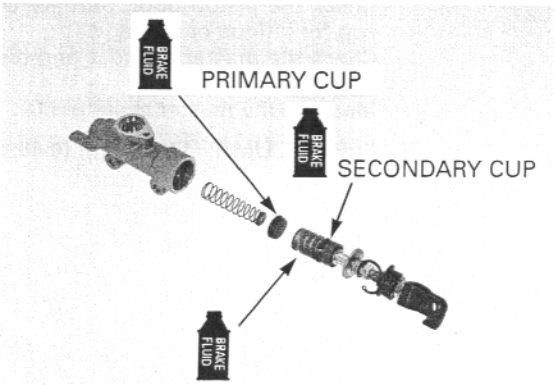

When installing the cups, do not allow the lips to turn inside out.

Dip the piston in brake fluid.
Install the spring to the primary cup.
Install the spring/primary cup and master piston/push rod assembly.

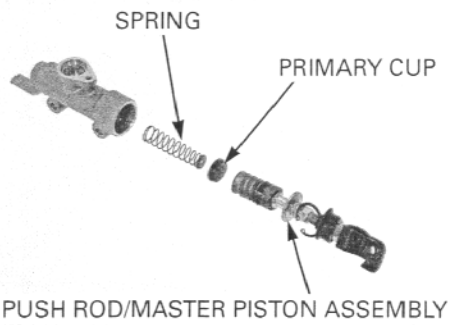

Be certain the snap ring is firmly seated in the groove.

Install the snap ring using the special tool.

TOOL:
Snap ring pliers **07914-SA50001**

Install the boot.

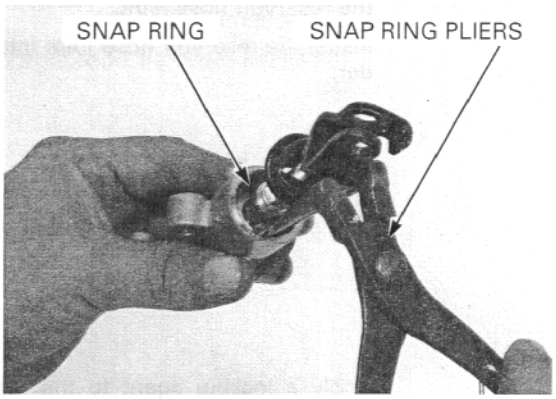

If the push rod is disassembled, adjust the push rod length as shown.
After adjustment, tighten the lock nut to the specified torque.

TORQUE: 18 N·m (1.8 kgf·m, 13 lbf·ft)

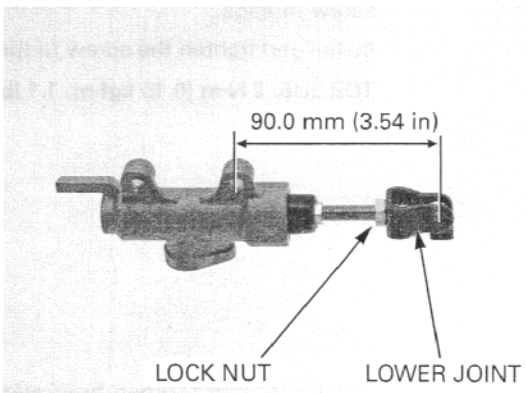

INSTALLATION

Place the master cylinder between the muffler heat guard and right footpeg bracket, install the master cylinder mounting bolts, collars and nuts.

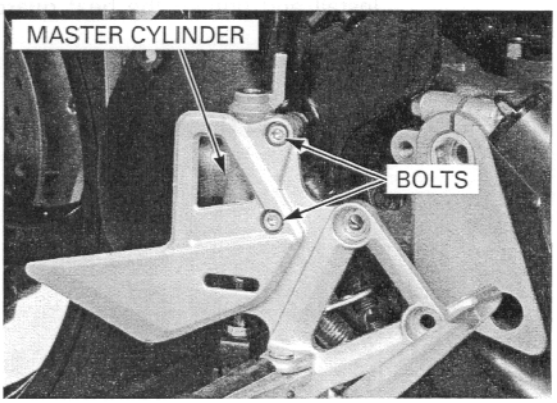

Install the brake pedal joint pin.

Secure the joint pin using a new cotter pin.

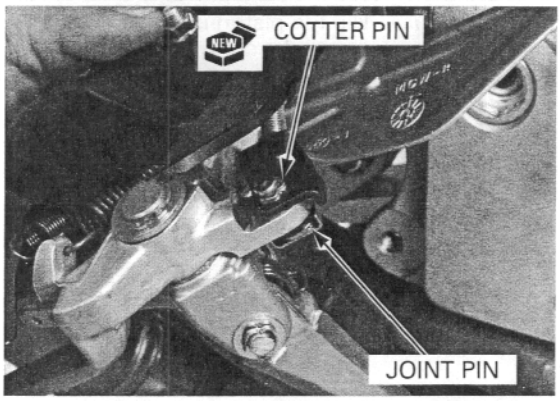

Apply brake fluid to a new O-ring and install it onto the reservoir hose joint.

Install the reservoir hose joint into the master cylinder.

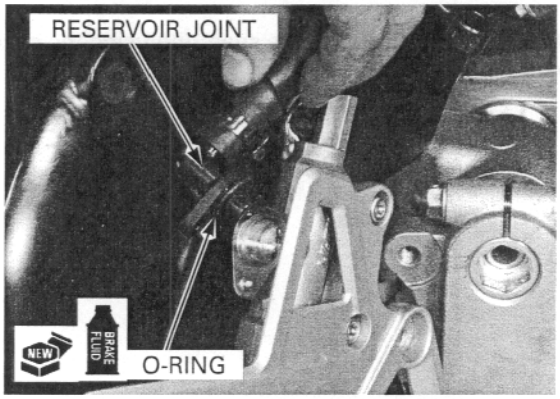

Apply a locking agent to the reservoir hose joint screw threads.

Install and tighten the screw to the specified torque.

TORQUE: 2 N·m (0.15 kgf·m, 1.1 lbf·ft)

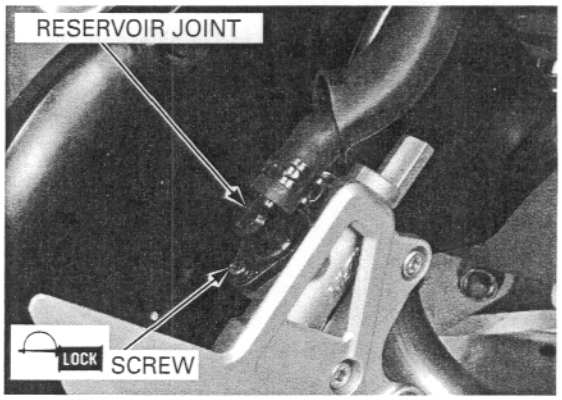

Install the right footpeg bracket/muffler heat guard assembly.
Install and tighten the heat guard plate mounting bolt.
Install and tighten the right footpeg bracket bolts to the specified torque.

TORQUE: 32 N·m (3.3 kgf·m, 24 lbf·ft)

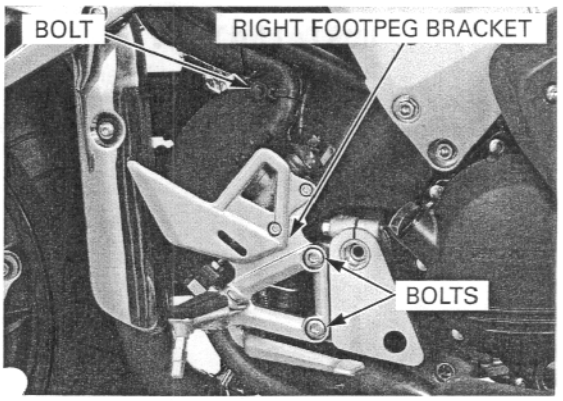

Install the brake hose with the oil bolt and new sealing washers.
Push the eyelet joint against the stopper, then tighten the oil bolt to the specified torque.

TORQUE: 34 N·m (3.5 kgf·m, 25 lbf·ft)

Fill and bleed the brake system (page 15-7).

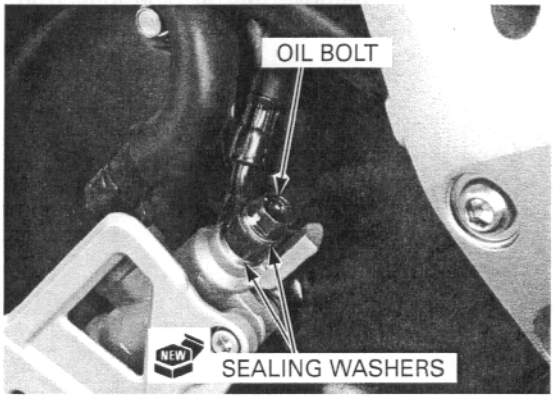

PROPORTIONAL CONTROL VALVE

REAR PROPORTIONAL CONTROL VALVE REMOVAL/INSTALLATION

Drain the pedal and servo line hydraulic system (page 15-7).
Remove the rear fender (page 2-17).

Remove the heat guard mounting bolt.
Remove the right footpeg holder mounting bolts and right footpeg holder assembly.

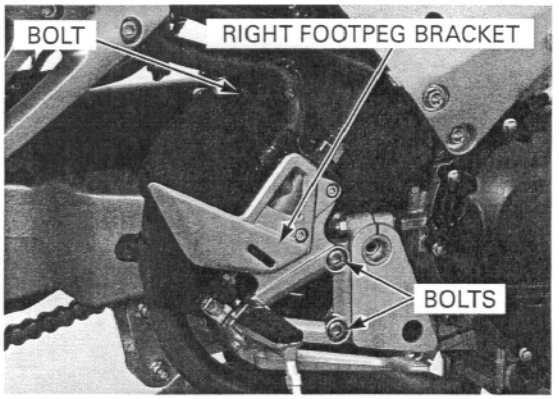

Disconnect the rear brake light switch and rear wheel speed sensor wire connectors.

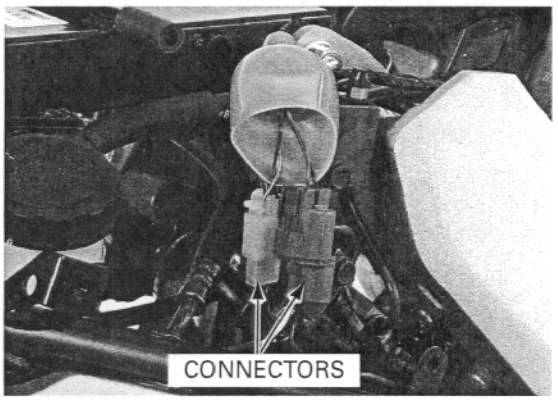

Remove the oil pipe joint from the hose joint.

Remove the brake oil hose joint mounting bolt.

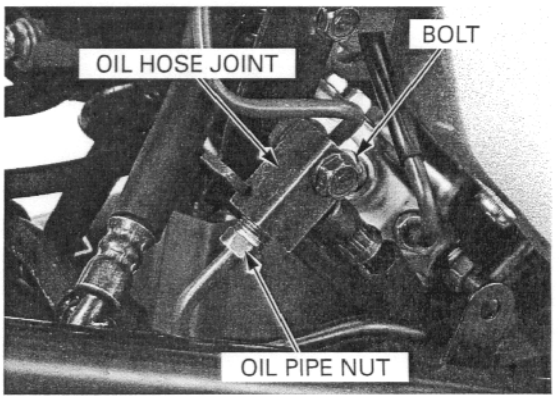

Remove the oil pipe joint from the servo proportional control valve.

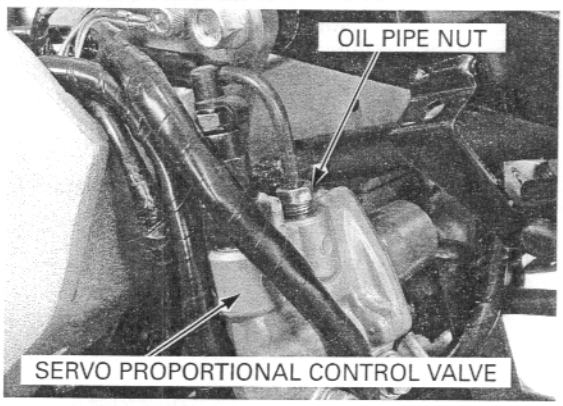

Remove the oil pipe joint from the rear proportional control valve.

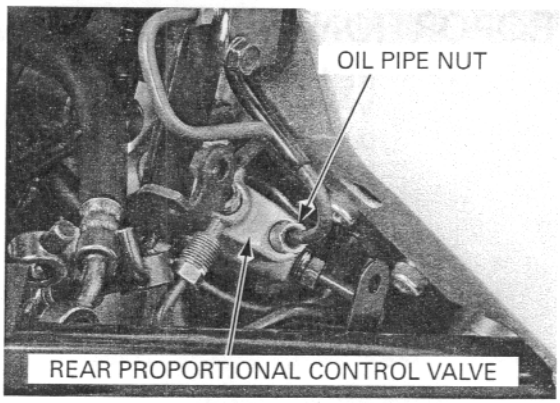

Remove the rear brake hose guide bolt.

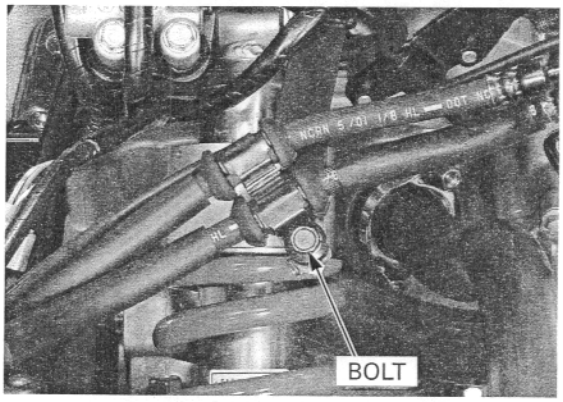

Remove the four socket bolts and rear proportional control valve bracket assembly.

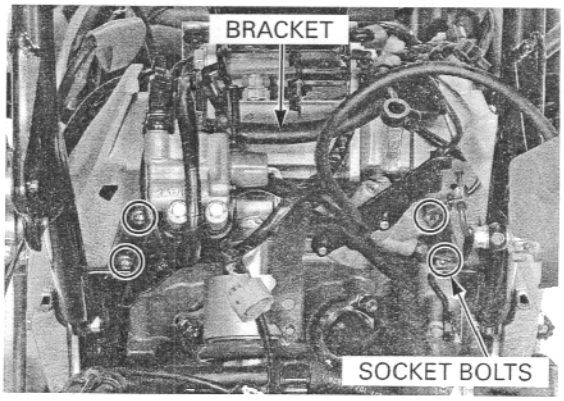

Remove the oil pipe joint nuts.

Remove the mounting bolts and rear proportional control valve.

Installation is in the reverse order of removal.

Fill and bleed the brake system (page 15-7).

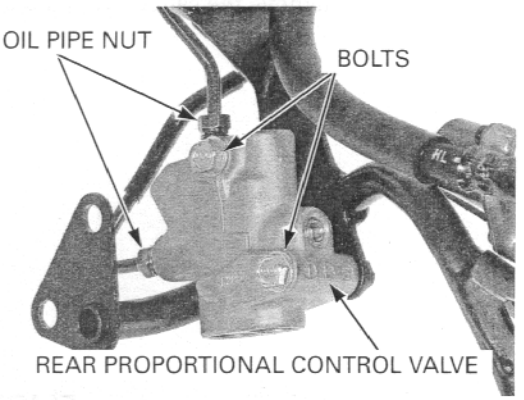

SERVO PROPORTIONAL CONTROL VALVE REMOVAL/INSTALLATION

Drain the pedal and servo line hydraulic system (page 15-7).
Remove the rear fender (page 2-17).

Remove the oil bolt, sealing washers and brake hose eyelet from the servo proportional control valve.
Loosen the oil pipe nut and remove the oil pipe.

Remove the two mounting bolts and servo proportional control valve.

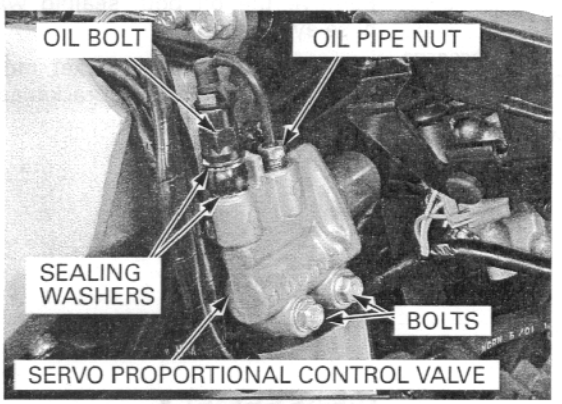

Tighten the oil bolt while pushing the brake hose eyelet joint against the stopper on the servo proportional control valve.

Installation is in the reverse order of removal.

Fill and bleed the brake system (page 15-7).

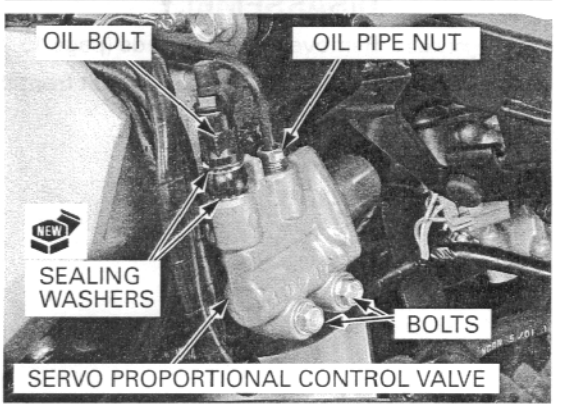

FRONT BRAKE CALIPER

LEFT CALIPER REMOVAL

Drain the lever and pedal brake line hydraulic system (page 15-7).

Avoid spilling fluid on painted, plastic, or rubber parts. Place a shop towel over these parts whenever the system is serviced.

Remove the oil bolts, sealing washers and brake hose eyelet joints.
Remove the secondary master cylinder joint bolt and caliper pivot bolt.

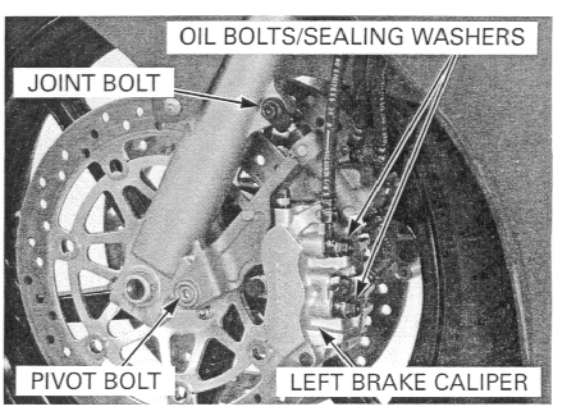

Remove the caliper from the bracket.

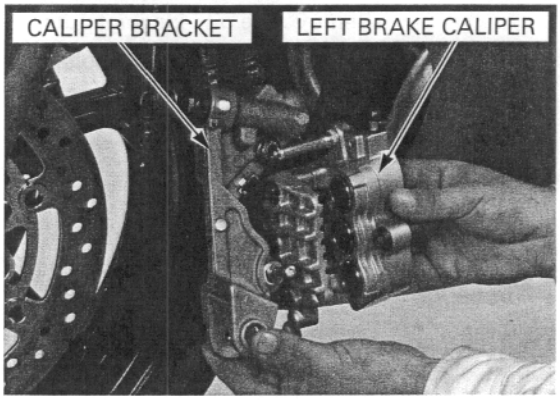

RIGHT CALIPER REMOVAL

Avoid spilling fluid on painted, plastic, or rubber parts. Place a shop towel over these parts whenever the system is serviced.

Remove the oil bolt, sealing washers and brake hose eyelet joint.

Remove the caliper bracket mounting bolts and then remove the caliper/bracket assembly.

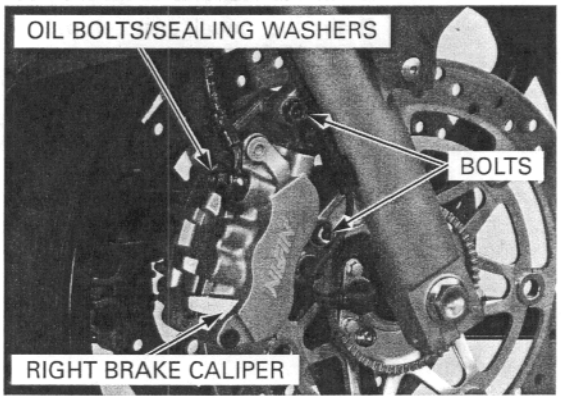

DISASSEMBLY

Right side: Remove the brake pads (page 15-17).

Remove the caliper bracket from the caliper body.

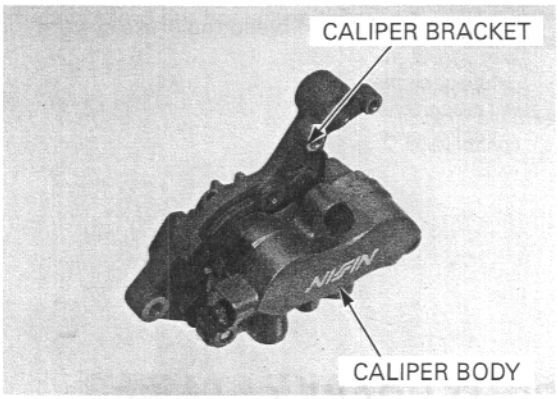

Remove the brake pad spring from the caliper body. Remove the brake pad retainer from the caliper bracket.

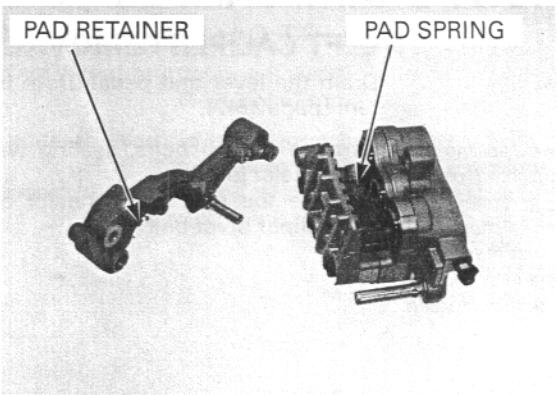

Remove the bolts and caliper body B

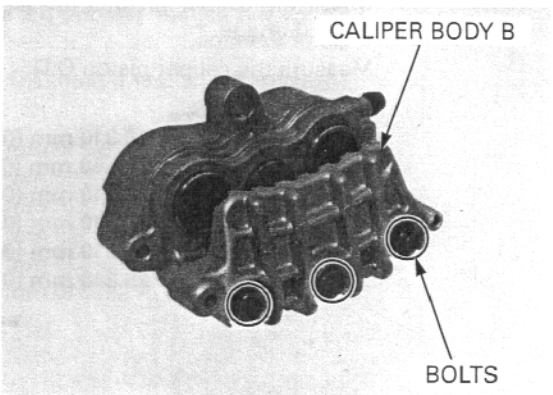

Place the piece of wood sheet under the caliper pistons.

Mark the pistons to ensure correct reassembly.

Apply small squirts of air pressure to the fluid inlet to remove the pistons.

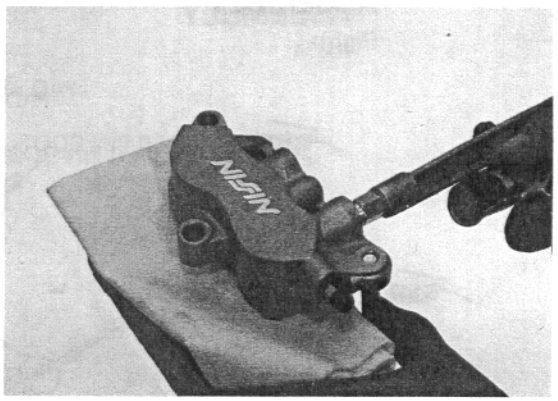

Be careful not to damage the piston sliding surface.

Push the dust seals and piston seals in and lift them out.

Clean the seal grooves with clean brake fluid.

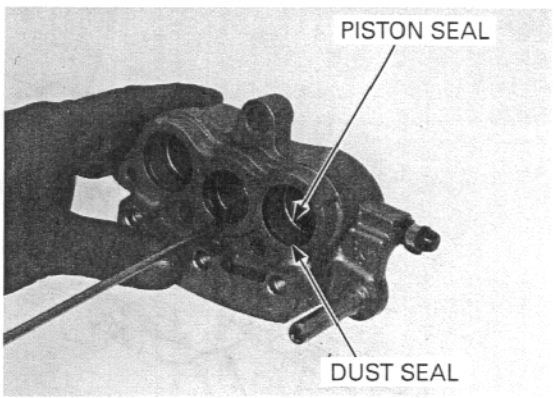

INSPECTION

Check the caliper cylinder for scoring or other damage.

Measure the caliper cylinder I.D.

SERVICE LIMITS:

Right:	**Upper:**	**25.460 mm (1.0024 in)**
	Middle:	**22.710 mm (0.8941 in)**
	Lower:	**25.460 mm (1.0024 in)**
Left:	**Upper:**	**25.460 mm (1.0024 in)**
	Middle:	**25.460 mm (1.0024 in)**
	Lower:	**25.460 mm (1.0024 in)**

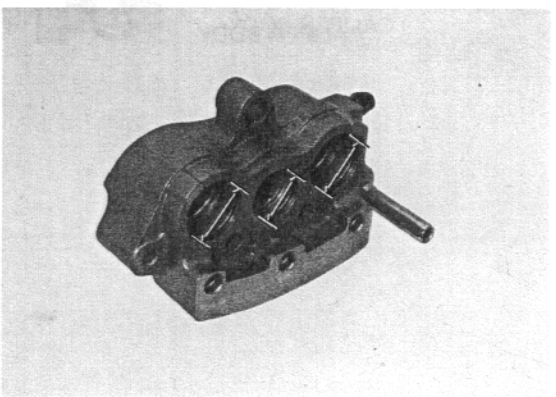

Check the caliper pistons for scratches, scoring or other damage.

Measure the caliper piston O.D.

SERVICE LIMITS:

Right:	**Upper:**	**25.310 mm (0.9965 in)**
	Middle:	**22.560 mm (0.8882 in)**
	Lower:	**25.310 mm (0.9965 in)**
Left:	**Upper:**	**25.310 mm (0.9965 in)**
	Middle:	**25.310 mm (0.9965 in)**
	Lower:	**25.310 mm (0.9965 in)**

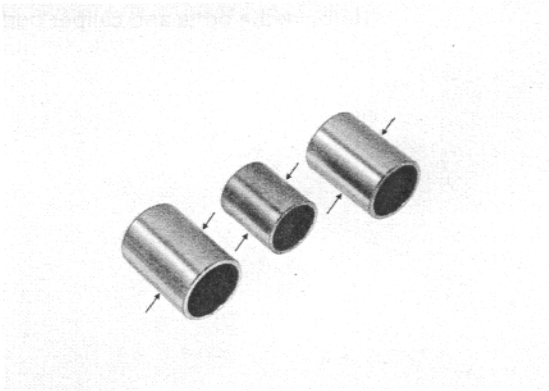

ASSEMBLY

Right:

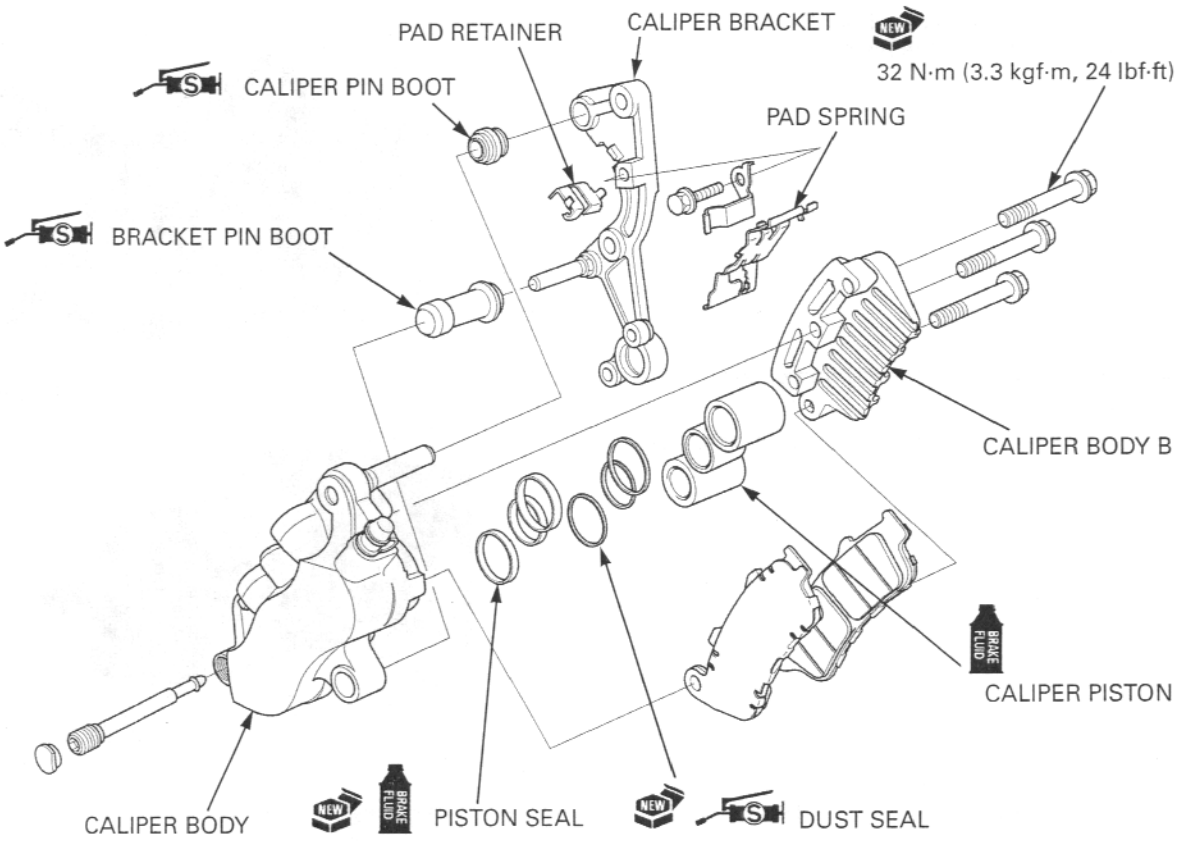

Left:

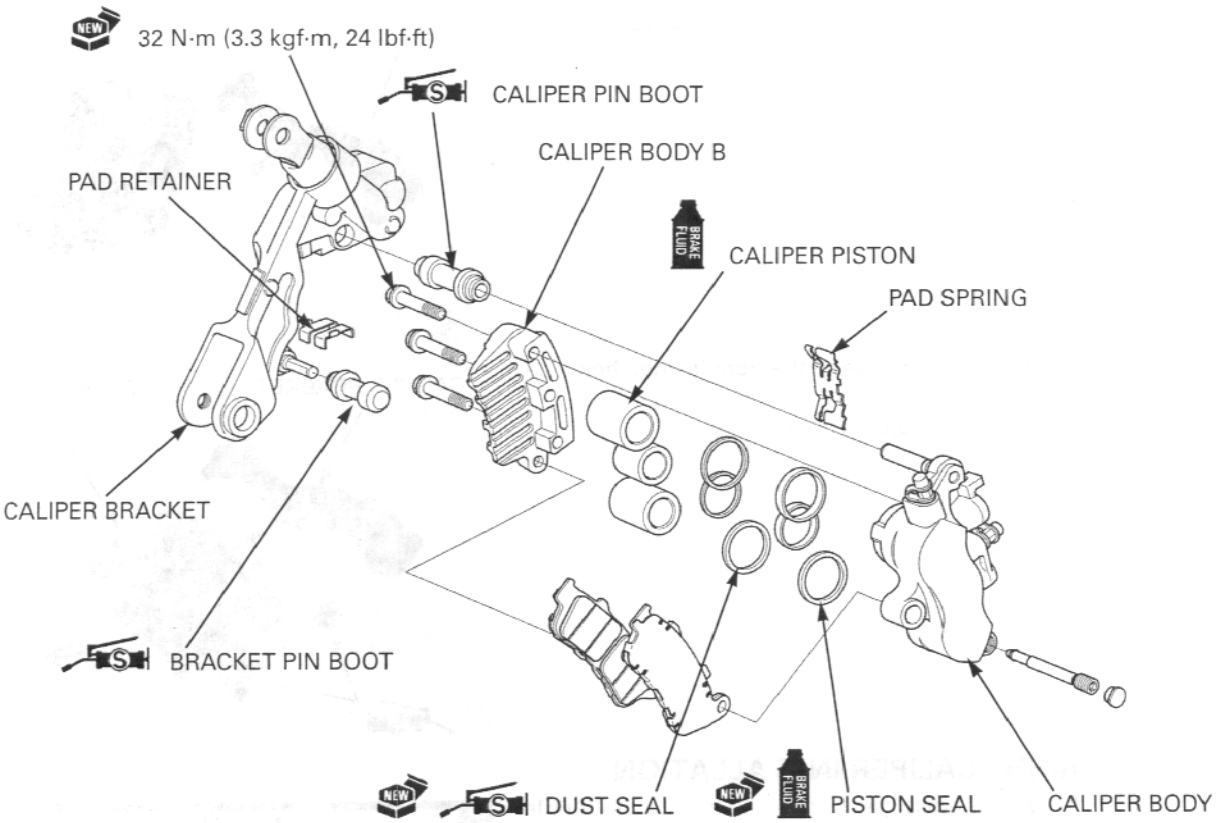

Coat the new piston seals with clean brake fluid.
Coat the new dust seals with silicone grease.

Install the piston and dust seal into the groove of the caliper body.

Coat the caliper pistons with clean brake fluid and install them into the caliper cylinder with their open ends toward the pad.

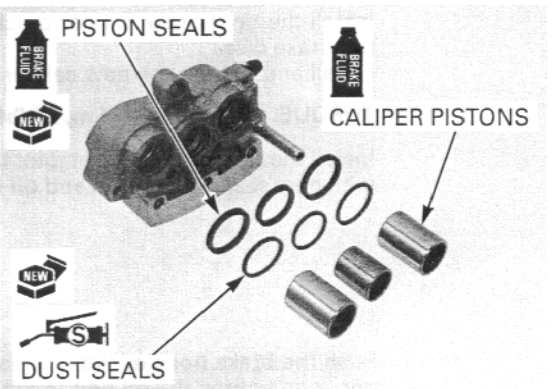

Install the caliper body B and tighten the new bolts to the specified torque.

TORQUE: 32 N·m (3.3 kgf·m, 24 lbf·ft)

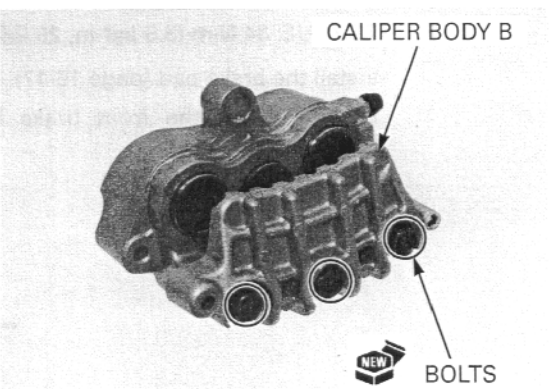

Install the brake pad retainer onto the caliper bracket.

Note the installation direction of the pad spring.

Install the pad spring into the caliper body.

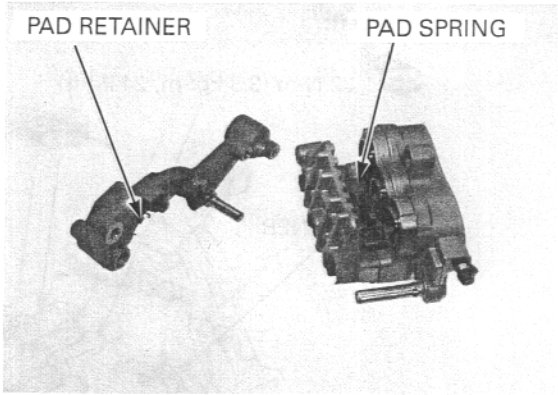

Apply silicone grease to the boot inside, then install them.

Assemble the caliper and bracket.

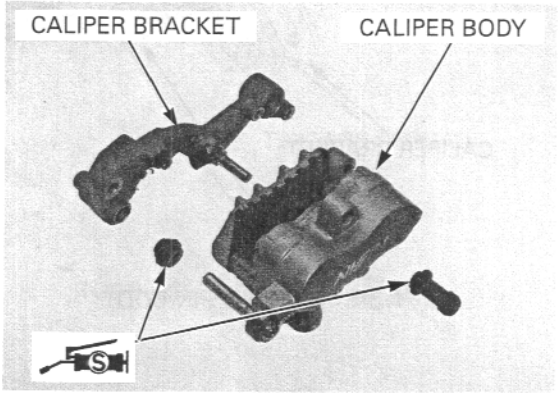

RIGHT CALIPER INSTALLATION

Install the brake pads and caliper onto the fork leg (page 15-17).

Install the right brake caliper/bracket assembly over the brake disc.
Install and tighten the new caliper mounting bolts.

TORQUE: 31 N·m (3.2 kgf·m, 23 lbf·ft)

Install the brake hose eyelet joint to the caliper body with new sealing washers and oil bolt.

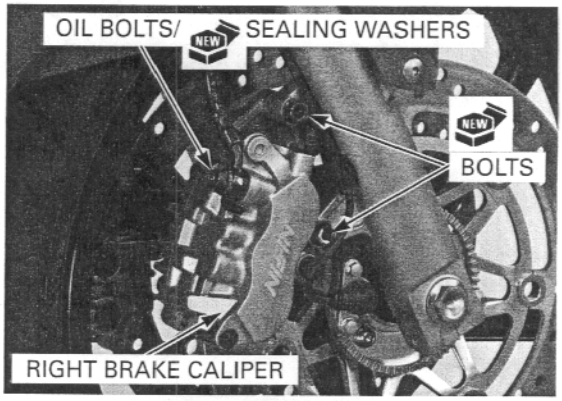

Push the brake hose eyelet stopper against the caliper, then tighten the oil bolt to the specified torque.

TORQUE: 34 N·m (3.5 kgf·m, 25 lbf·ft)

Install the brake pad (page 15-17).

Fill and bleed the front brake hydraulic system (page 15-7).

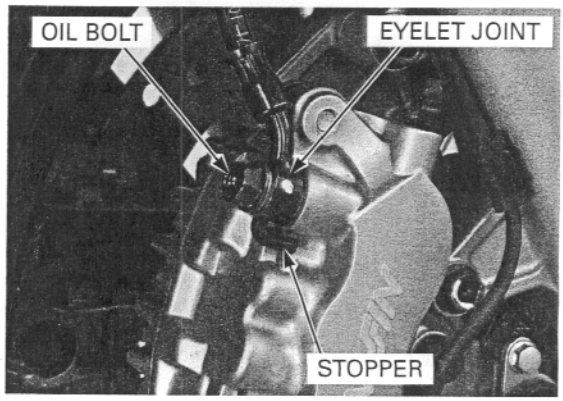

LEFT CALIPER INSTALLATION

Install the left brake caliper onto the bracket.

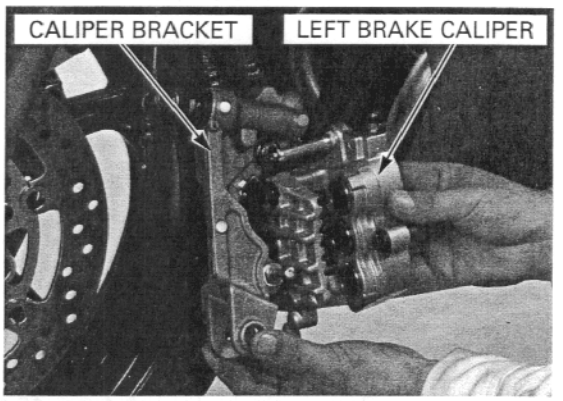

Install the left brake caliper/bracket assembly over the brake disc.
Install the new caliper pivot bolt and secondary master cylinder joint bolt.
Tighten the bolts to the specified torque.

TORQUE:
Pivot bolt: 31 N·m (3.2 kgf·m, 23 lbf·ft)
Joint bolt: 31 N·m (3.2 kgf·m, 23 lbf·ft)

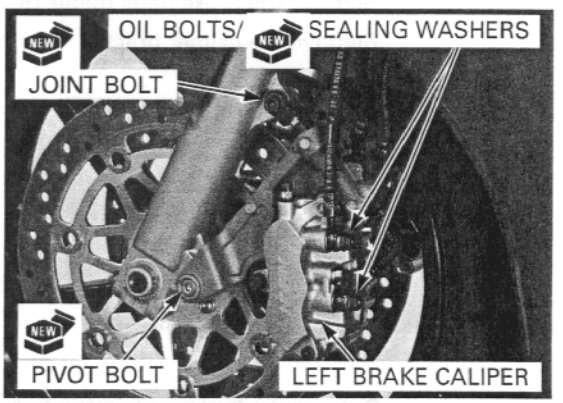

Install the brake hose eyelet joints to the caliper body with new sealing washers and oil bolts.

Push the brake hose eyelet to the stopper on the caliper, then tighten the oil bolt to the specified torque.

TORQUE: 34 N·m (3.5 kgf·m, 25 lbf·ft)

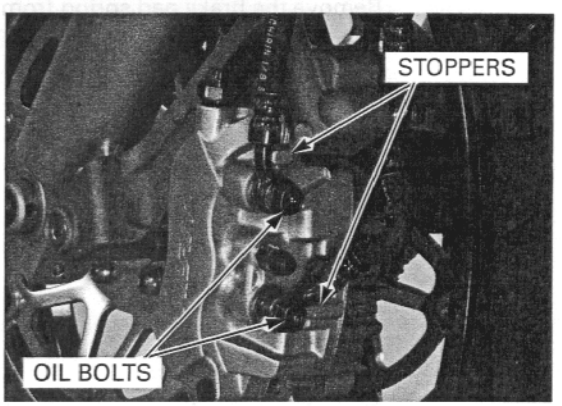

Install the brake pads (page 15-17).
Fill and bleed the front brake hydraulic system (page 15-7).

REAR BRAKE CALIPER

REMOVAL

Remove the rear wheel (page 14-5).
Drain the rear brake hydraulic system (page 15-7).

Avoid spilling fluid on painted, plastic, or rubber parts. Place a shop towel over these parts whenever the system is serviced.

Remove the oil bolts, sealing washers and brake hose eyelet joints.

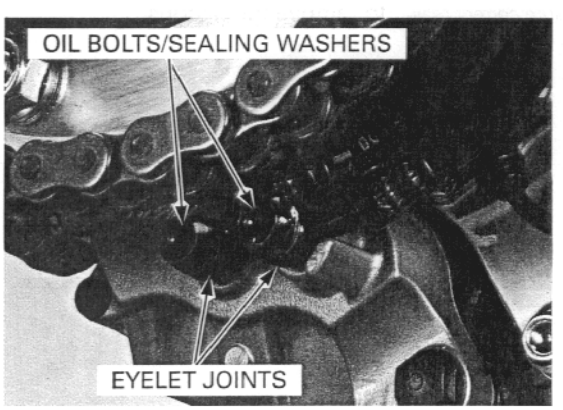

Remove the caliper mounting bolts and brake caliper/bracket assembly.

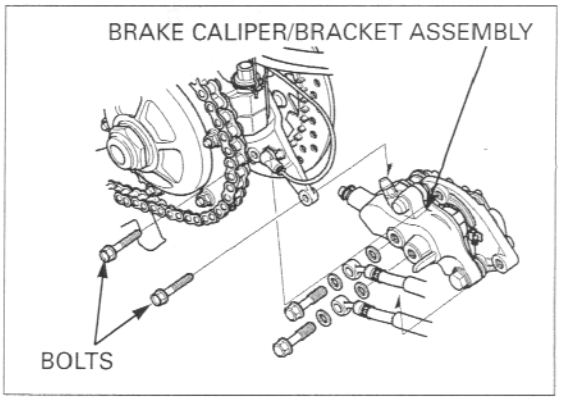

DISASSEMBLY

Remove the brake pads (page 15-17).

Remove the caliper bracket from the caliper body.

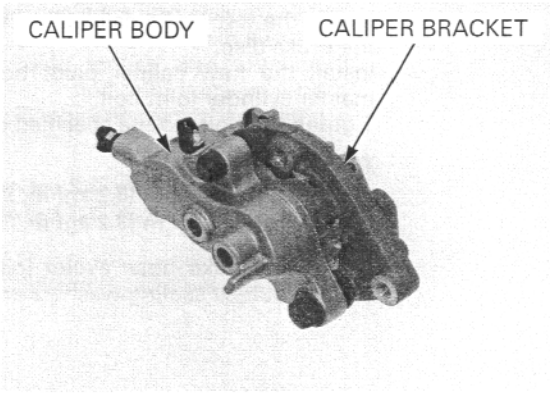

Remove the brake pad spring from the caliper body. Remove the brake pad retainer from the caliper bracket.

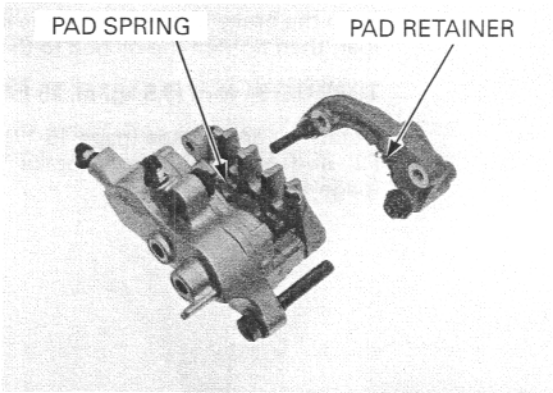

Place the piece of wood sheet under the caliper pistons.

Mark the pistons to ensure correct reassembly.

Apply small squirts of air pressure to the fluid inlet to remove the pistons.

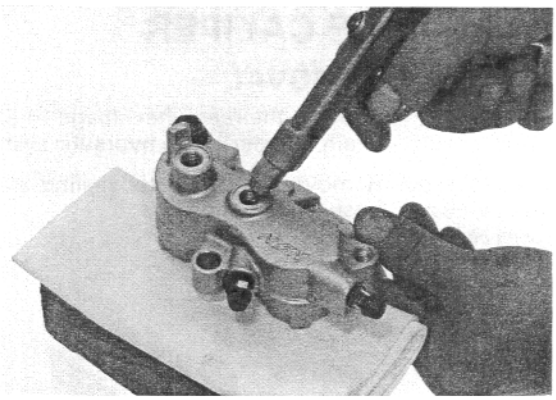

Be careful not to damage the piston sliding surface.

Push the dust seals and piston seals in and lift them out.

Clean the seal grooves with clean brake fluid.

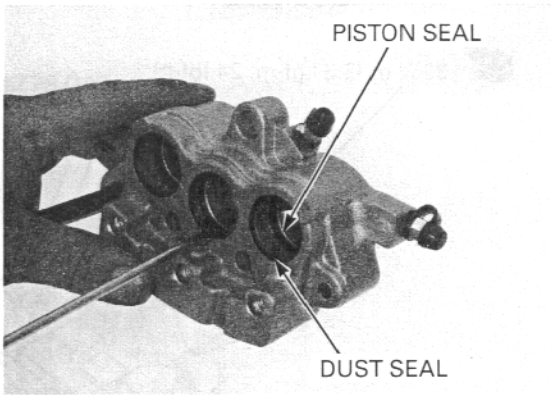

Remove the bolts and caliper body B

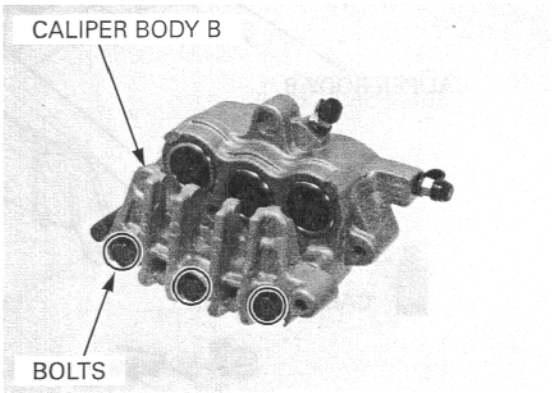

INSPECTION

Check the caliper cylinder for scoring or other damage.

Measure the caliper cylinder I.D.

SERVICE LIMITS:

Front:	**25.460 mm (1.0024 in)**
Center:	**25.460 mm (1.0024 in)**
Rear:	**25.460 mm (1.0024 in)**

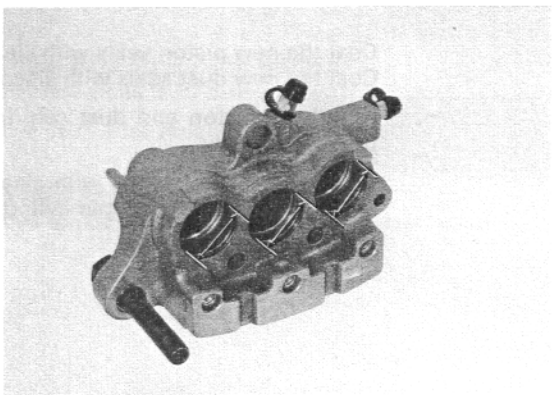

Check the caliper pistons for scratches, scoring or other damage.

Measure the caliper piston O.D.

SERVICE LIMITS:

Front:	**25.310 mm (0.9965 in)**
Center:	**25.310 mm (0.9965 in)**
Rear:	**25.310 mm (0.9965 in)**

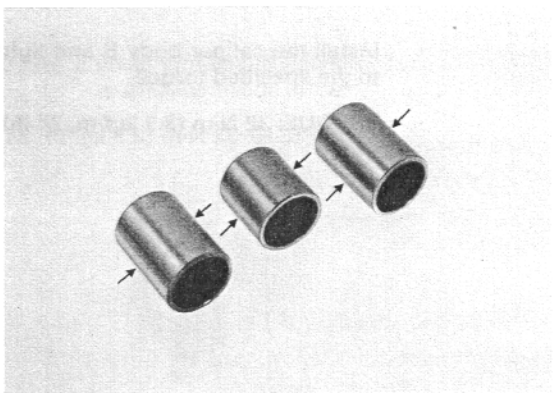

ASSEMBLY

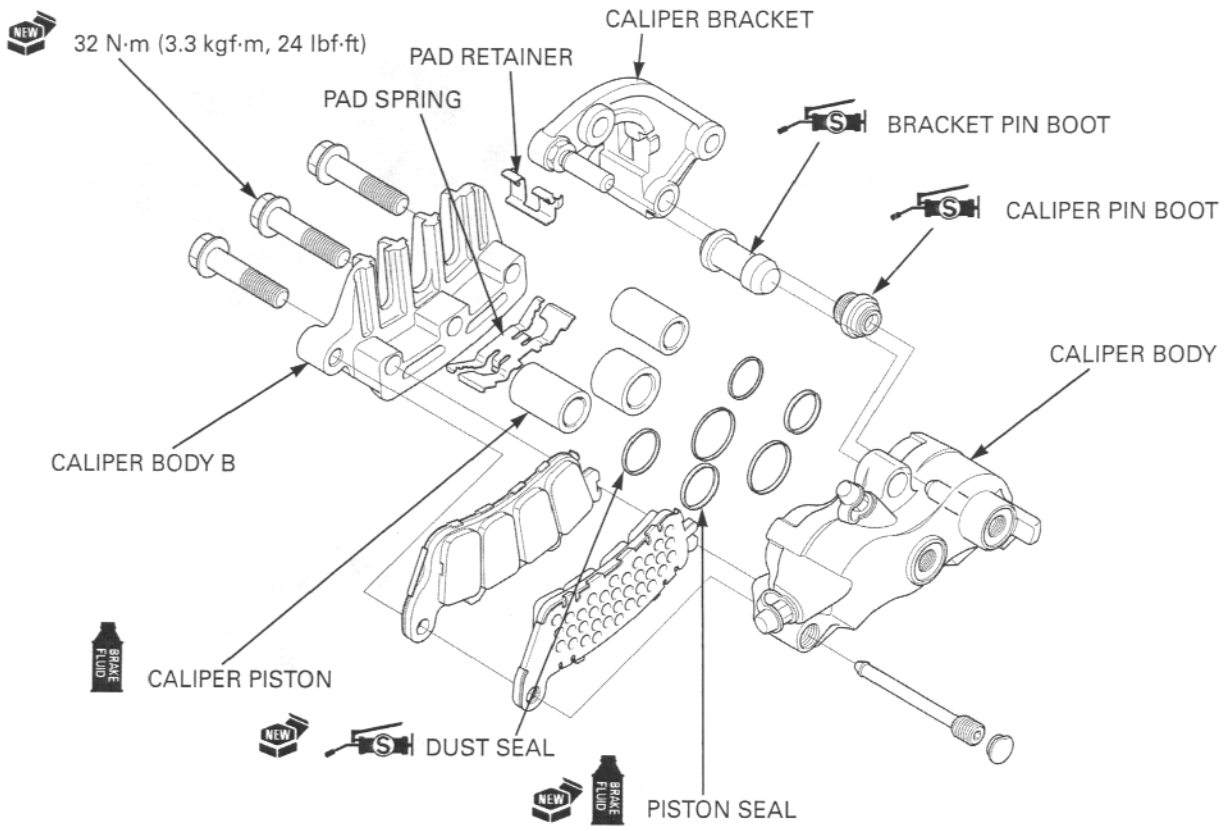

Coat the new piston seals with clean brake fluid.
Coat the new dust seals with silicone grease.

Install the piston and dust seal into the groove of the caliper body.

Coat the caliper pistons with clean brake fluid and install them into the caliper cylinder with their open ends toward the pad.

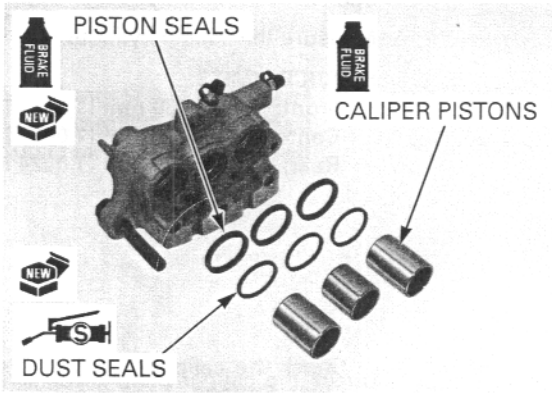

Install the caliper body B and tighten the new bolts to the specified torque.

TORQUE: 32 N·m (3.3 kgf·m, 24 lbf·ft)

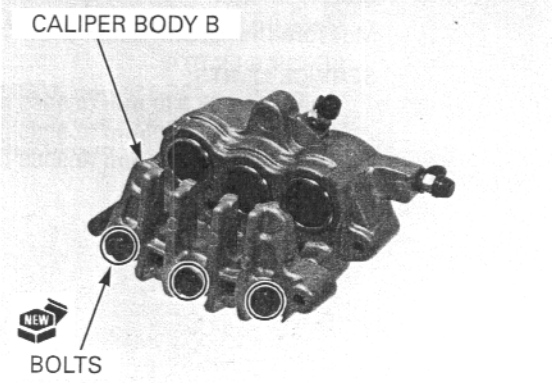

Install the brake pad retainer onto the caliper bracket.

Note the installation direction of the pad spring.

Install the pad spring into the caliper body.

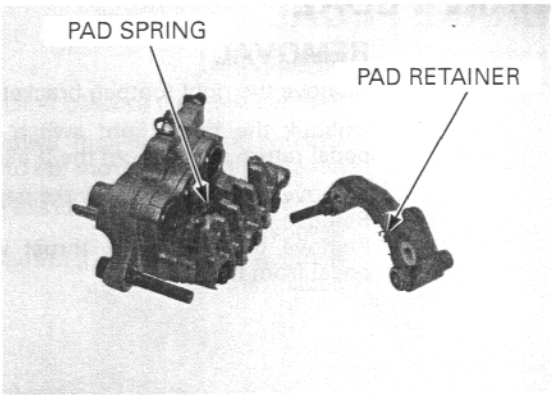

Apply silicone grease to the boot inside, then install them.

Assemble the caliper and bracket.

Install the rear brake pads (page 15-17).

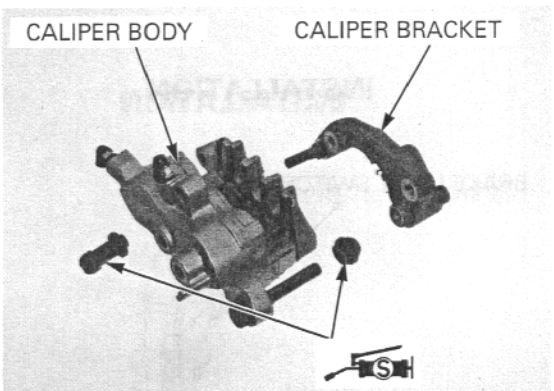

INSTALLATION

Temporarily install the brake hose eyelet joints to the caliper body with new sealing washers and oil bolts.
Install the caliper/bracket assembly onto the caliper support.
Install and tighten the new caliper bracket bolt to the specified torque.

TORQUE: 31 N·m (3.2 kgf·m, 23 lbf·ft)

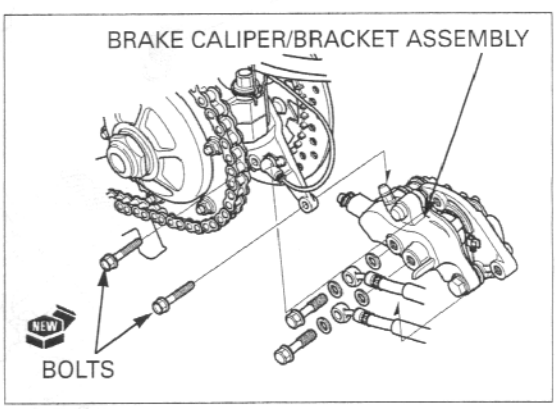

Push the brake hose eyelet to the stopper on the caliper, then tighten the oil bolt to the specified torque.

TORQUE: 34 N·m (3.5 kgf·m, 25 lbf·ft)

Fill and bleed the rear brake hydraulic system (page 15-7).

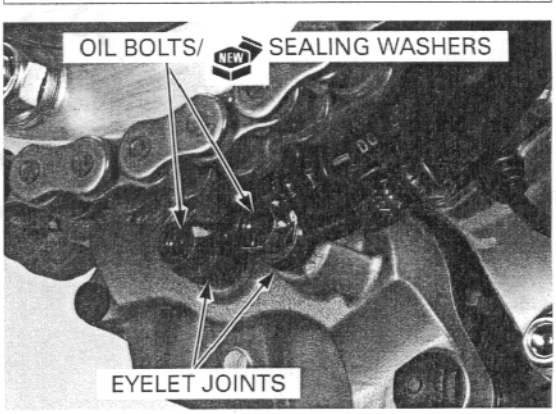

BRAKE PEDAL

REMOVAL

Remove the right footpeg bracket assembly.

Unhook the brake light switch spring and brake pedal return spring from the brake pedal.

Remove and discard the brake pedal joint cotter pin.
Remove the joint pin.
Remove the snap ring, thrust washer and brake pedal from the footpeg.

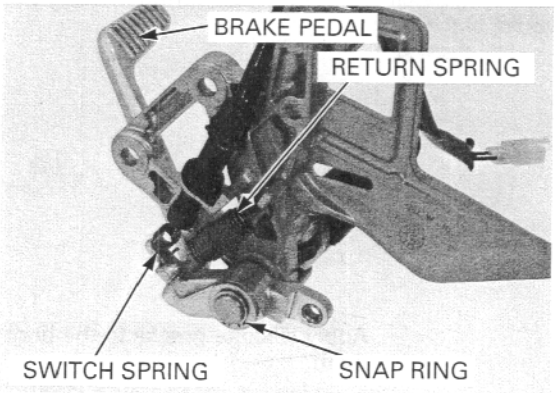

INSTALLATION

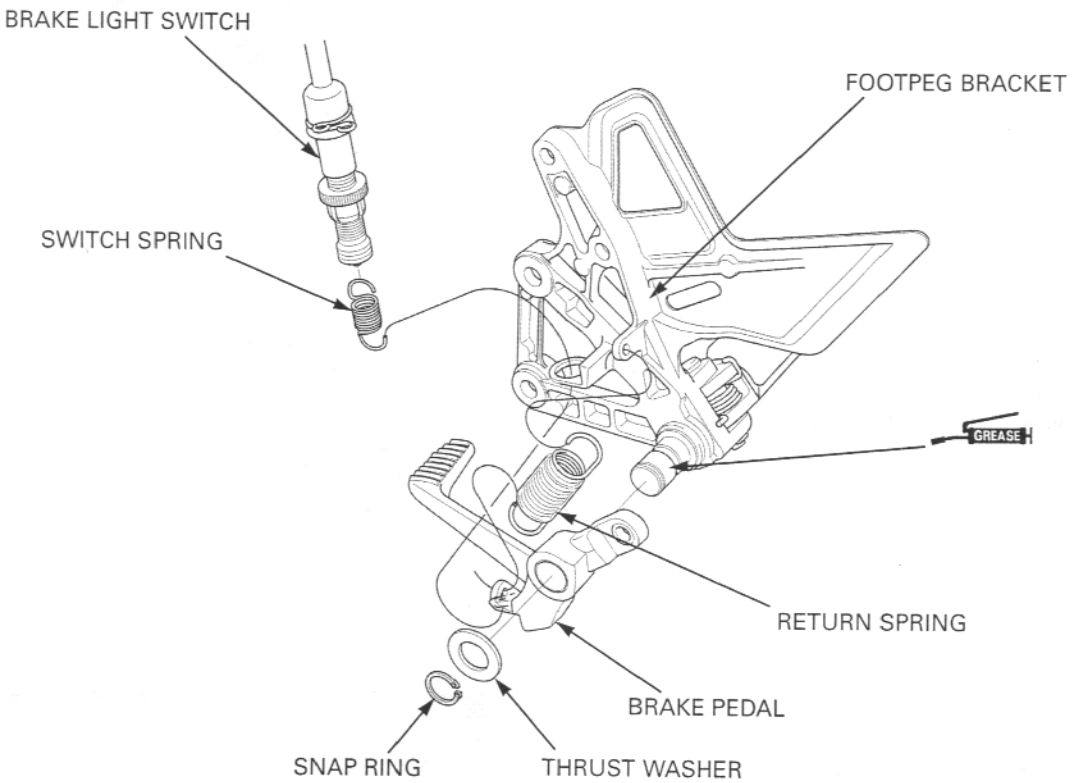

Apply grease to the sliding surface of the brake pedal and footpeg.
Install the brake pedal and thrust washer to the pedal pivot.

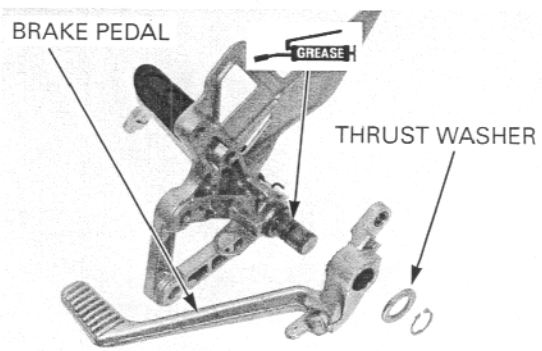

Secure the pedal pivot with a snap ring.

Hook the brake pedal return spring.
Install the brake light switch and hook the switch spring.
Connect the brake pedal to the push rod lower joint.
Install the joint pin and secure it with a new cotter pin.

Install the right footpeg bracket assembly.

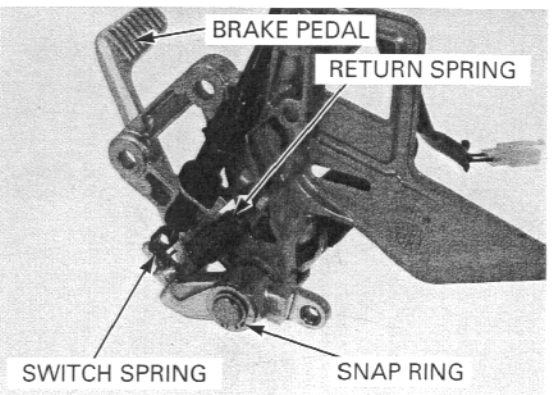

MEMO

16. ANTI-LOCK BRAKE SYSTEM (ABS)

SYSTEM DIAGRAM 16-2

SERVICE INFORMATION 16-3

BEFORE STARTING TROUBLESHOOTING 16-4

BEFORE TROUBLESHOOTING 16-7

TROUBLESHOOTING 16-9

WHEEL SPEED SENSOR 16-31

ABS MODULATOR 16-32

ABS CONTROL UNIT 16-37

SYSTEM DIAGRAM

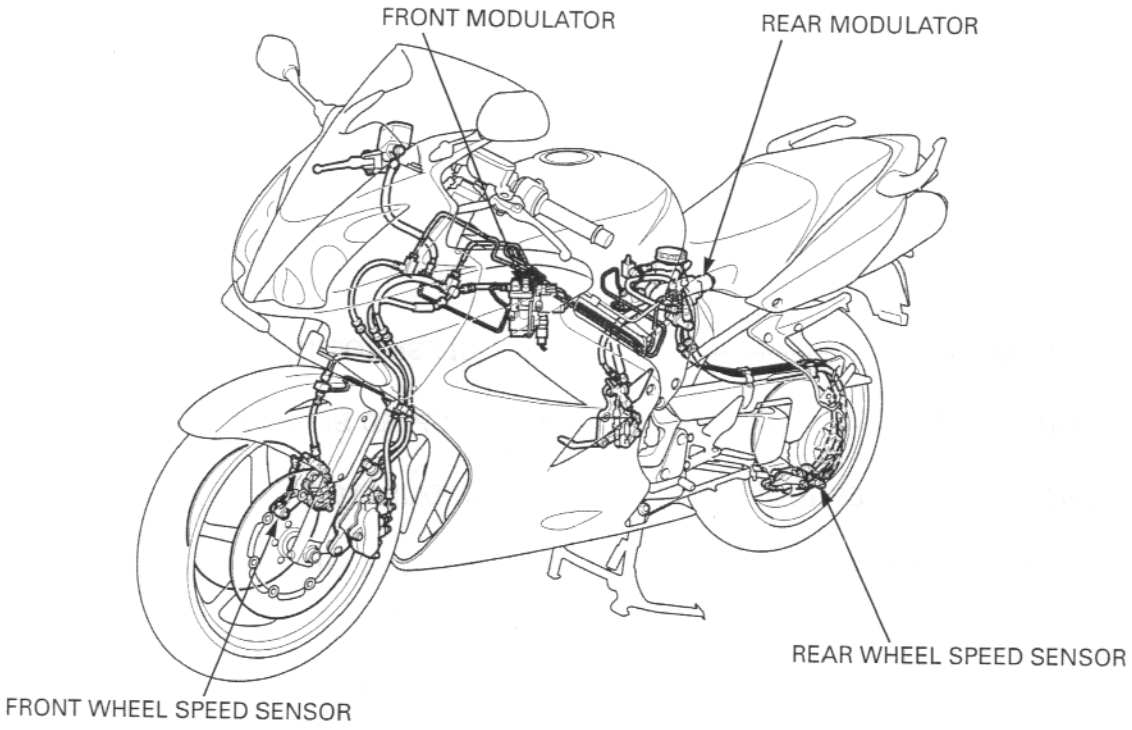

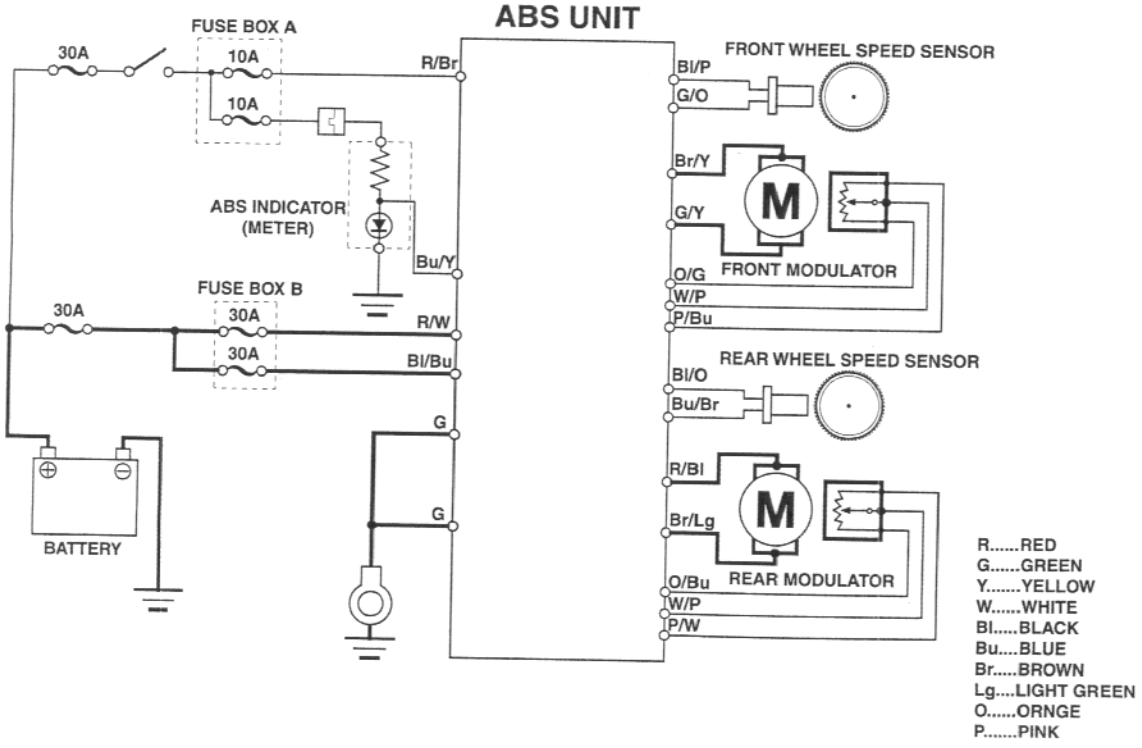

SERVICE INFORMATION

GENERAL

- This section covers service of the Anti-lock Brake System (ABS). For other service of the conventional brake system, see page 15-4.
- When the ABS control unit detects a problem, it stops the ABS function and switches back to the conventional brake operation, and the ABS indicator blinks or stays on. Take care during the test ride.
- When the motorcycle is running and the front wheel leaves the ground for a long time (wheelies), the ABS control unit detects difference of the front and rear wheel speeds and then the indicator blinks.
- Troubles not resulting from a faulty ABS (e.g. brake disc squeak, unevenly worn brake pad) cannot be recognized by the ABS diagnosis system.
- Read "Before Starting Troubleshooting" carefully, inspect and troubleshoot the ABS system according to the Diagnostic Troubleshooting Flow Chart. Observe each step of the procedures one by one. Write down the problem code and probable faulty part before starting diagnosis and troubleshooting.
- After troubleshooting, erase the problem code and perform the pre-start self-diagnosis to be sure that the ABS indicator is operating normally.
- Be careful not to damage the wheel speed sensor and pulser ring when removing and installing the wheel or speed sensor.
- When the wheel speed sensor and/or pulser ring is replaced, check the clearance (air gap) between both components.
- The ABS control unit ECU) may be damaged if dropped. Also if a connector is disconnected when current is flowing, the excessive voltage may damage the ECU. Always turn off the ignition switch before servicing.
- Do not disassemble the ABS modulator. Replace the modulator as an assembly when it is faulty.
- Refer to circuit diagram of ABS (page 16-2).
- The following color codes are used throughout this section.

Bu = Blue	G = Green	Lg = Light Green	R = Red
Bl = Black	Gr = Gray	O = Orange	W = White
Br = Brown	Lb = Light Blue	P = Pink	Y = Yellow

TOEQUE VALUES

Front wheel pulser ring mounting bolt	7 N·m (0.7 kgf·m, 5.1 lbf·ft)	Apply a locking agent to the threads
Rear wheel pulser ring mounting bolt	9 N·m (0.9 kgf·m, 6.5 lbf·ft)	Apply a locking agent to the threads
Modulator body mounting bolt	4 N·m (0.4 kgf·m, 2.9 lbf·ft)	
Angle sensor assembly	4 N·m (0.4 kgf·m, 2.9 lbf·ft)	
Back-up spring cap	2.5 N·m (0.25 kgf·m, 1.8 lbf·ft)	
Modulator oil bolt	34 N·m (3.5 kgf·m, 25 lbf·ft)	
Brake pipe joint bleeder screw	6 N·m (0.6 kgf·m, 4.3 lbf·ft)	

BEFORE STARTING TROUBLESHOOTING

SUMMARY OF ABS PRE-START SELF-DIAGNOSIS SYSTEM

The ABS pre-start self-diagnosis system diagnoses the electrical system as well as the operating status of the modulator. When there is any abnormality, the problem and the problematic part can be detected by outputting the problem code.

When the vehicle is approximately 10 km/h (6 mph) or more, the wheel speed sensor signal is sent to the ABS control unit (ECU), then the ABS pre-start self-diagnosis system operates the control motor on the modulator, checks the crank angle condition with the ABS control unit and this detects whether the modulator operation is normal, and it completes the pre-start self-diagnosis.

When the ABS is normal, the ABS indicator goes off just after a road speed of 10 km/h (6 mph) indicating that the diagnosis is completed.
If a problem is detected, the ABS indicator blinks or comes on and stays on to notify the rider of the problem. The self-diagnosis is also made while the motorcycle is running, and the indicator blinks when a problem is detected.
When the indicator blinks, the cause of the problem can be identified by retrieving the problem code following the specified retrieval procedure (page 16-5).

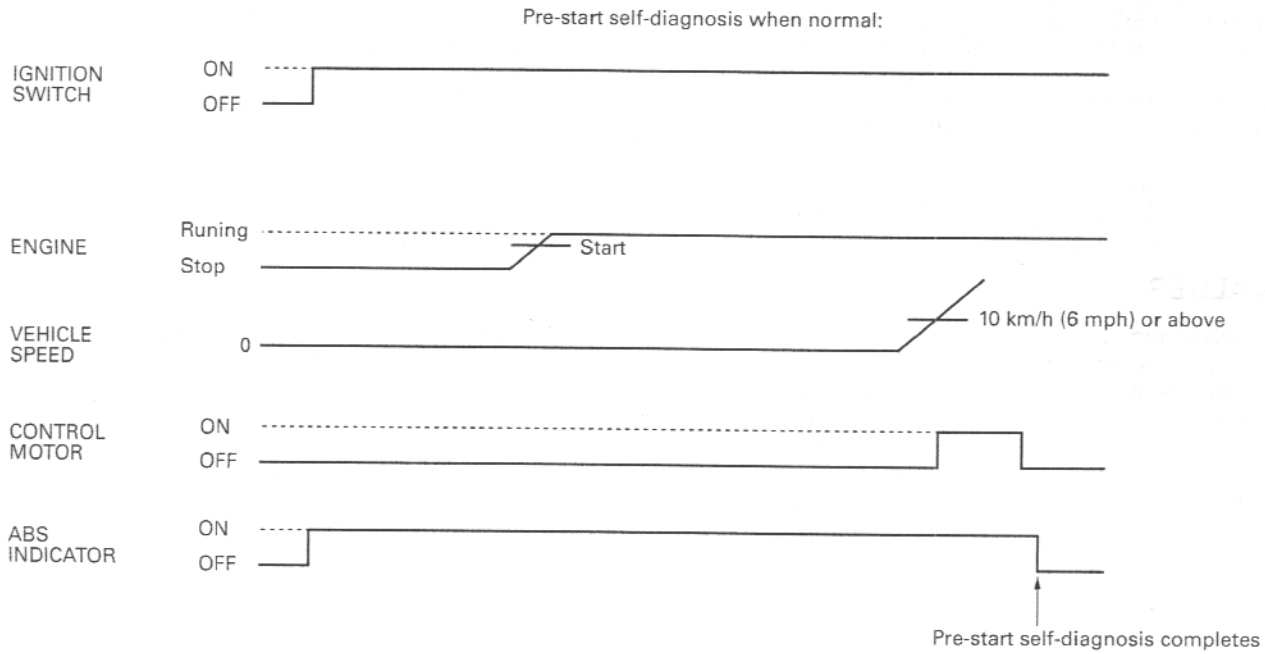

PRE-START SELF-DIAGNOSIS PROCEDURE (Daily check)

1. Turn the ignition switch to "ON".
2. Make sure the ABS indicator comes on.
3. Start the engine.
4. Ride the motorcycle and increase the vehicle speed to approximately 10 km/h (6 mph) (pre-start self-diagnosis completed).
5. The ABS is normal if the ABS indicator goes off.

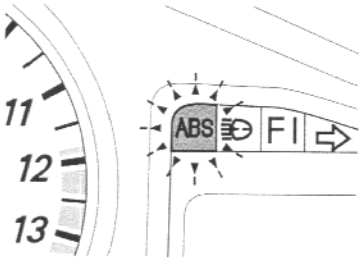

RETRIEVAL/ERASURE OF PROBLEM CODE

- After retrieval, the ABS indicator indicates the problem code by blinking a specified number of times.
- The problem code is not erased by turning the ignition switch to "OFF" while the problem code is being output. Note that turning the ignition switch to "ON" again does not indicate the problem code. To show the problem code again, repeat the problem code retrieval procedures from the beginning.
- The ABS control unit stores up to two problem codes and indicates the latest problem code first, and then the earlier code alternately. When the two problem codes are indicated, begin diagnostic troubleshooting, beginning with the code that was indicated first.
- Be sure to make a note of the retrieval problem code(s).
- After diagnostic troubleshooting, erase the problem code(s) and perform the pre-start self-diagnosis to be sure that there is no problem in the ABS indicator (indicator is operating normally).

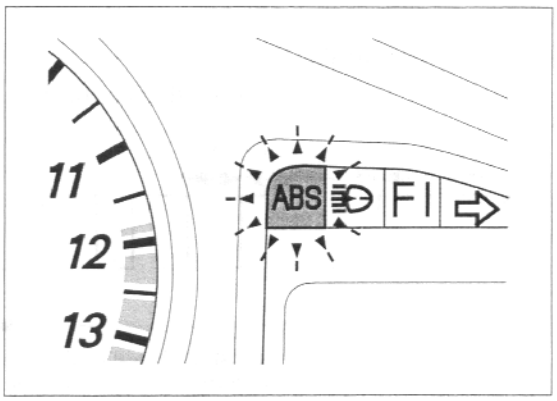

RETRIEVAL:

1. Remove the No.1 and 3 control motor fuses with the ignition switch turned to "OFF" to be sure that each fuse is not burned out.
   If either fuse is burned out, perform the troubleshooting of problem code "4" (No.1 fuse) or "5" (No.3 fuse) without installing the fuse.
2. Turn the ignition switch to "ON". The ABS indicator should come on.
3. Wait for 5 seconds and the ABS indicator goes off.
4. Install either the No.1 or the No.3 fuse immediately after the ABS indicator is off (within 3 seconds).
5. The problem code is indicated by the number of times the ABS indicator blinks.

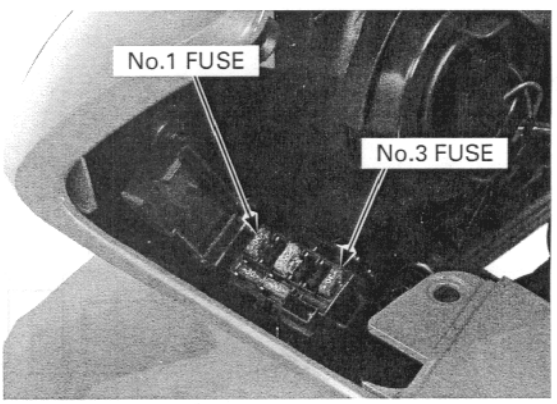

TO ERASE THE PROBLEM CODE:

1. Install the remaining fuse (No.1 or No.3) while the problem code is being indicated (i.e., the ABS indicator is blinking).
2. When code erasure is complete, the ABS indicator stays on.

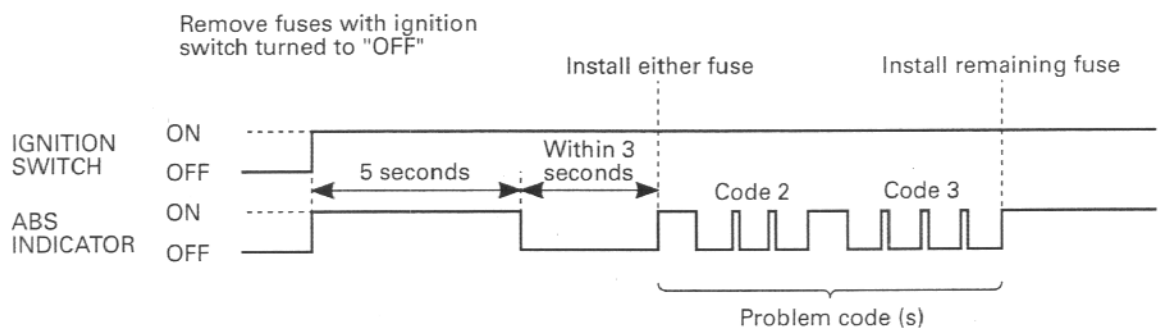

PROBLEM CODE INDICATION PATTERN

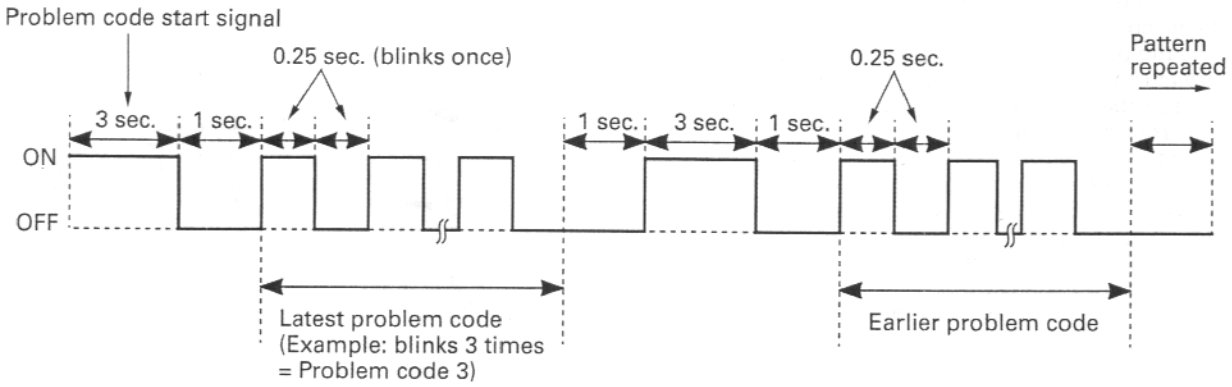

When the problem code is not stored:

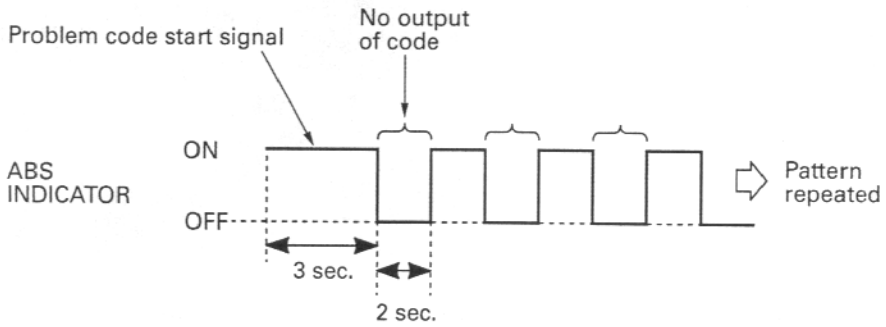

BEFORE TROUBLESHOOTING

SYMPTOM-TO-SYSTEM CHART

- Before performing any ABS troubleshooting, check the pre-start self-diagnosis (page 16-4)

Problem code	Check part and system	Probable faulty part																				Reference page
		Fuse			Modulator				Wheel speed sensor		Pulser ring		Power circuit (charging)	Wire harness	ABS control unit	ABS indicator	Tire		Wheel		Riding conditions (NOTE)	
		ABS main	Modulator control motor		Control motor		Crank angle sensor															
			Front	Rear	Front	Rear	Front	Rear	Front	Rear	Front	Rear					Front	Rear	Front	Rear		
2	Front wheel speed sensor system								O		O			O	O		O		O		O	16-9
3	Rear wheel speed sensor system									O		O		O	O			O		O	O	16-11
4	Front control motor system		O		O		O							O	O							16-13
5	Rear control motor system			O		O		O						O	O							16-15
6	Front crank angle sensor system						O							O	O							16-17
7	Rear crank angle sensor system							O						O	O							16-20
8	ABS control unit: Front control circuit		O		O		O		O		O			O	O		O		O		O	16-9
9	ABS control unit: Rear control circuit			O		O		O		O		O		O	O			O		O	O	16-11
10	ABS control unit: Front relay circuit		O		O		O							O	O							16-23
11	ABS control unit: Rear relay circuit			O		O		O						O	O							16-25
12	ABS control unit: Front motor driver circuit		O		O									O	O							16-26
13	ABS control unit: Rear motor driver circuit			O		O								O	O							16-26
14	Power circuit												O	O	O							16-27
-	Problems not detected by ABS control unit	O											O	O	O	O						16-28

- The ABS indicator might blink in the following cases:
  - The motorcycle has continuously run on bumpy roads.
  - After riding (after the pre-start self-diagnosis), the engine was kept running and the rear wheel turning (for more than 30 seconds) with the motorcycle placed on the center stand.
  - The ABS control unit is disrupted by extremely powerful radio waves (electromagnetic interference). This is a temporary failure. Erase the problem code and perform the pre-start self-diagnosis. The ABS is normal if the ABS indicator goes off.

DIAGNOSTIC TROUBLESHOOTING FLOW CHART

NOTICE

Be careful not to damage the wheel speed sensor and pulser ring when servicing.

- All connector diagrams in the flow charts are viewed from the terminal side.
- Perform inspection with the ignition switch turned to "OFF", unless otherwise specified.
- Use a fully charged battery. Do not diagnose with a charger connected to the battery.
- When the ABS control unit or modulator is detected to be faulty, recheck the wire harness and connector connections closely before replacing it.
- After troubleshooting, erase the problem code and perform the pre-start self-diagnosis to be sure that the ABS indicator is operating normally.
- The ABS indicator might blink in the following cases.
  - Incorrect tire pressure.
  - Tires not recommended for the motorcycle were installed (incorrect tire size).
- The ABS indicator might blink while riding under the following conditions. Erase the problem code and perform the pre-start self-diagnosis. The ABS is normal if the indicator goes off. Ask the rider for the riding conditions in detail when the motorcycle is brought in for inspection.
  - The motorcycle has continuously run bumpy roads.
  - After riding (after the pre-start self-diagnosis), the engine was kept running and the rear wheel turning (for more than 30 seconds) with the motorcycle placed on the center stand.
- If the pulser ring or speed sensor is replaced, perform the air gap inspection (page 16-31).

TROUBLESHOOTING

Problem code 2 and 8: Front wheel speed sensor system and ABS control unit

1. **Wheel Pulser Air Gap Inspection**

   Check the area around the front wheel speed sensor.

   Measure the air gap between the speed sensor and pulser ring.

Standard air gap: 0.4 - 1.2 mm (0.02 - 0.05 in)

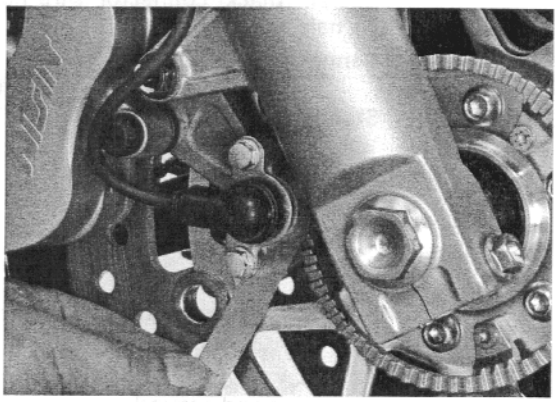

Is there correct air gap?

NO – Check each part for deformation and looseness and correct accordingly.

YES – GO TO STEP 2.

2. **Wheel Pulser Magnetic Deposits Inspection**

   Check for iron or other magnetic deposits between the pulser ring and speed sensor.

   Check for a loose pulser ring or speed sensor.

   Check the pulser ring for deformation or damage (e.g., chipped teeth) and the speed sensor tip for damage.

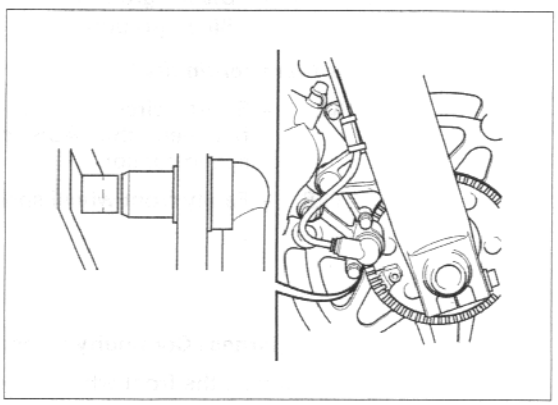

Are there any deposits between gap?

YES – Remove any deposits and install properly or replace any faulty part.

NO – GO TO STEP 3.

3. **The ABS Indicator Function Inspection**

   Retrieve the problem code and erase it.

   With the ignition switch turned to "ON" (do not operate the ignition switch after erasing the problem code), turn the front wheel by hand (vehicle speed; approximately 4 km/h (2.5 mph) or above) and check the ABS indicator blinks.

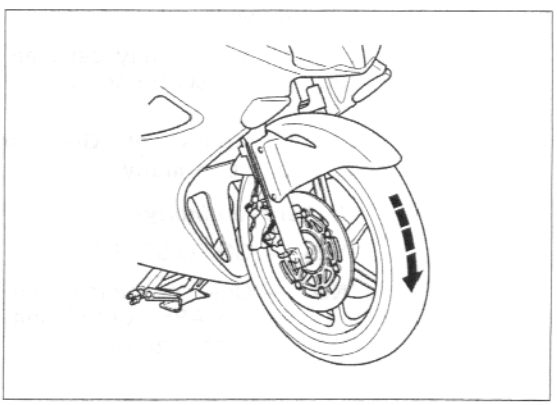

Is the indicator blinking?

YES – • The ABS control unit has been disrupted by an extremely powerful radio wave.
• Check the connector and wire harness of the wheel speed sensor system for loose connection.

NO – GO TO STEP 4.

4. Speed Sensor Line Short Circuit Inspection at ABS Control Unit

Disconnect the ABS control unit 12P (Black) connector.

Measure for continuity between the ABS control 12P (Black) connector wire harness side terminals and ground.

Connection: Black/pink - ground
Green/orange - ground
Standard: No continuity

Is there continuity?

YES – GO TO STEP 6.

NO – GO TO STEP 5.

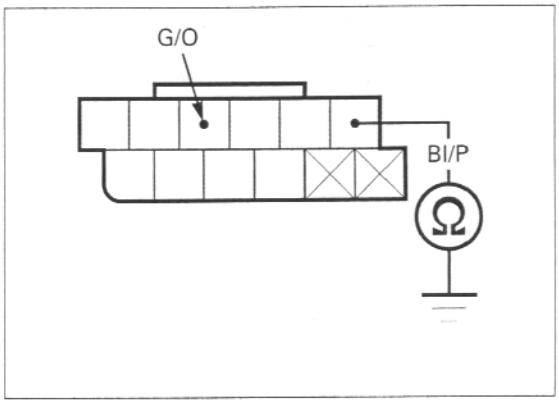

5. Speed Sensor Line Short Circuit Inspection at Sensor Connector

Check for continuity between the sensor side terminals and ground.

Connection: Black - ground
Blue - ground

Is there continuity?

NO – Short circuit in the wire harness between the ABS control unit and speed sensor.

YES – Faulty front wheel speed sensor.

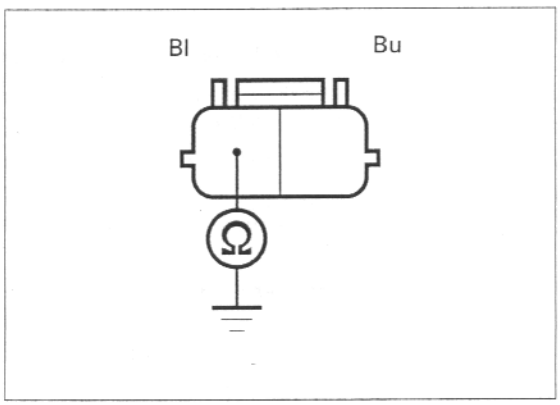

6. Wire Harness Continuity Inspection

Disconnect the front wheel speed sensor 2P connector.
Short the terminals of the connector with a jumper wire.

Check for continuity between the ABS control unit 12P (Black) connector wire harness side terminals.

Connection: Black/pink - Green/orange
Standard: Continuity

Is there continuity?

YES – GO TO STEP 7.

NO – Open or short circuit in wire between the ABS control unit and front wheel speed sensor.

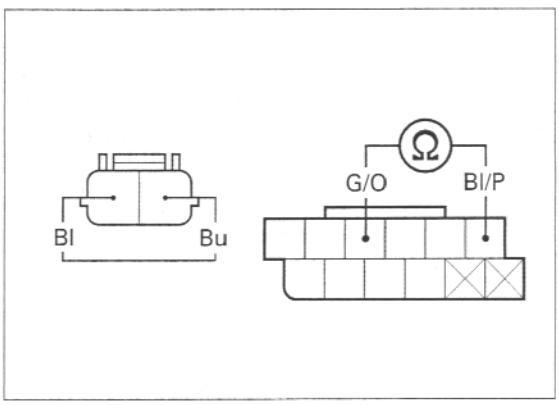

7. Rechecking Indicator Function

Remove the front wheel speed sensor and replace it with a new one.

Connect the ABS control unit 12P (Black) connector.

Perform the pre-start self-diagnosis and check the ABS indicator.

Is the indicator blinking?

YES – Faulty ABS control unit.

NO – Faulty removed wheel speed sensor.

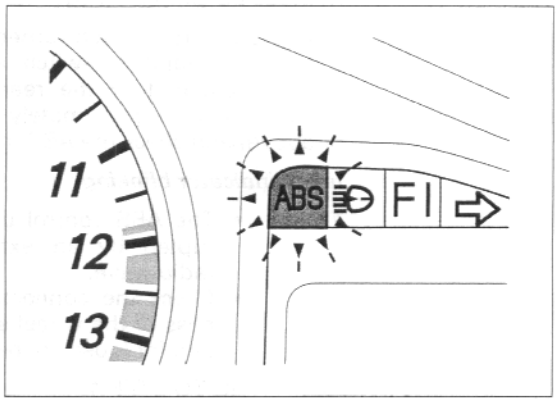

Problem code 3 and 9: Rear wheel speed sensor system and ABS control unit

1. Wheel Pulser Air Gap Inspection

Check the area around the rear wheel speed sensor.

Measure the air gap between the speed sensor and pulser ring.

Standard air gap: 0.4 - 1.2 mm (0.02 - 0.05 in)

Is there correct air gap?

NO – Check each part for deformation and looseness and correct accordingly.

YES – GO TO STEP 2.

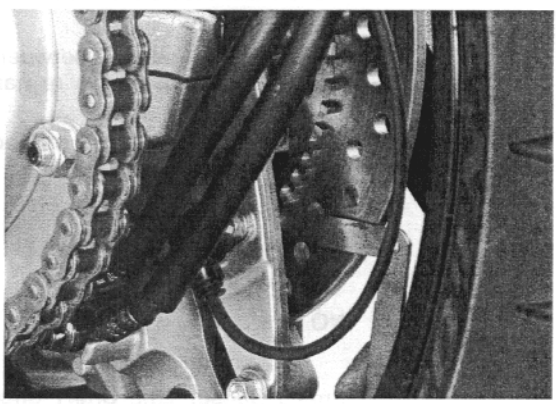

2. Wheel Pulser Magnetic Deposits Inspection

Check for iron or other magnetic deposits between the pulser ring and speed sensor.

Check for a loose pulser ring or speed sensor.

Check the pulser ring for deformation or damage (e.g., chipped teeth) and the speed sensor tip for damage.

Are there any deposits between gap?

YES – Remove any deposits and install properly or replace any faulty part.

NO – GO TO STEP 3.

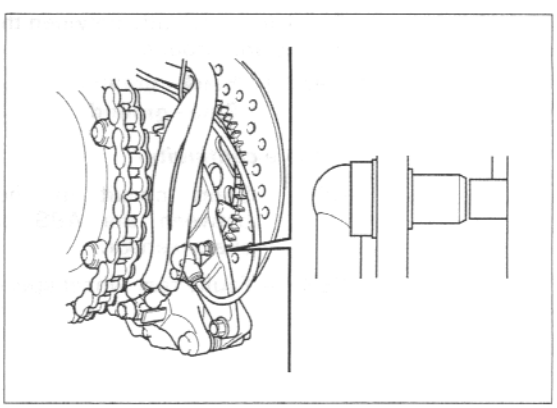

3. **The ABS Indicator Function Inspection**

   Retrieve the problem code and erase it.

   With the ignition switch turned to "ON" (do not operate the ignition switch after erasing the problem code), turn the rear wheel by hand (vehicle speed; approximately 4 km/h (2.5 mph) or above) and check the ABS indicator blinks.

   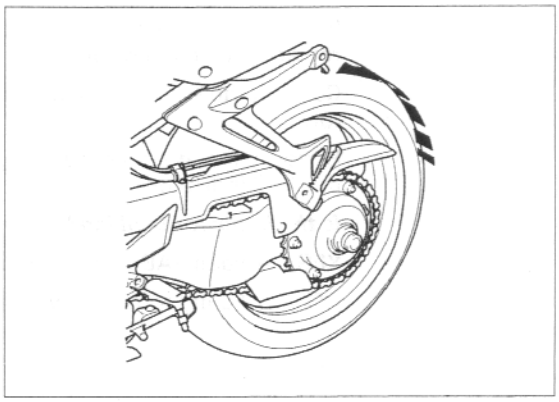

   Is the indicator blinking?

   YES – • The ABS control unit has been disrupted by an extremely powerful radio wave.
   • Check the connector and wire harness of the wheel speed sensor system for loose connection.

   NO – GO TO STEP 4.

4. **Speed Sensor Line Short Circuit Inspection at ABS Control Unit**

   Disconnect the ABS control unit 12P (Black) connector.

   Measure for continuity between the ABS control 12P (Black) connector wire harness side terminals and ground.

   Connection: Black/orange - ground
   Blue/brown - ground
   Standard: No continuity

   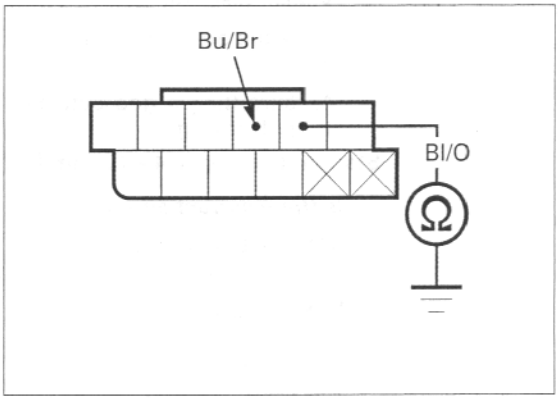

   Is there continuity?

   YES – GO TO STEP 6.

   NO – GO TO STEP 5.

5. **Speed Sensor Line Short Circuit Inspection at Sensor Connector**

   Check for continuity between the sensor side terminals and ground.

   Connection: Black - ground
   Blue - ground

   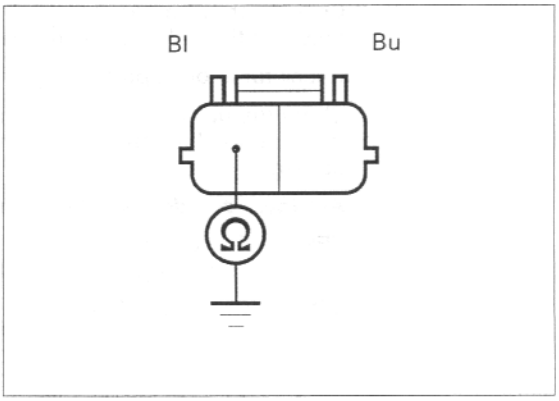

   Is there continuity?

   NO – Short circuit in the wire harness between the ABS control unit and speed sensor.

   YES – Faulty rear wheel speed sensor.

6. Wire Harness Continuity Inspection

Disconnect the rear wheel speed sensor 2P connector.
Short the terminals of the connector with a jumper wire.

Check for continuity between the ABS control unit 12P (Black) connector wire harness side terminals.

Connection: Black/orange - Blue/brown
Standard: Continuity

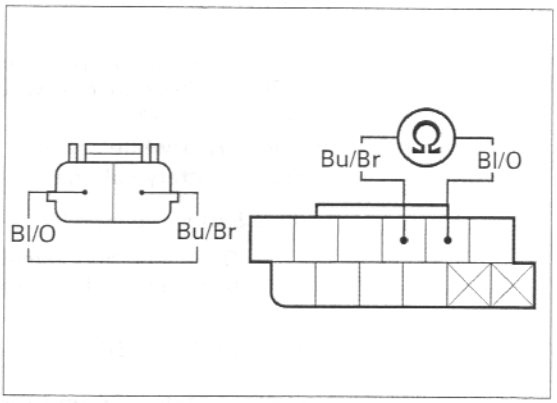

Is there continuity?

YES – GO TO STEP 7.

NO – Open or short circuit in wire between the ABS control unit and rear wheel speed sensor.

7. Rechecking Indicator Function

Remove the rear wheel speed sensor and replace it with a new one.

Connect the ABS control unit 12P (Black) connector.

Perform the pre-start self-diagnosis and check the ABS indicator.

Is the indicator blinking?

YES – Faulty ABS control unit.

NO – Faulty removed wheel speed sensor.

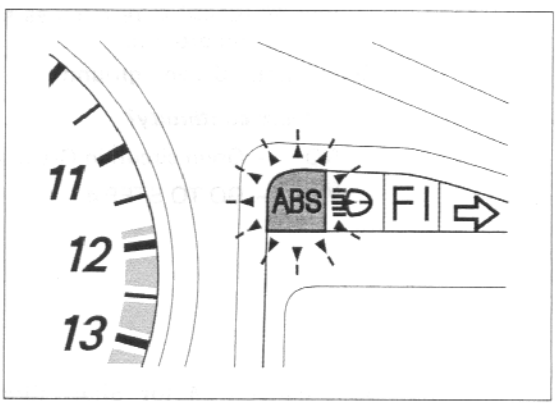

Problem code 4: Front modulator control motor system

1. ABS Indicator Function Rechecking

Before troubleshooting check for the following:

- Front ABS fuse 30A connection.
- Short or open circuit in wire harness between the fuse box and ABS control unit.

Retrieve the problem code and erase it.
Perform the pre-start self-diagnosis and check the ABS indicator.

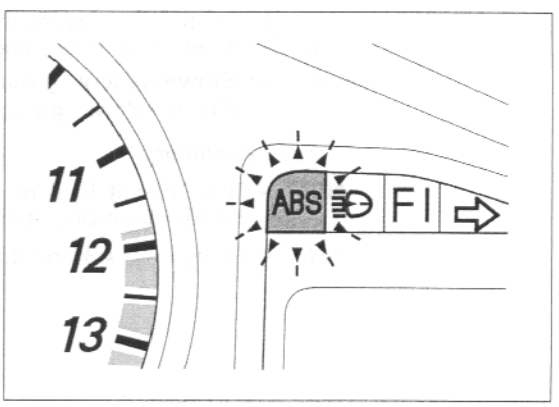

Is the indicator still blinking?

NO – • Fine foreign matter in modulator or the ABS control unit has been disrupted by an extremely powerful radio wave.
• Check the connector and wire harness of the speed sensor system for loose connection.

YES – GO TO STEP 2.

2. ABS Control Unit Battery Voltage Inspection

Disconnect the ABS control unit 5P (Black) connector.

Measure the voltage between the ABS control unit 5P (Black) connector wire harness side terminal and ground.

Connection: Red/white - ground
Standard: Battery voltage

Is there battery voltage?

NO – Open or short circuit in wire harness between the fuse box and ABS control unit.

YES – GO TO STEP 3.

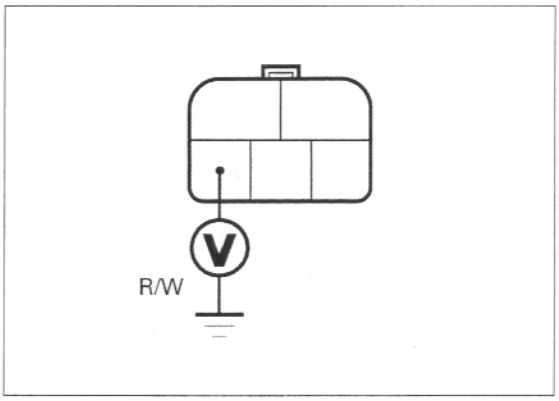

3. Modulator Motor Ground Circuit Inspection at ABS Control Unit

Check for continuity between the ABS control unit 5P (Black) wire harness side connector terminals and ground.

Connection: Green - ground

Is there continuity?

NO – Open circuit in Green wire.

YES – GO TO STEP 4.

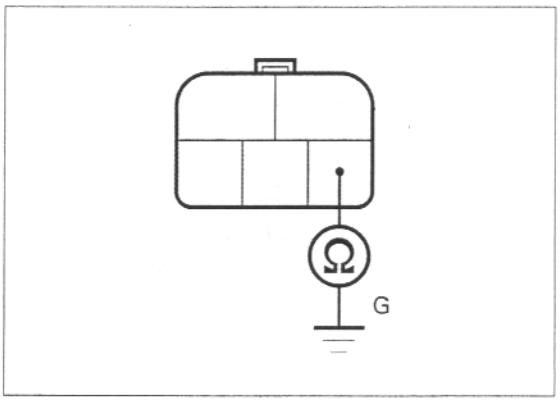

4. Modulator Motor Short Circuit Inspection at Modulator Connector

Disconnect the front ABS modulator 2P connector.

Check for continuity between the ABS modulator side 2P connector terminals and ground.

Connection: Brown/yellow - ground
Green/yellow - ground

Is there continuity?

NO – Short circuit in wire harness between the ABS control unit and modulator.

YES – Faulty front ABS modulator.

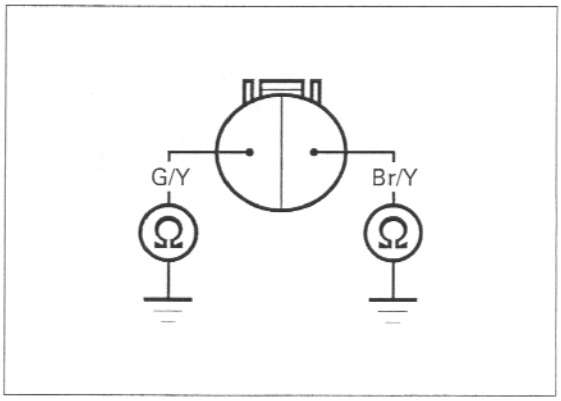

5. **Wire Harness Open Circuit Inspection Between the Modulator and Control Unit**

Disconnect the ABS control unit 5P (Black) connector

Check for continuity between the ABS modulator 2P wire harness side connector and ABS control unit 5P (Black) wire harness side connector.

Connection: Brown/Yellow - Brown/Yellow
Green/Yellow - Green/Yellow

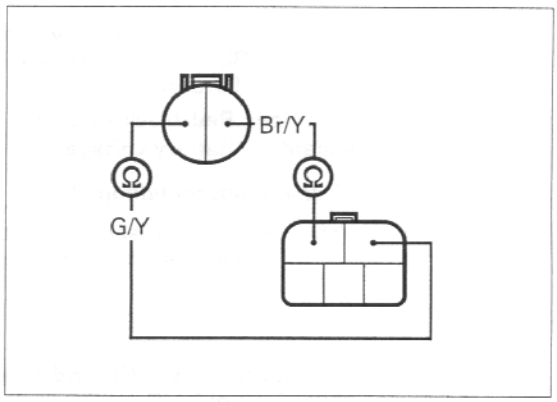

Is there continuity?

NO – Open circuit in wire harness between the ABS control unit and modulator.

YES – GO TO STEP 6.

6. **Modulator Motor Inspection by Replacing Front and Rear Modulators**

Connect the ABS control unit 5P (Black) connector.
Remove the front and rear modulators and interchange them.
Connect the front modulator 3P (Gray) and 2P connectors to the rear modulator.
Connect the rear modulator 3P (Gray) and 2P connectors to the front modulator.

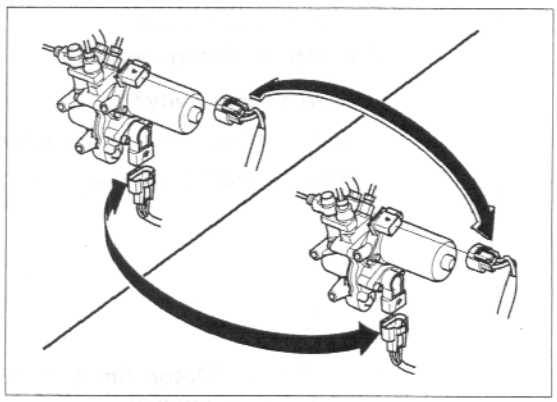

Perform the pre-start self-diagnosis and retrieve the problem code, and record it.

Is any problem code indicated?

5 blinks–Faulty front ABS modulator.

4 blinks–Faulty ABS control unit.

Problem code 5: Front modulator control motor system

1. **ABS Indicator Function Rechecking**

Before troubleshooting check for the following:

- Rear ABS fuse 30A connection.
- Short or open circuit in wire harness between the fuse box and ABS control unit.

Retrieve the problem code and erase it.
Perform the pre-start self-diagnosis and check the ABS indicator.

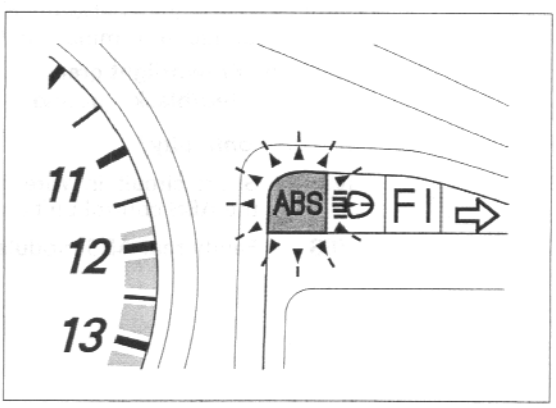

Is the indicator still blinking?

NO – • Fine foreign matter in modulator or the ABS control unit has been disrupted by an extremely powerful radio wave.
• Check the connector and wire harness of the speed sensor system for loose connection.

YES – GO TO STEP 2.

2. **ABS Control Unit Battery Voltage Inspection**

Disconnect the ABS control unit 5P (Brown) connector.

Measure the voltage between the ABS control unit 5P (Black) connector wire harness side terminal and ground.

Connection: Red/black - ground
Standard: Battery voltage

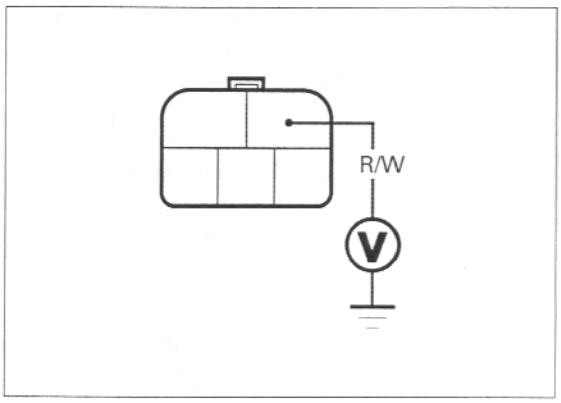

Is there battery voltage?

NO – Open or short circuit in wire harness between the fuse box and ABS control unit.

YES – GO TO STEP 3.

3. **Modulator Motor Ground Circuit Inspection at ABS Control Unit**

Check for continuity between the ABS control unit 5P (Brown) wire harness side connector terminals and ground.

Connection: Green - ground

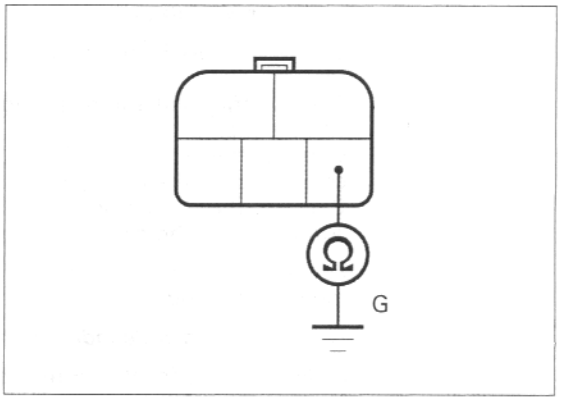

Is there continuity?

NO – Open circuit in Green wire.

YES – GO TO STEP 4.

4. **Modulator Motor Short Circuit Inspection at Modulator Connector**

Disconnect the rear ABS modulator 2P connector.

Check for continuity between the ABS modulator side 2P connector terminals and ground.

Connection: Brown/light green - ground
Red/black - ground

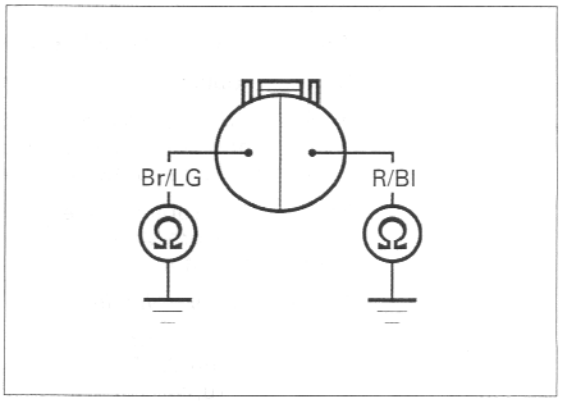

Is there continuity?

NO – Short circuit in wire harness between the ABS control unit and modulator.

YES – Faulty rear ABS modulator.

5. **Wire Harness Open Circuit Inspection Between the Modulator and Control Unit**

Disconnect the ABS control unit 5P (Brown) connector

Check for continuity between the ABS modulator 2P wire harness side connector and ABS control unit 5P (Black) wire harness side connector.

Connection: Brown/light green - Brown/light green
Red/black - Red/black

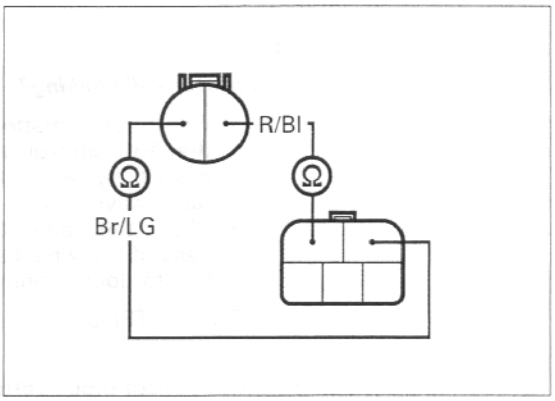

Is there continuity?

NO – Open circuit in wire harness between the ABS control unit and modulator.

YES – GO TO STEP 6.

6. **Modulator Motor Inspection by Replacing Front and Rear Modulators**

Connect the ABS control unit 5P (Brown) connector.
Remove the front and rear modulators and interchange them.
Connect the front modulator 3P (Gray) and 2P connectors to the rear modulator.
Connect the rear modulator 3P (Gray) and 2P connectors to the front modulator.

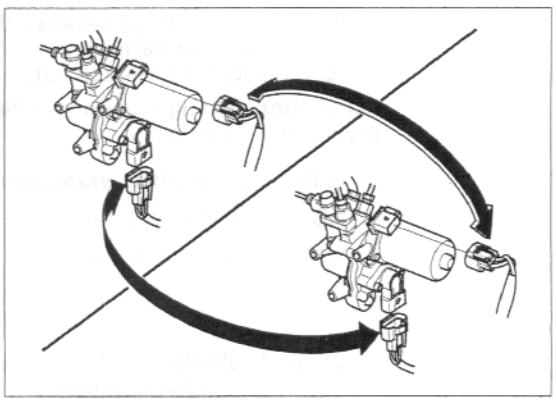

Perform the pre-start self-diagnosis, retrieve the problem code and record it.

Is any problem code indicated?

4 blinks–Faulty rear ABS modulator.

5 blinks–Faulty ABS control unit.

Problem code 6: Front modulator crank angle sensor system inspection

1. **ABS Indicator Checking**

Turn the ignition switch to "ON" and check the ABS indicator.

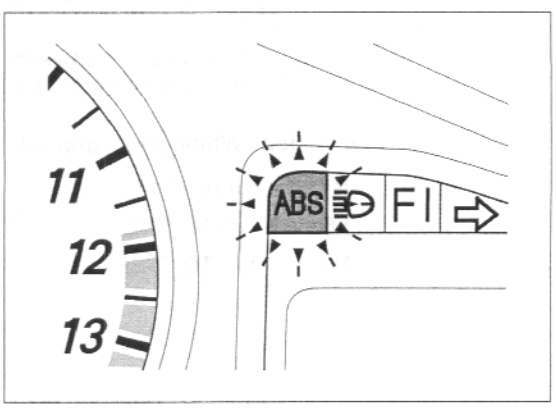

Is the indicator blinking?

YES – GO TO STEP 2.

NO – GO TO STEP 3.

2. **ABS Indicator Function Rechecking**

Retrieve the problem code and erase it.

Perform the pre-start self-diagnosis and check the ABS indicator.

Is the indicator still blinking?

NO – • Fine foreign matter in modulator or the ABS control unit has been disrupted by an extremely powerful radio wave.
• Check the connector and wire harness of the wheel speed sensor system for loose connection.

YES – GO TO STEP 3.

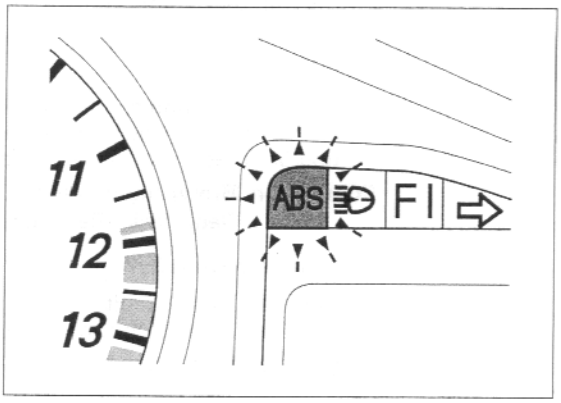

3. **Crank Angle Sensor Input Voltage Inspection**

Disconnect the front ABS modulator 3P (Light gray) connector.

Measure the voltage between the 3P (Light gray) connector wire harness side terminals with the ignition switch turned to "ON".

Connection: Orange/green (+) - Pink/blue (-)
Standard: 4.5 - 5.5 V

Is the voltage within standard value?

NO – GO TO STEP 8.

YES – GO TO STEP 4.

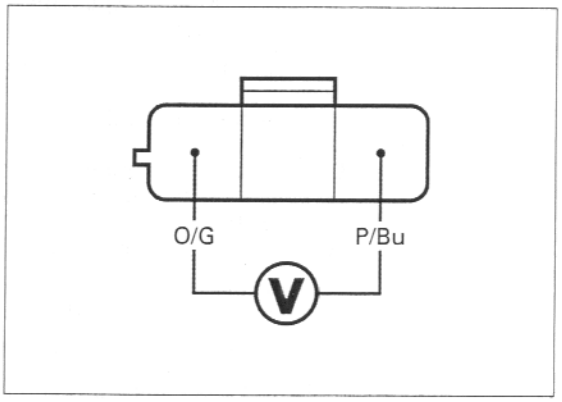

4. **Crank Angle Sensor Short Circuit Inspection at ABS Control Unit Connector**

Disconnect the ABS control unit 12P (Black) connector.

Connect the front ABS modulator 3P (Light gray) connector.

Check for continuity between the ABS control unit 12P (Black) wire harness side connector and ground.

Connection: White/pink - ground

Is there continuity?

YES – GO TO STEP 5.

NO – GO TO STEP 6.

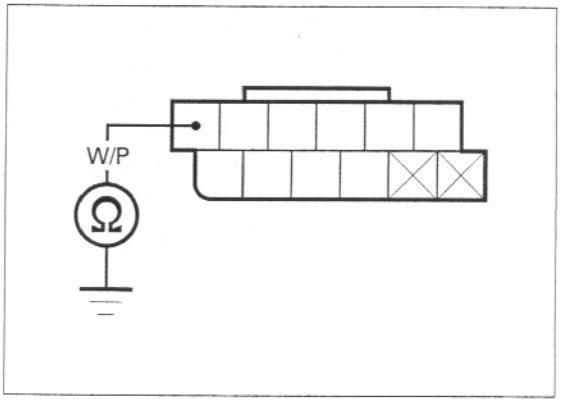

5. Crank Angle Sensor Short Circuit Inspection at Modulator Connector

Disconnect the front ABS modulator 3P (Light gray) connector.

Check for continuity between the front ABS modulator 3P (Light gray) connector and ground.

Connection: White/pink - ground

Is there continuity?

NO – Open circuit in wire harness between the front ABS modulator and the ABS control unit.

YES – GO TO STEP 7.

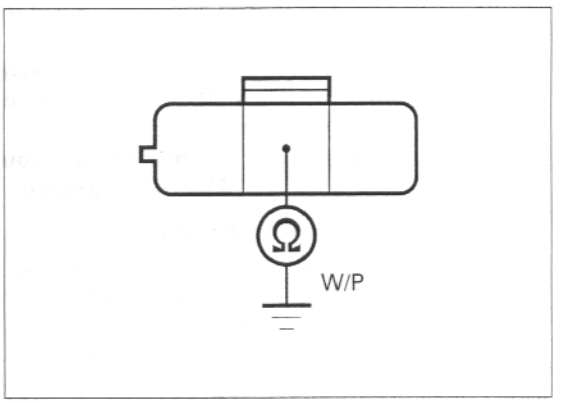

6. Wire Harness Continuity Inspection

Disconnect the front ABS modulator 3P (Light gray) connector.

Check for continuity between the ABS control unit 12P (Black) connector and front modulator 3P (Light gray) connector.

Connection: White/pink - White/pink

Is there continuity?

NO – Open circuit in wire harness between the front ABS modulator and the ABS control unit.

YES – GO TO STEP 7.

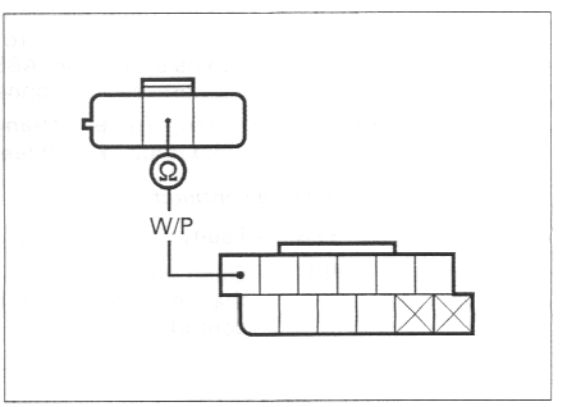

7. Modulator Inspection by Replacing the Front and Rear Modulators

Connect the ABS control unit 5P (Black) connector.

Remove the front and rear modulators and interchange them.

Connect the front modulator 3P (Gray) and 2P connectors to the rear modulator.

Connect the rear modulator 3P (Gray) and 2P connectors to the front modulator.

Perform the pre-start self-diagnosis, retrieve the problem code and record it.

Is any problem code indicated?

7 blinks–Faulty front ABS modulator.

6 blinks–Faulty ABS control unit.

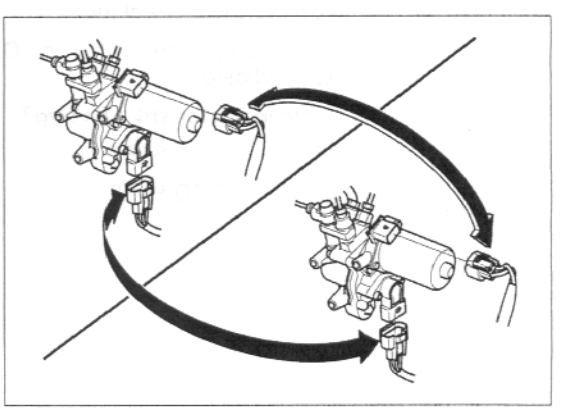

8. **Wire Harness Short Circuit Inspection for Front Modulator**

Disconnect the ABS control unit 5P (Black) connector.

Check for continuity between the front ABS modulator 3P (Light gray) wire harness side connector terminal and ground.

Connection: Orange/green - ground
Pink/blue - ground

Is there continuity?

YES – Short circuit in wire harness between the front ABS modulator and the ABS control unit.

NO – GO TO STEP 9.

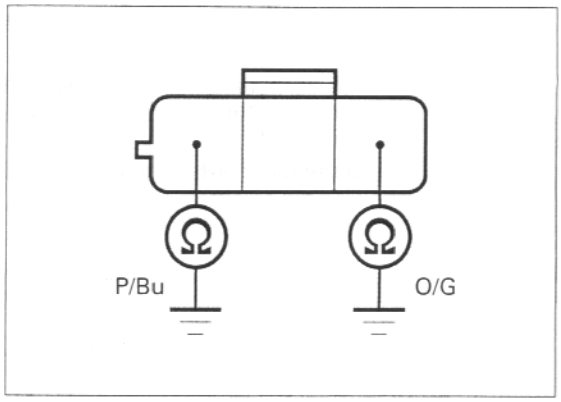

9. **Wire Harness Continuity Inspection**

Check for continuity between the front ABS modulator 3P (Light gray) wire harness side connector terminals and the ABS control unit 5P (Black) wire harness side connector terminals.

Connection: Orange/green - Orange/green
Pink/blue - Pink/blue

Is there continuity?

YES – Faulty ABS control unit.

NO – Open circuit in wire harness between the front ABS modulator and the ABS control unit.

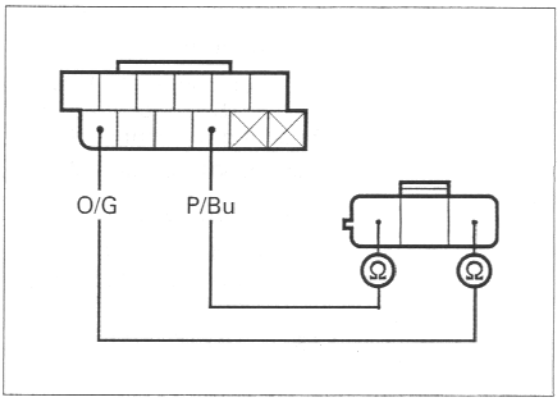

Problem code 7: Rear modulator crank angle sensor system inspection

1. **ABS Indicator Checking**

Turn the ignition switch to "ON" and check the ABS indicator.

Is the indicator still blinking?

YES – GO TO STEP 2.

NO – GO TO STEP 3.

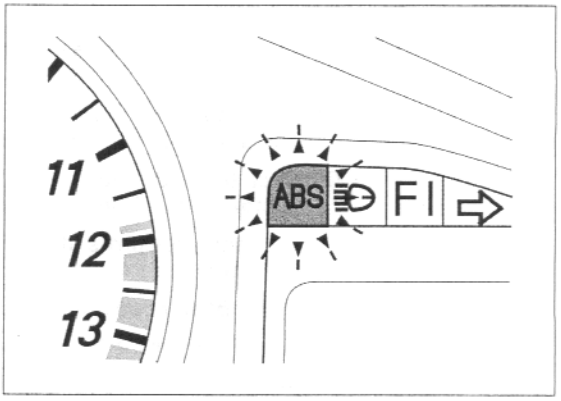

2. **ABS Indicator Function Rechecking**

   Retrieve the problem code and erase it.

   Perform the pre-start self-diagnosis and check the ABS indicator.

   Is the indicator still blinking?

   NO – • Fine foreign matter in modulator or the ABS control unit has been disrupted by an extremely powerful radio wave.
   • Check the connector and wire harness of the wheel speed sensor system for loose connection.

   YES – GO TO STEP 3.

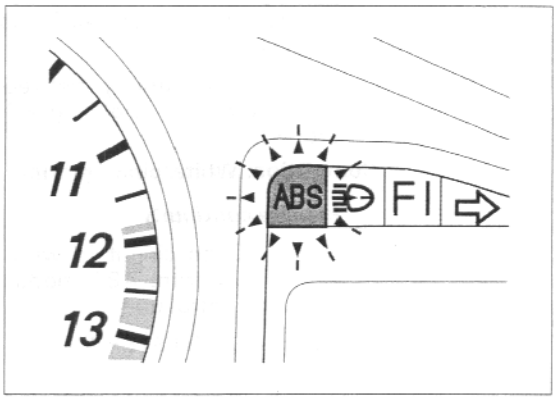

3. **Crank Angle Sensor Input Voltage Inspection**

   Disconnect the rear ABS modulator 3P (Light gray) connector.

   Measure the voltage between the 3P (Light gray) connector wire harness side terminals with the ignition switch turned to "ON".

Connection: Orange/blue (+) - Pink/white (-)
Standard: 4.5 - 5.5 V

   Is the voltage within standard value?

   NO – GO TO STEP 8.

   YES – GO TO STEP 4.

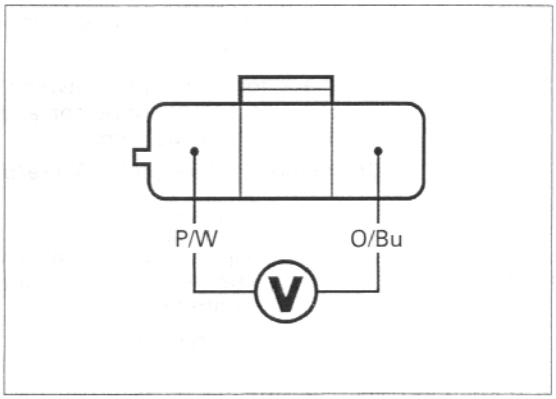

4. **Crank Angle Sensor Short Circuit Inspection at ABS Control Unit Connector**

   Disconnect the ABS control unit 12P (Black) connector.

   Connect the rear ABS modulator 3P (Light gray) connector.

   Check for continuity between the ABS control unit 12P (Black) wire harness side connector and ground.

Connection: White/pink - ground

   Is there continuity?

   YES – GO TO STEP 5.

   NO – GO TO STEP 6.

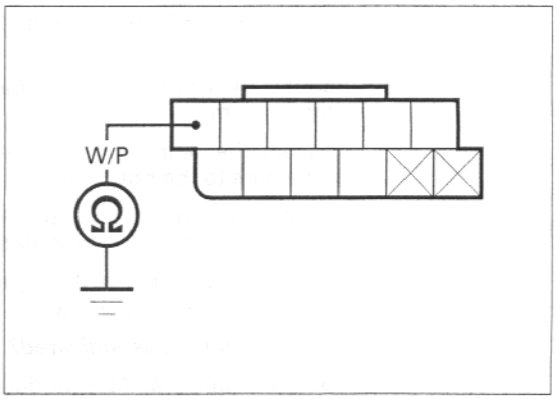

5. **Crank Angle Sensor Short Circuit Inspection at Modulator Connector**

Disconnect the front ABS modulator 3P (Light gray) connector.

Check for continuity between the front ABS modulator 3P (Light gray) connector and ground.

Connection: White/pink - ground

Is there continuity?

NO – Open circuit in wire harness between the front ABS modulator and the ABS control unit.

YES – GO TO STEP 7.

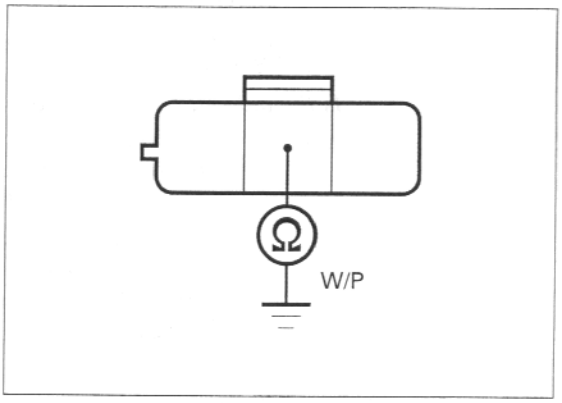

6. **Wire Harness Continuity Inspection**

Disconnect the front ABS modulator 3P (Light gray) connector.

Check for continuity between the ABS control unit 12P (Black) connector and front modulator 3P (Light gray) connector.

Connection: White/pink - White/pink

Is there continuity?

NO – Open circuit in wire harness between the rear ABS modulator and the ABS control unit.

YES – GO TO STEP 7.

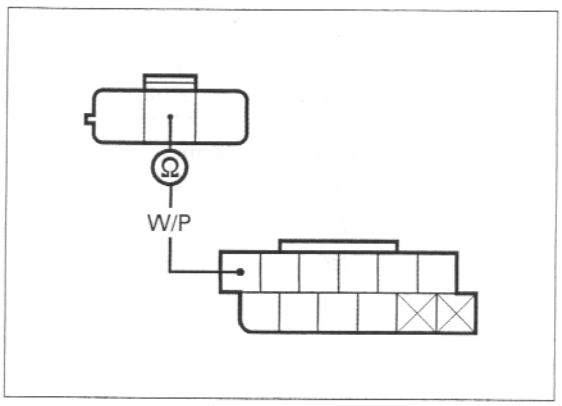

7. **Modulator Inspection by Replacing the Front and Rear Modulators**

Connect the ABS control unit 5P (Black) connector.

Remove the front and rear modulators and interchange them.

Connect the rear modulator 3P (Gray) and 2P connectors to the rear modulator.

Connect the front modulator 3P (Gray) and 2P connectors to the front modulator.

Perform the pre-start self-diagnosis, retrieve the problem code and record it.

Is any problem code indicated?

6 blinks–Faulty rear ABS modulator.

7 blinks–faulty ABS control unit.

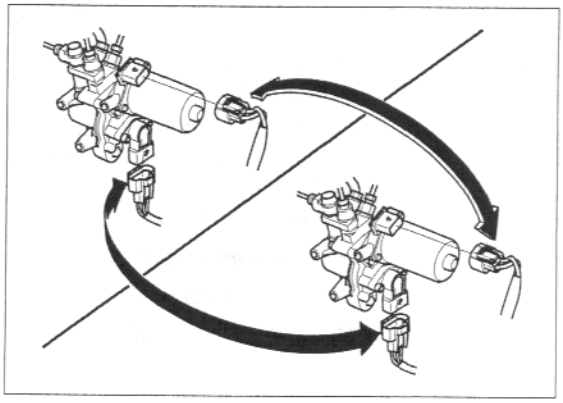

8. **Wire Harness Short Circuit Inspection for Rear Modulator**

Disconnect the ABS control unit 5P (Black) connector.

Check for continuity between the rear ABS modulator 3P (Light gray) wire harness side connector terminal and ground.

Connection: Orange/blue - ground
Pink/white - ground

Is there continuity?

YES – Short circuit in wire harness between the rear ABS modulator and the ABS control unit.

NO – GO TO STEP 9.

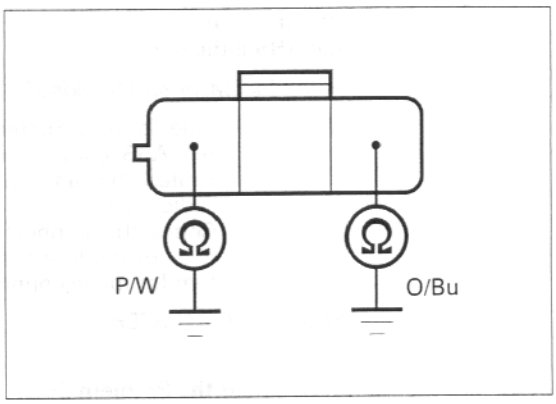

9. **Wire Harness Continuity Inspection**

Check for continuity between the front ABS modulator 3P (Light gray) wire harness side connector terminals and the ABS control unit 5P (Black) wire harness side connector terminals.

Connection: Orange/blue - Orange/blue
Pink/white - Pink/white

Is there continuity?

YES – Faulty ABS control unit.

NO – Open circuit in wire harness between the front ABS modulator and the ABS control unit.

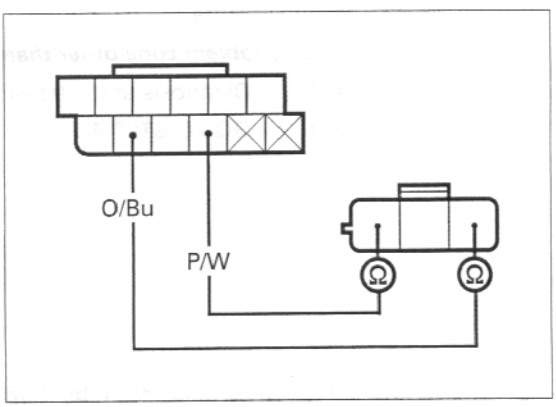

Problem code 10: ABS control unit (front relay circuit)

1. **ABS Indicator Checking**

The ABS indicator blinks or come on and stays on when the ABS control unit has been disrupted by an extremely powerful radio wave (electromagnetic interfere). This is just a temporary symptom. Erase the problem code and the ABS control unit is normal unless the symptom occurs again.

Turn the ignition switch to "ON" and check the ABS indicator.

Is the indicator still blinking?

YES – GO TO STEP 2.

NO – GO TO STEP 3.

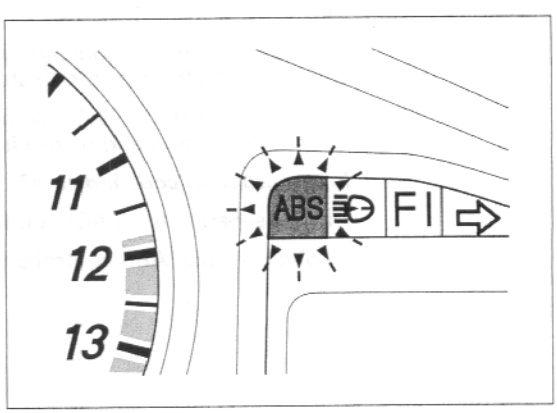

2. **ABS Indicator Function Rechecking**

Retrieve the problem code and erase it.

Perform the pre-start self-diagnosis and check the ABS indicator.

Is the indicator still blinking?

NO – • Fine foreign matter in modulator or the ABS control unit has been disrupted by an extremely powerful radio wave.
• Check the connector and wire harness of the wheel speed sensor system for loose connection.

YES – GO TO STEP 3.

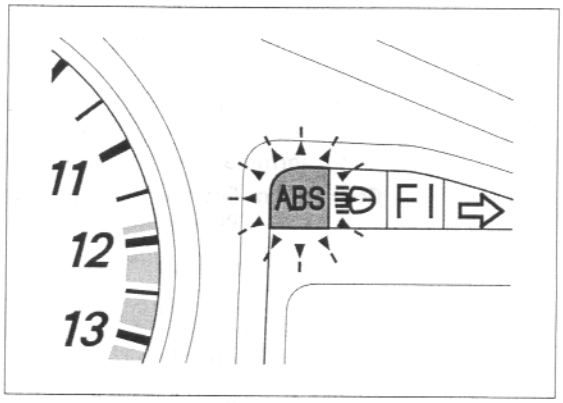

3. **Rechecking the Problem Code**

Retrieve the problem code and record the latest problem code.

Is the problem code other than 10 blinks?

YES – Diagnosis at the latest problem code.

NO – GO TO STEP 4.

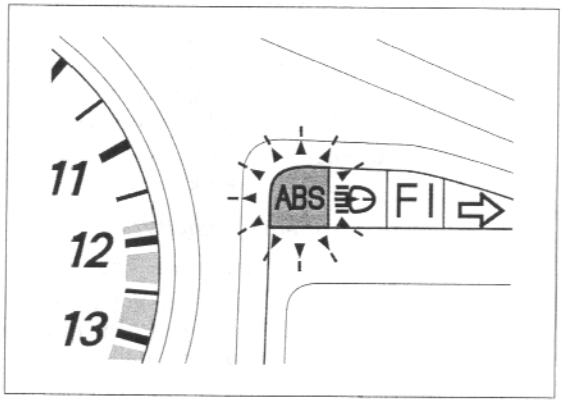

4. **Modulator Inspection by Replacing the Front and Rear Modulators**

Connect the front ABS control unit 3P (Light gray) and 2P connectors to the rear ABS modulator.

Connect the rear modulator 3P (Gray) and 2P connectors to the rear modulator.

Perform the pre-start self-diagnosis and retrieve the problem code, and record it.

Is any problem code indicate?

11 blinks–Faulty front ABS modulator.

10 blinks–Faulty ABS control unit.

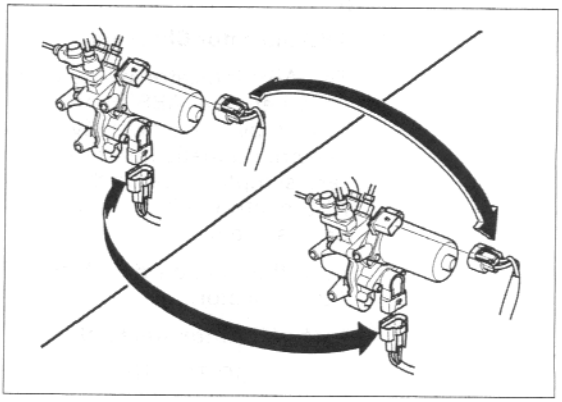

Problem code 11: ABS control unit (rear relay circuit)

1. **ABS Indicator Checking**

   The ABS indicator blinks or come on and stays on when the ABS control unit has been disrupted by an extremely powerful radio wave (electromagnetic interfere). This is just a temporary symptom. Erase the problem code and the ABS control unit is normal unless the symptom occurs again.

   Turn the ignition switch to "ON" and check the ABS indicator.

   Is the indicator still blinking?

   YES – GO TO STEP 2.

   NO – GO TO STEP 3.

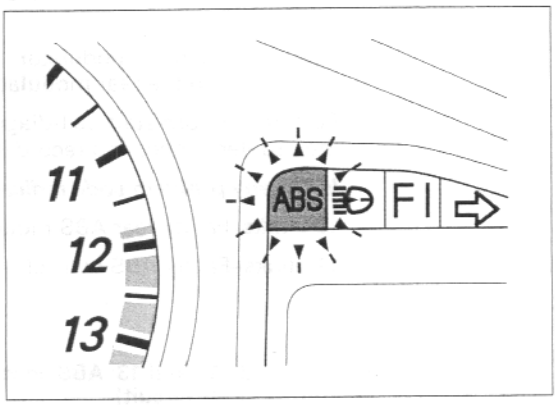

2. **ABS Indicator Function Rechecking**

   Retrieve the problem code and erase it.

   Perform the pre-start self-diagnosis and check the ABS indicator.

   Is the indicator still blinking?

   NO – • Fine foreign matter in modulator or the ABS control unit has been disrupted by an extremely powerful radio wave.
   • Check the connector and wire harness of the wheel speed sensor system for loose connection.

   YES – GO TO STEP 3.

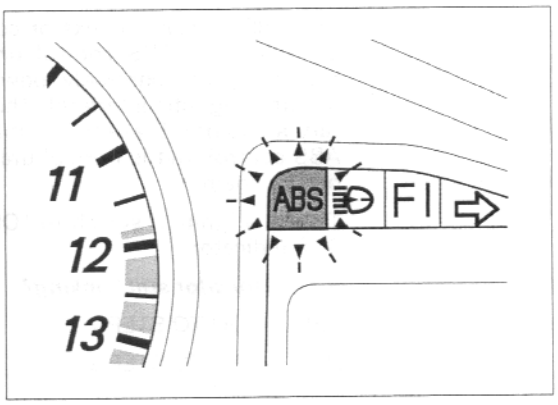

3. **Rechecking the Problem Code**

   Retrieve the problem code and record the latest problem code.

   Is the problem code other than 11 blinks?

   YES – Diagnosis at the latest problem code

   NO – GO TO STEP 4.

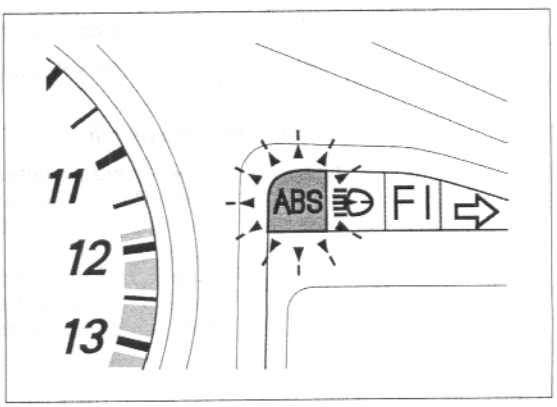

4. Modulator Inspection by Replacing the Front and Rear Modulators

Connect the front ABS control unit 3P (Light gray) and 2P connectors to the rear ABS modulator.

Connect the rear modulator 3P (Gray) and 2P connectors to the rear modulator.

Perform the pre-start self-diagnosis and retrieve the problem code, and record it.

Is the any problem code indicate?

10 blinks–Faulty rear ABS modulator.

11 blinks–Faulty ABS control unit.

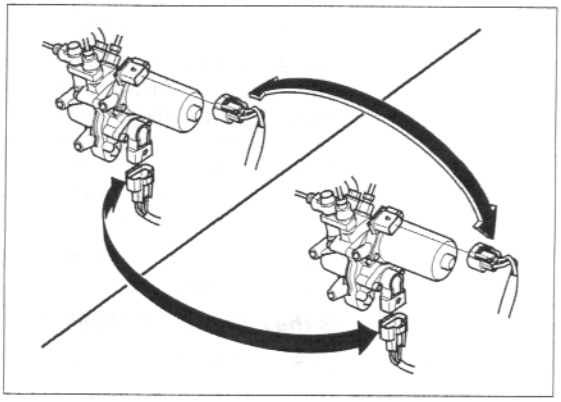

Problem code 12 and 13: ABS control unit (front and rear motor drive circuit)

1. ABS Indicator Checking

The ABS indicator blinks or come on and stays on when the ABS control unit has been disrupted by an extremely powerful radio wave (electromagnetic interfere). This is just a temporary symptom. Erase the problem code and the ABS control unit is normal unless the symptom occurs again.

Turn the ignition switch to "ON" and check the ABS indicator.

Is the indicator still blinking?

YES – GO TO STEP 2.

NO – GO TO STEP 3.

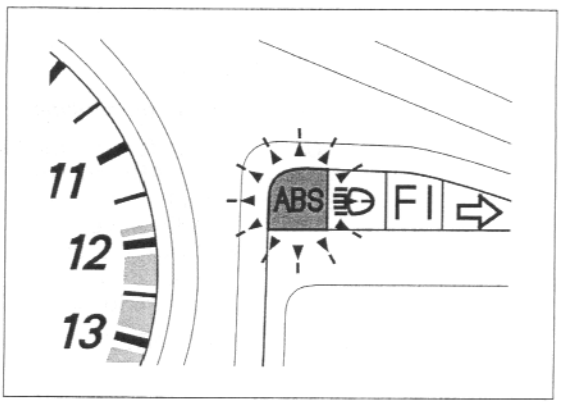

2. ABS Indicator Function Rechecking

Retrieve the problem code and erase it.

Perform the pre-start self-diagnosis and check the ABS indicator.

Is the indicator still blinking?

NO – • Fine foreign matter in modulator or the ABS control unit has been disrupted by an extremely powerful radio wave.
• Check the connector and wire harness of the wheel speed sensor system for loose connection.

YES – GO TO STEP 3.

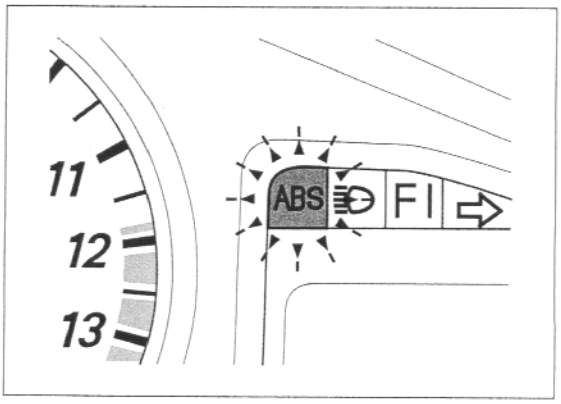

3. **Rechecking the Problem Code**

Retrieve the problem code and record the latest problem code.

Is the problem code other than 12, 13 blinking?

YES – Diagnosis at the latest problem code.

NO – Faulty ABS control unit.

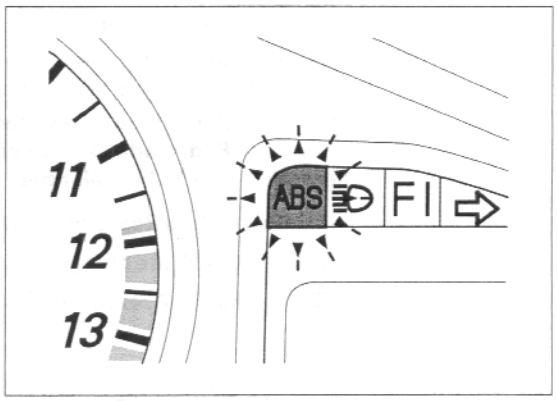

Problem code 14: Power circuit inspection

1. **Battery Charging System Inspection**

- Ask the rider about the following when the motorcycle is brought in for inspection. This problem code will light up to indicate battery discharge.
  - Ask whether the motorcycle has been run with large capacity electric load accessories.
  - Ask whether the motorcycle has been left for long time with the ignition switch turned to "ON" (after the pre-start self-diagnosis).
- Check to see whether the indicated idle speed matches the specified idle speed.
- Before troubleshooting check for following:
  - Front and rear ABS fuse 20A condition.
  - Short or open circuit in wire harness between the fuse box and ABS control unit.

Is the charging system OK?

NO – Check the charging system.

YES – GO TO STEP 2.

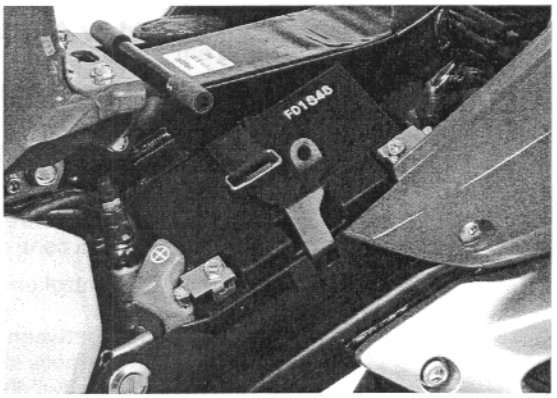

2. **ABS Indicator Function Rechecking**

Retrieve the problem code and erase it.

Perform the pre-start self-diagnosis and check the ABS indicator.

Is the indicator still blinking?

NO – • Fine foreign matter in modulator or the ABS control unit has been disrupted by an extremely powerful radio wave.
• Check the connector and wire harness of the wheel speed sensor system for loose connection.

YES – Blinks (GO TO STEP 4.), Stay on (GO TO STEP 3.)

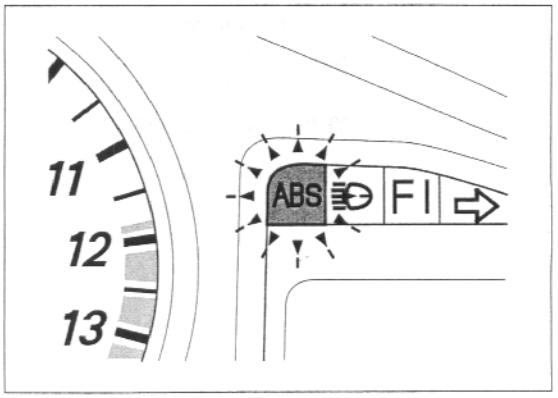

3. **Input Voltage Inspection**

Disconnect the ABS control unit 5P (Black) and 5P (Brown) connectors.

Measure the voltage between the ABS control unit 5P wire harness side connector terminals.

Connection: Black/blue (+) - Green (-)
Red/white (+) - Green (-)
Standard: 10 - 17 V at all time

Is the voltage within standard value?

NO – Check the charging system (page 17-8).

YES – Faulty ABS control unit.

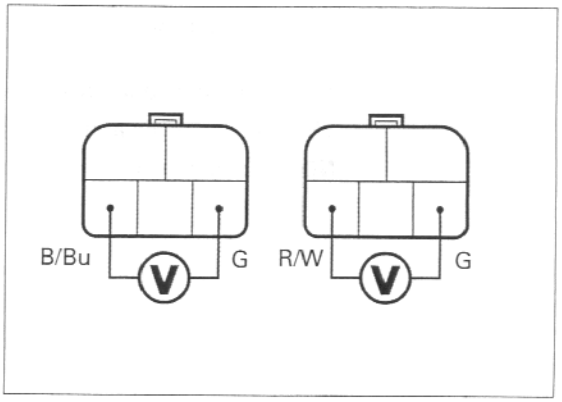

4. **Recheck Voltage After Replacing the New Battery**

Retrieve the problem code and verify that the problem code is "14". Erase the problem code.

Replace the battery with a new fully charged battery.

Perform the pre-start self-diagnosis and check the ABS indicator.

Is the indicator still blinking?

YES – Faulty ABS control unit.

NO – Faulty removed battery.

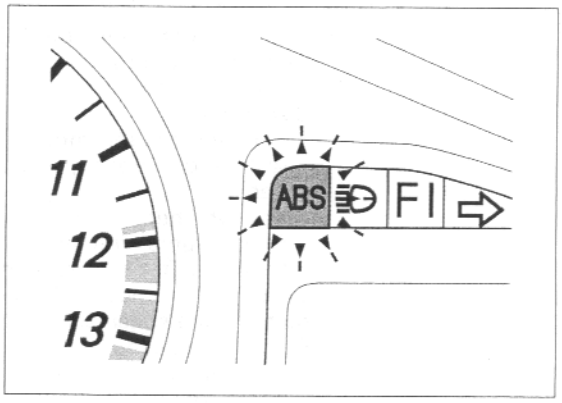

Problems not detected by ABS control unit (ABS indicator stays on)

1. **Input Voltage Line Inspection at ABS Control Unit**

Before troubleshooting, check for the follow

- ABS fuse 10A condition.
- Short or open circuit in wire harness between the fuse box and ABS control unit.

Disconnect the ABS control unit 5P (Brown) connector.
Measure the voltage between the ABS control unit 5P (Brown) wire harness side connector and ground with the ignition switch turned to "ON".

Connection: Red/brown (+) - ground (-)

Is there voltage?

NO – Open circuit in wire harness between the fuse box and ABS control unit.

YES – GO TO STEP 2.

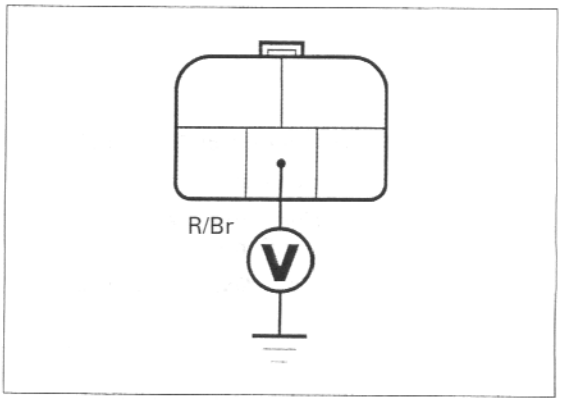

2. **ABS Indicator Output Voltage**

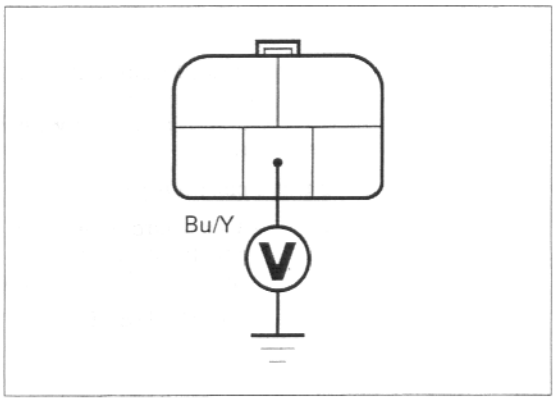

Connect the ABS control unit 5P (Brown) connector.

Disconnect the ABS control unit 5P (Black) connector.

Measure the voltage between the ABS control unit 5P (Black) wire harness side connector terminal and ground. with the ignition switch turned to "ON".

Connection: Blue/yellow (+) - ground (-)
Standard: 1 - 3 V

Is the voltage within standard value?

NO – Open circuit in wire harness between the combination meter (ABS indicator) and ABS control unit.

YES – GO TO STEP 3.

3. **Short Circuit Inspection in Wheel Speed Sensor Input Signal Line**

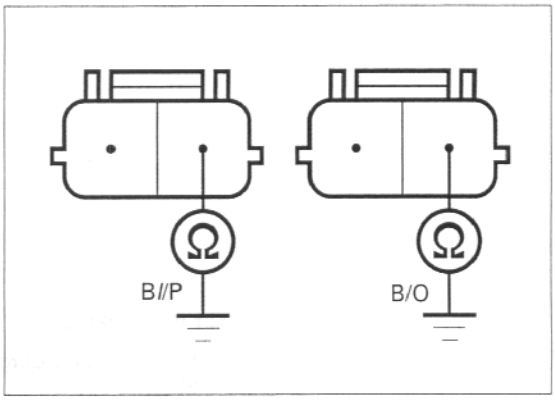

Connect the ABS control unit 5P (Black) connector.

Disconnect the front and rear wheel speed sensor 2P connectors.

Measure the voltage between each wheel speed sensor 2P connector wire harness side connector terminal and ground.

Connection: Black/pink - ground
Black/orange - ground

Is there continuity?

YES – Short circuit in wire harness between the front and/or rear wheel speed sensor and ABS control unit.

NO – GO TO STEP 5.

4. Wire Harness Continuity Inspection

Disconnect the front and rear wheel speed sensor 2P connectors.

Check for continuity between each wheel speed sensor 2P connector wire harness side and ABS control unit 12P (Black) wire harness connector terminals.

Is there continuity?

NO – Open circuit in wire harness between the front and/or rear wheel speed sensor and ABS control unit.

YES – GO TO STEP 5.

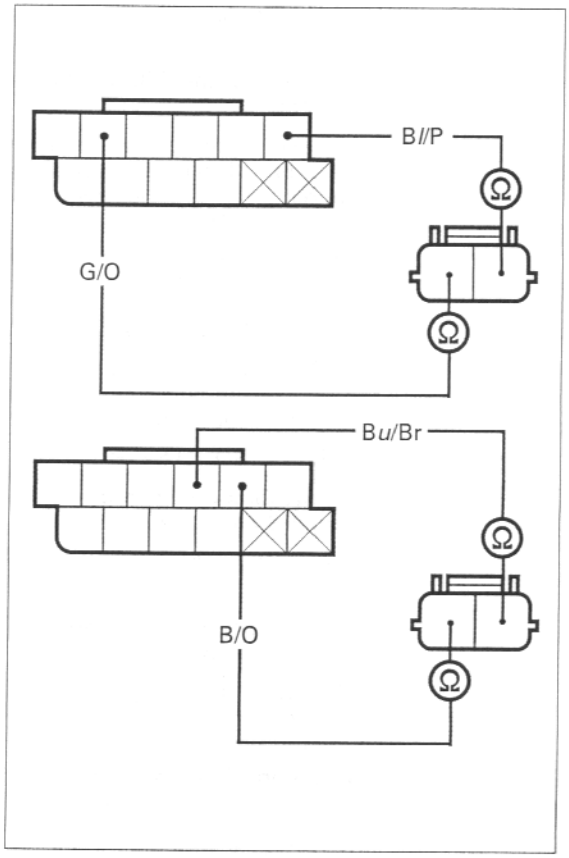

5. ABS Indicator Rechecking

Perform the pre-start self-diagnosis and check the ABS indicator

Is the indicator goes off?

YES – • Fine foreign matter in modulator or the ABS control unit has been disrupted by an extremely powerful radio wave.
• Check the connector and wire harness of the speed sensor system for loose connection.

NO – Faulty ABS control unit.

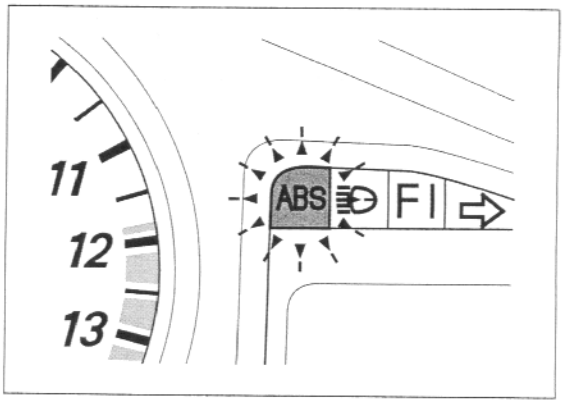

WHEEL SPEED SENSOR

AIR GAP INSPECTION

Measure the clearance (air gap) between the sensor and pulser ring at several points by turning the wheel slowly.
It must be within specification.

STANDARD: Front/rear: 0.4 - 1.2 mm (0.02 - 0.05 in)

The sensor air gap cannot be adjusted.
If it is not within specification, check each installation part for deformation, looseness and damage.

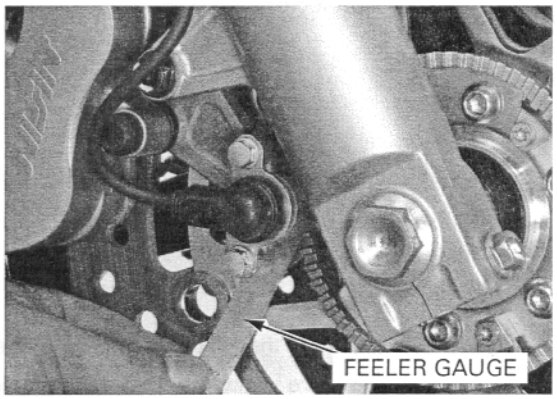

REPLACEMENT

Front sensor

Remove the side cowl (page 2-8).

Disconnect the sensor 2P (Orange) connector.

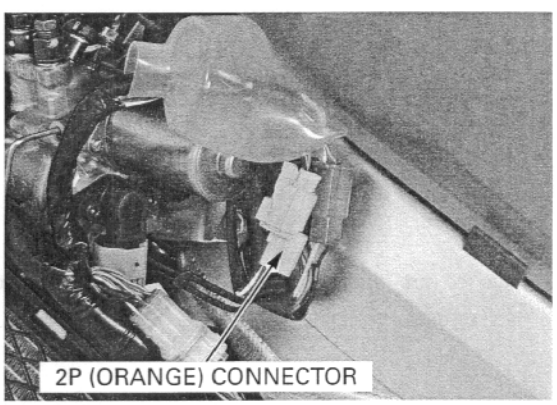

Remove the two bolts, clamp and speed sensor.

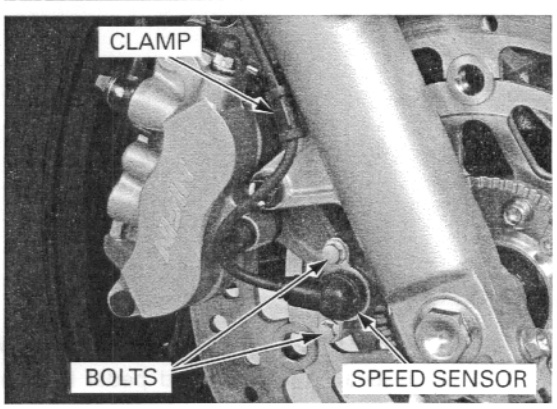

Route the wire properly (page 1-25).

Installation is in the reverse order of removal.

After installation, check the air gap (page 16-31).

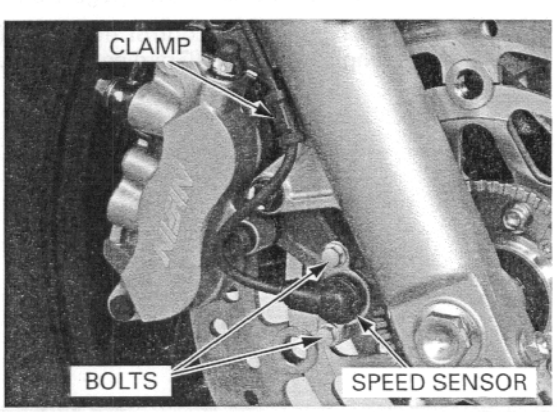

Rear sensor

Remove the right seat rail cover (page 15-8).

Disconnect the rear wheel speed sensor 2P (Gray) connector.

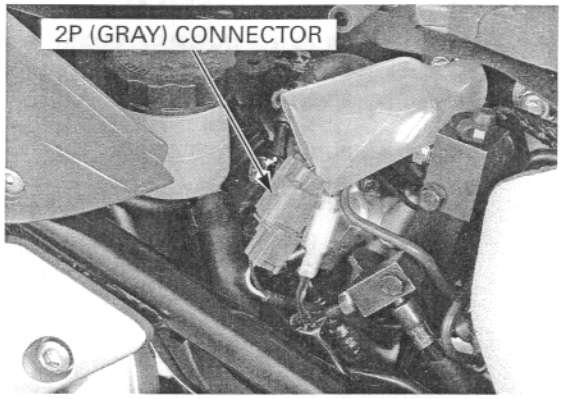

Remove the drive chain case (page 14-7).

Remove the two bolts and the speed sensor.

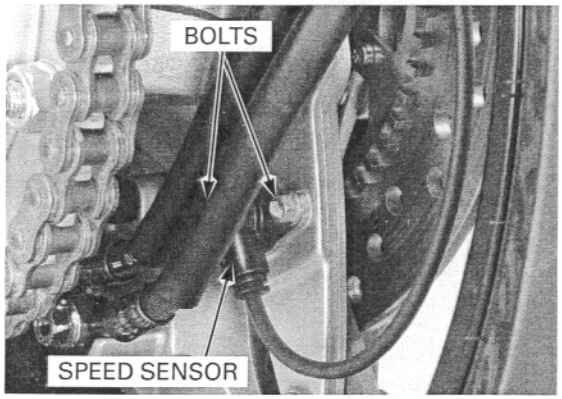

Route the wire properly (page 1-25).

Installation is in the reverse order of removal.

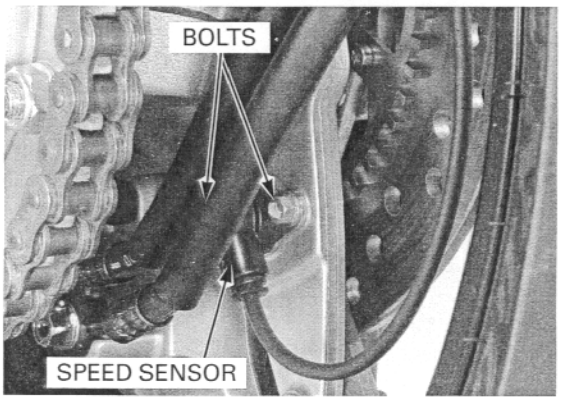

ABS MODULATOR

FRONT MODULATOR REMOVAL

Drain the lever and pedal hydraulic system (page 15-7).

Remove the side cowl (page 2-8).

Disconnect the control motor 2P (Black) and crank angle sensor 3P (Gray) connectors.

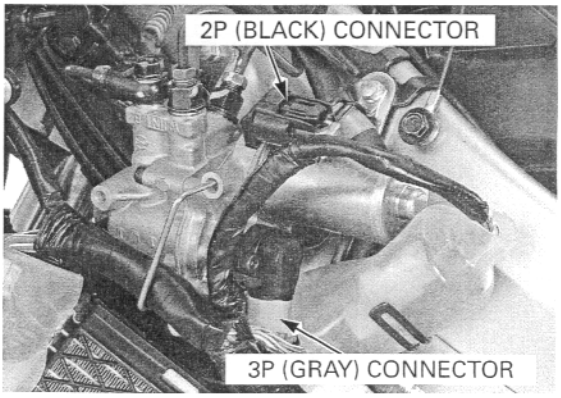

Remove the bolt and wire harness guide from the front modulator body.

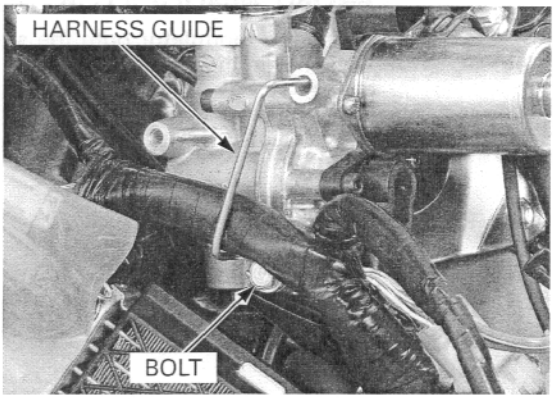

Loosen the oil hose joint nuts, then disconnect the brake pipe from the front modulator.
Remove the oil hose bolts and brake hoses from the front modulator.

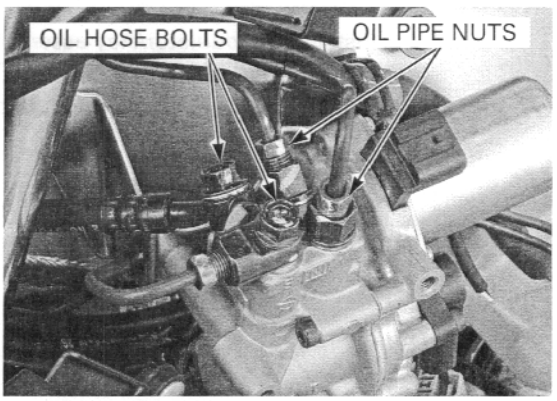

Remove the modulator stay mounting bolts and modulator/stay assembly from the frame.

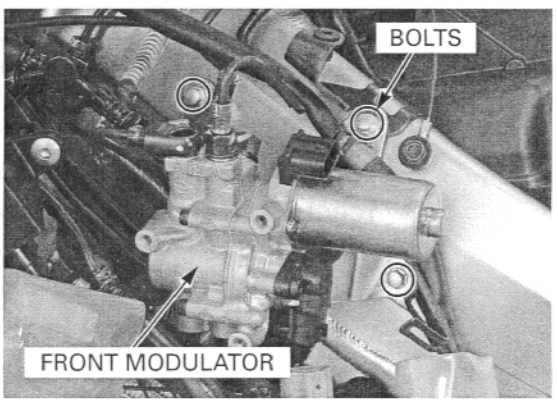

Remove the three bolts and modulator stay from the modulator.

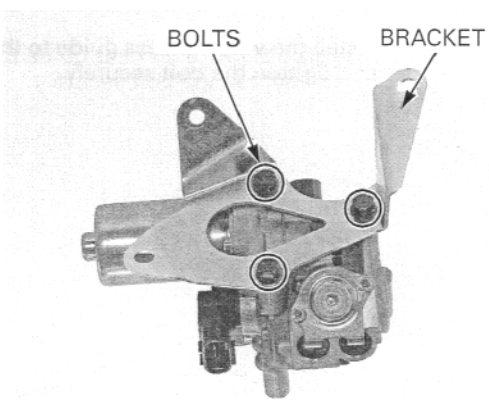

FRONT MODULATOR INSTALLATION

Install the modulator onto the stay and tighten the three mounting bolts.

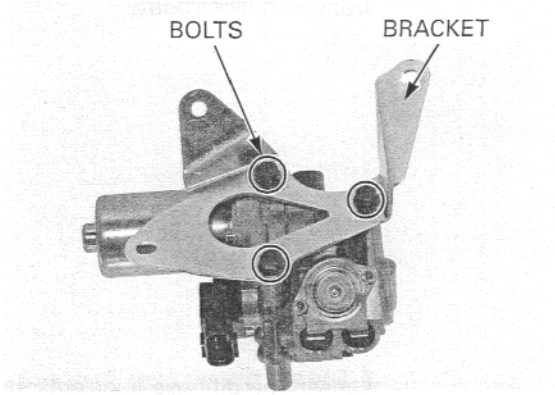

Install the modulator/stay assembly onto the frame, being careful not to interfere with the brake pipes.

Install and tighten the modulator stay mounting bolts.

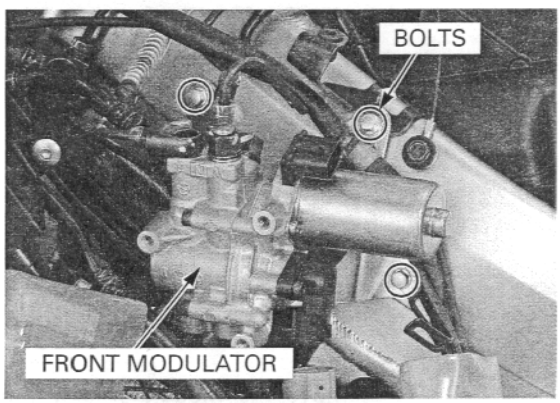

Set the brake pipes into the modulator ports and make sure that the paint color on the brake pipes are aligned with the marks on the modulators.
Apply brake fluid to the joint nut threads on the brake pipes.
Tighten the joint nuts to the specified torque.

TORQUE: 17 N·m (1.7 kgf·m, 12 lbf·ft)

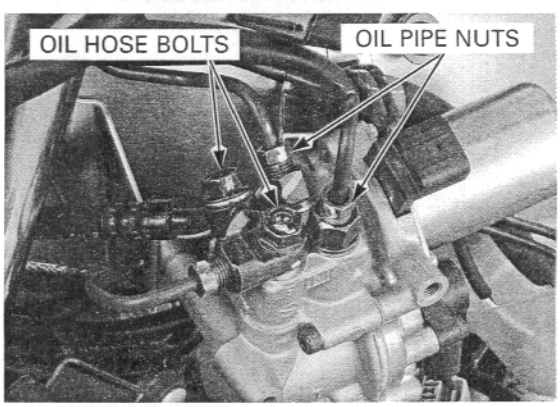

Install the wire harness guide to the front modulator and tighten the bolt securely.

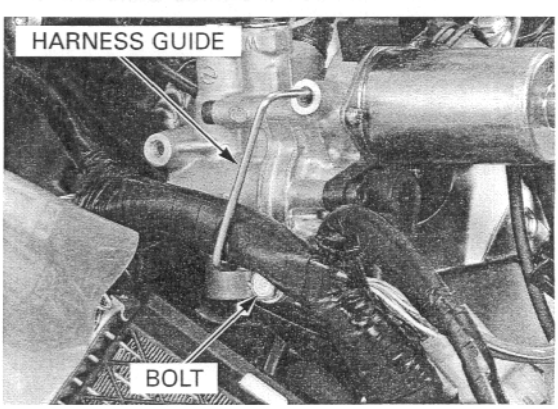

Connect the control motor 2P (Black) and crank angle sensor 3P (Gray) connectors.

Fill and bleed the lever and pedal brake hydraulic system (page 15-7).

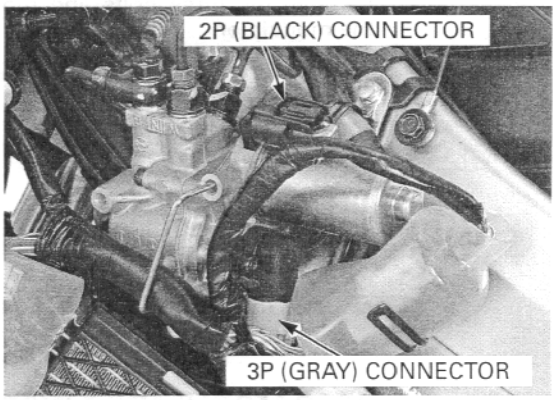

REAR MODULATOR REMOVAL

Drain the lever and pedal hydraulic system (page 15-7).

Remove the following:

- Rear cowl (page 2-5)
- Rear fender (page 2-17)

Disconnect the control motor 2P (Black) and crank angle sensor 3P (Gray) connectors.

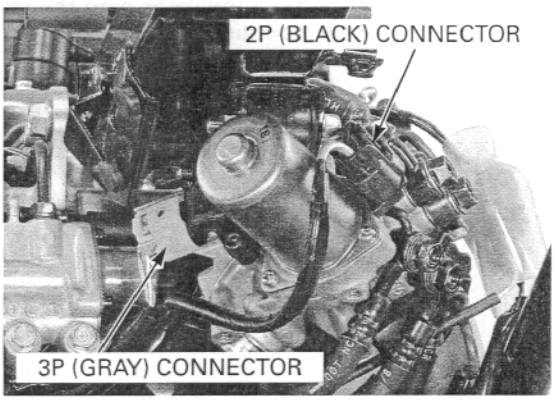

Remove the oil hose bolts and brake hoses from the rear modulator.

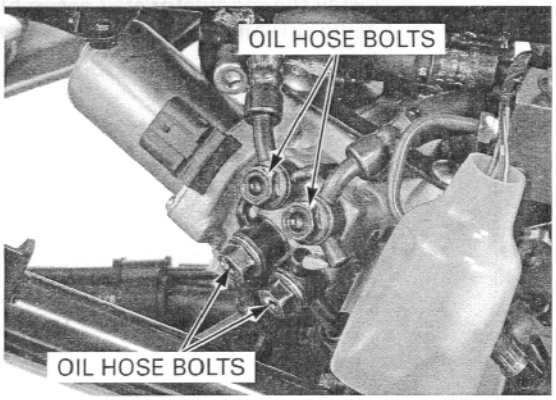

Remove the rear modulator stay mounting bolts, then remove the rear modulator assembly.

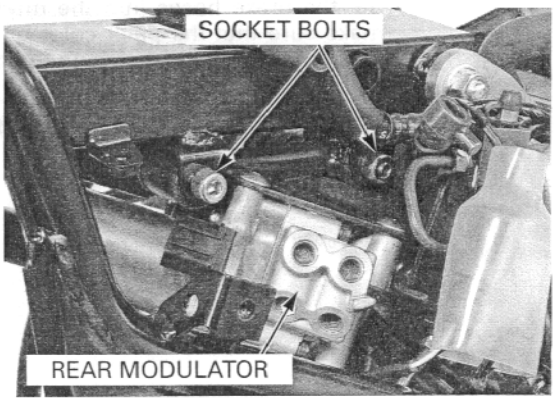

Remove the three bolts and modulator stay from the modulator.

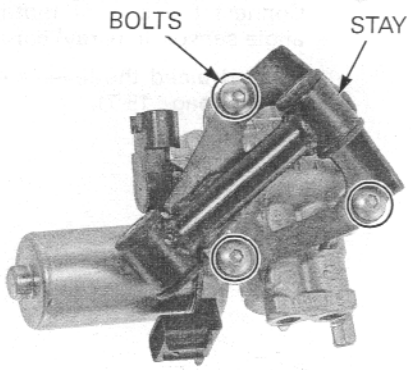

REAR MODULATOR INSTALLATION

Install the modulator onto the stay and tighten the three mounting bolts.

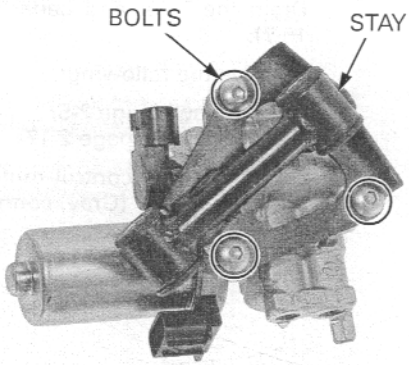

Install the modulator/stay assembly onto the frame, being careful not to interfere with the brake pipes.

Install and tighten the modulator stay mounting bolts.

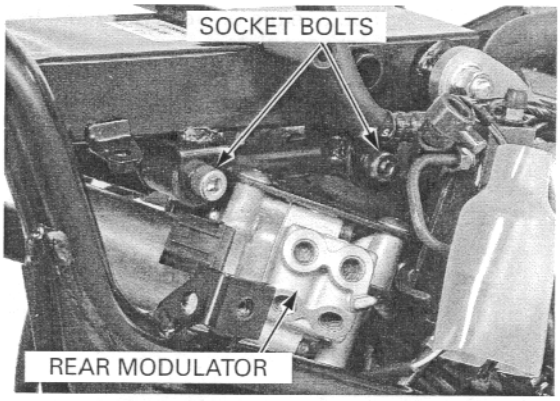

Set the brake hoses into the modulator ports and make sure that the paint color on the brake hoses are aligned with the marks on the modulators. Tighten the brake hose bolts to the specified torque.

TORQUE: 34 N·m (3.5 kgf·m, 25 lbf·ft)

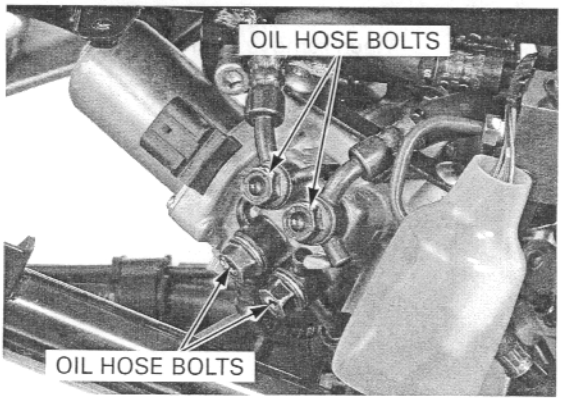

Connect the control motor 2P (Black) and crank angle sensor 3P (Gray) connectors.

Fill and bleed the lever and pedal brake hydraulic system (page 15-7).

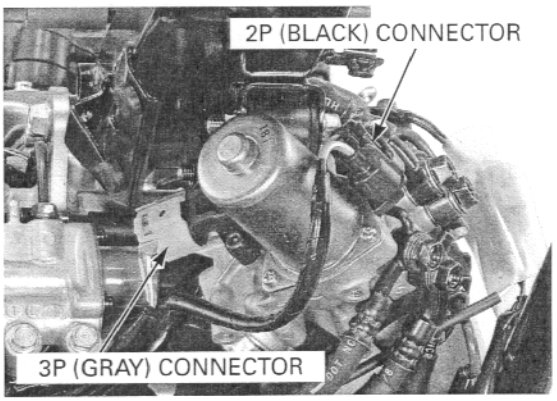

ABS CONTROL UNIT

REMOVAL/INSTALLTION

Remove the upper cowl (page 2-12).

Remove the ABS control unit cover screw and cover.

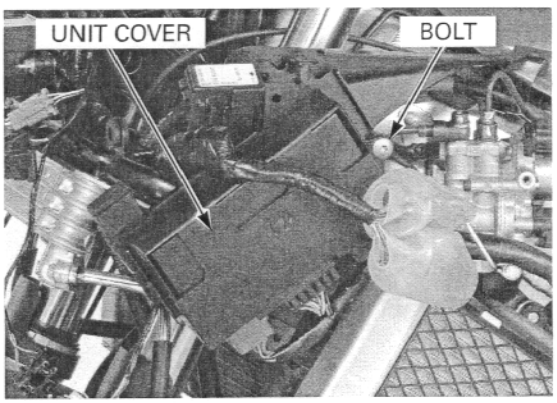

Remove the control unit from the bracket.
Remove the cover from the control unit.

Disconnect the ABS control unit 10P (Black), 5P (Black) and 5P (Brown) connectors.

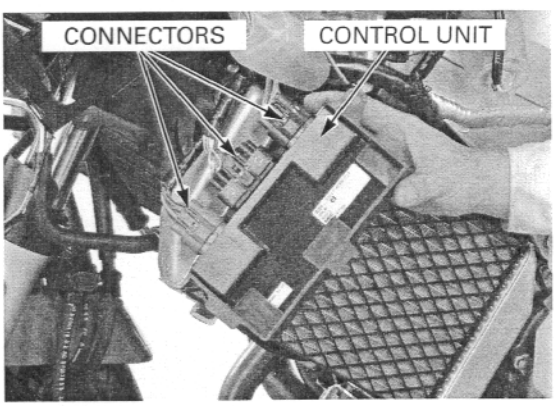

Installation is in the reverse order of removal.

Align the ABS control unit cover tab with the slit in the bracket.

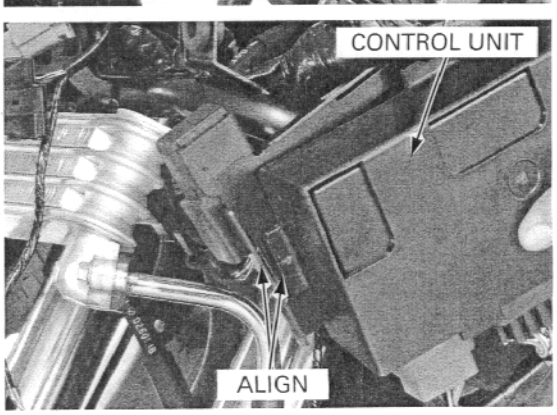

MEMO

17. BATTERY/CHARGING SYSTEM

SYSTEM LOCATION 17-2

SYSTEM DIAGRAM 17-2

SERVICE INFORMATION 17-3

TROUBLESHOOTING 17-5

BATTERY 17-6

CHARGING SYSTEM INSPECTION 17-8

ALTERNATOR CHARGING COIL 17-9

ALTERNATOR COVER REMOVAL 17-10

STATOR 17-10

FLYWHEEL 17-11

ALTERNATOR COVER INSTALLATION 17-12

REGULATOR/RECTIFIER 17-13

SYSTEM LOCATION

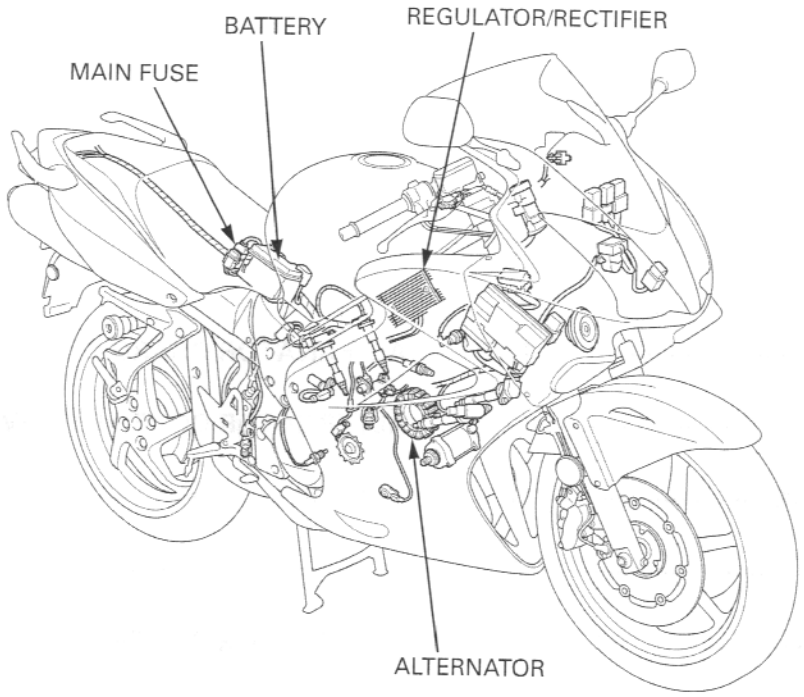

SYSTEM DIAGRAM

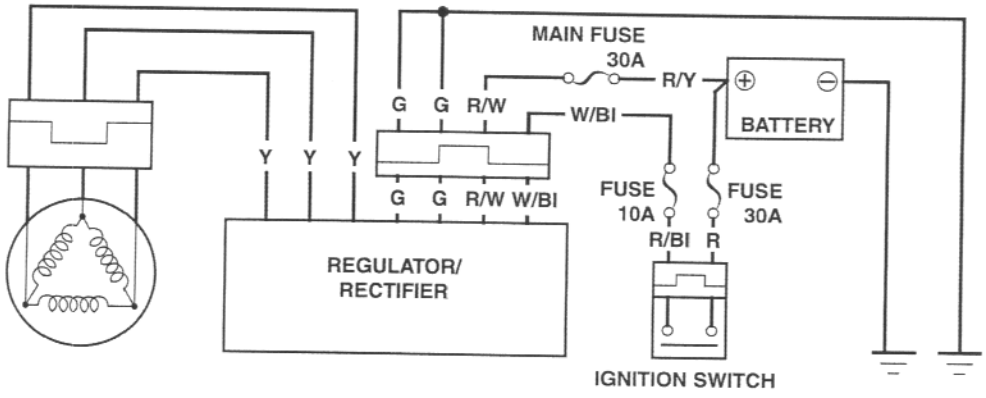

SERVICE INFORMATION

GENERAL

⚠WARNING

- The battery gives off explosive gases; keep sparks, flames and cigarettes away. Provide adequate ventilation when charging.
- The battery contains sulfuric acid (electrolyte). Contact with skin or eyes may cause severe burns. Wear protective clothing and a face shield.
  - If electrolyte gets on your skin, flush with water.
  - If electrolyte gets in your eyes, flush with water for at least 15 minutes and call a physician immediately.
- Electrolyte is poisonous.
  - If swallowed, drink large quantities of water or milk and call your local Poison Control Center or a call a physician immediately.

- Always turn OFF the ignition switch before disconnecting any electrical component.
- Some electrical components may be damaged if terminals or connectors are connected or disconnected while the ignition switch is ON and current is present.
- For extended storage, remove the battery, give it a full charge, and store it in a cool, dry space. For maximum service life, charge the stored battery every two weeks.
- For a battery remaining in a stored motorcycle, disconnect the negative battery cable from the battery terminal.
- The maintenance free battery must be replaced when it reaches the end of its service life.
- The battery can be damaged if overcharged or undercharged, or if left to discharge for long period. These same conditions contribute to shortening the "life span" of the battery. Even under normal use, the performance of the battery deteriorates after 2–3 years.
- Battery voltage may recover after battery charging, but under heavy load, battery voltage will drop quickly and eventually die out. For this reason, the charging system is often suspected as the problem. Battery overcharge often results from problems in the battery itself, which may appear to be an overcharging symptom. If one of the battery cells is shorted and battery voltage does not increase, the regulator/rectifier supplies excess voltage to the battery. Under these conditions, the electrolyte level goes down quickly.
- Before troubleshooting the charging system, check for proper use and maintenance of the battery. Check if the battery is frequently under heavy load, such as having the headlight and taillight on for long periods of time without riding the motorcycle.
- The battery will self-discharge when the motorcycle is not in use. For this reason, charge the battery every two weeks to prevent sulfation from occurring.
- When checking the charging system, always follow the steps in the troubleshooting flow chart (page 17-5).
- For battery charging, do not exceed the charging current and time specified on the battery. Use of excessive current or charging time may damage the battery.

BATTERY TESTING

Refer to the instruction of the Operation Manual for the recommended battery tester. The recommended battery tester puts a "load" on the battery so that the actual battery condition during load can be measured.

Recommended battery tester **BM210-AH (U.S.A. only), BM-210 or BATTERY MATE or equivalent**

SPECIFICATIONS

ITEM			SPECIFICATIONS
Battery	Capacity		12V – 10Ah
	Current leakage		2.5 mA max.
	Voltage (20°C/68°F)	Fully charged	13.0 – 13.2 V
		Needs charging	Below 12.3 V
	Charging current	Normal	0.9 A/5 – 10 h
		Quick	4.5 A/0.5 h
Alternator	Capacity		0.47 kW/5,000 rpm
	Charging coil resistance (20°C/68°F)		0.1 – 1.0 Ω

TORQUE VALUES

Flywheel flange bolt	103 N·m (10.5 kgf·m, 76 lbf·ft)	Apply oil to the threads
Alternator stator torx bolt	12 N·m (1.2 kgf·m, 9 lbf·ft)	
Stator wire socket bolt	12 N·m (1.2 kgf·m, 9 lbf·ft)	
Engine oil filter cartridge	26 N·m (2.7 kgf·m, 20 lbf·ft)	Apply clean engine oil to the O-ring
Engine oil drain bolt	29 N·m (3.0 kgf·m, 22 lbf·ft)	

TOOLS

Flywheel holder	07725-0040000	Equivalent commercially available in U.S.A
Rotor puller	07703-0020001	or 7933-3950000

TROUBLESHOOTING

BATTERY IS DAMAGED OR WEAK

1. **BATTERY TEST**

   Remove the battery page 17-6

   Check the battery condition using the recommended battery tester.

   RECOMMENDED BATTERY TESTER:
   BM210 or BATTERY MATE or equivalent

   Is the battery in good condition?

   No – Faulty battery.

   YES – GO TO STEP 2.

2. **CURRENT LEAKAGE TEST**

   Install the battery page 17-6.

   Check the battery current leakage test (Leak test; page 17-8).

   Is the current leakage below 2.5 mA?

   YES – GO TO STEP 4.

   NO – GO TO STEP 3.

3. **CURRENT LEAKAGE TEST WITHOUT REGULATOR/RECTIFIER CONNECTOR**

   Disconnect the regulator/rectifier connector and recheck the battery current leakage.

   Is the current leakage below 2.5 mA?

   YES – Faulty regulator/rectifier.

   NO – • Shorted wire harness.
   • Faulty ignition switch.

4. **ALTERNATOR CHARGING COIL INSPECTION**

   Check the alternator charging coil (page 17-9).

   Is the alternator charging coil resistance within 0.1 – 1.0 Ω (20 °C/68 °F)?

   No – Faulty charging coil.

   YES – GO TO STEP 5.

5. **CHARGING VOLTAGE INSPECTION**

   Measure and record the battery voltage using a digital multimeter (page 17-6).

   Start the engine.

   Measure the charging voltage (page 17-9).

   Compare the measurement to result of the following calculation.

   STANDARD:
   Measured battery Voltage < Measured charging voltage < 15.5 V

   Is the measured charging voltage within the standard voltage?

   YES – Faulty battery.

   NO – GO TO STEP 6.

6. **REGULATOR/RECTIFIER SYSTEM INSPECTION**

   Check the voltage and resistance at the regulator/rectifier connector (page 17-13).

   Are the results of checked voltage and resistance correct?

   YES – Faulty regulator/rectifier.

   NO – • Open circuit in related wire.
   • Loose or poor contacts of related terminal.
   • Shorted wire harness.

BATTERY

REMOVAL/INSTALLATION

Always turn the ignition switch OFF before removing the battery.

Remove the seat (page 2-5).

Remove the battery cover by releasing the two trim clips.

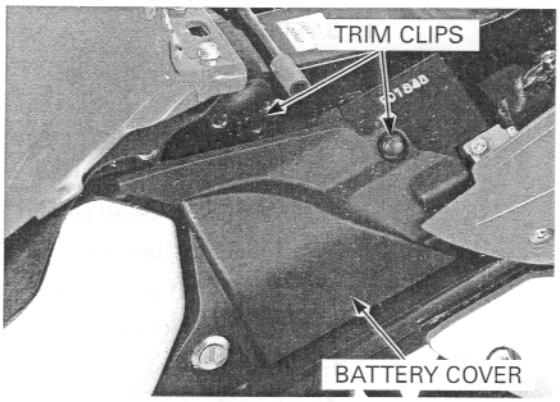

Remove the battery holder band and holder bracket.

Disconnect the negative cable and then the positive cable, and remove the battery.

Connect the positive terminal first and then the negative cable.

Install the battery in the reverse order of removal with the proper wiring as shown.

After installing the battery, coat the terminals with clean grease.

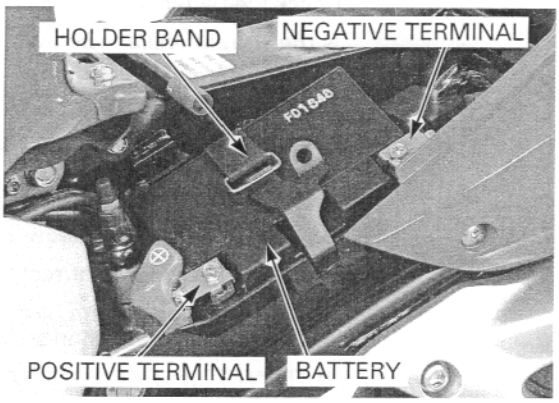

VOLTAGE INSPECTION

Measure the battery voltage using a digital multimeter.

VOLTAGE:

Fully charged: 13.0 – 13.2V
Under charged: Below 12.3V

TOOL:

Digital multimeter — **Commercially available in U.S.A.**

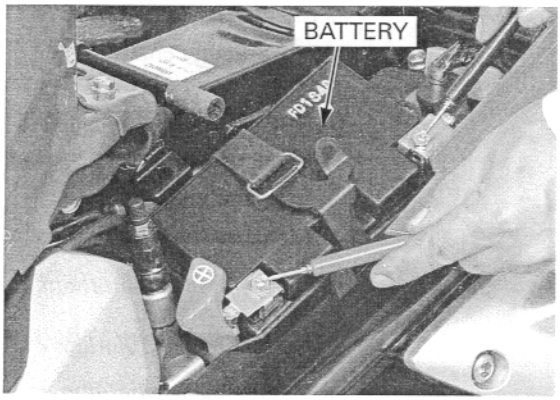

BATTERY TESTING

Always clear the work area of flammable materials such as gasoline, brake fluid, electrolyte, or cloth towels when operating the tester. The heat generated by the tester may cause a fire.

Remove the battery (page 17-6).

Securely connect the tester's positive (+) cable first, then connect the negative (-) cable.

TOOL:

Battery tester — **BM-210 (U.S.A. only), BM210 or BATTERY MATE or equivalent**

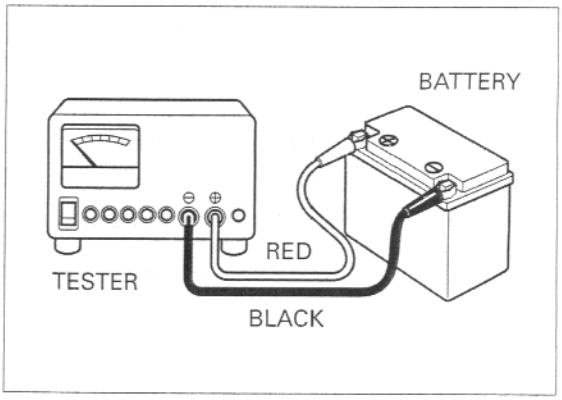

For accurate test results, be sure the tester's cables and clamps are in good condition and that a secure connection can be made at the battery.

Set the temperature switch to "HIGH" or "LOW" depending on the ambient temperature.

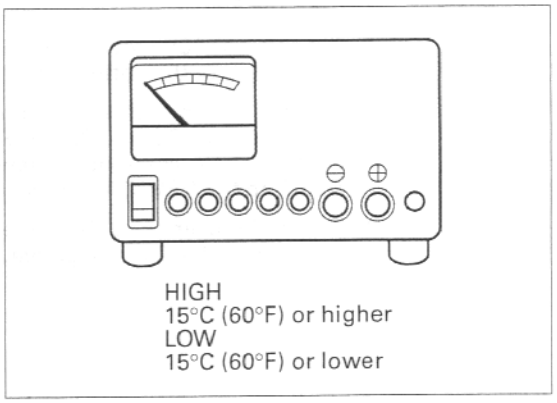

For the first check, DO NOT charge the battery before testing; test it in an "as is" condition.

Push in the appropriate test button for 3 seconds and read the condition of the battery on the meter.

To avoid damaging the tester, only test batteries with an amperage rating of less than 30 Ah.
Tester damage can result from overheating when:

- The test button is pushed in for more than 3 seconds.
- The tester is used without being allowed to cool for at least 1 minute when testing more than one battery.
- More than 10 consecutive tests are performed without allowing at least a 30-minute cool-down period.

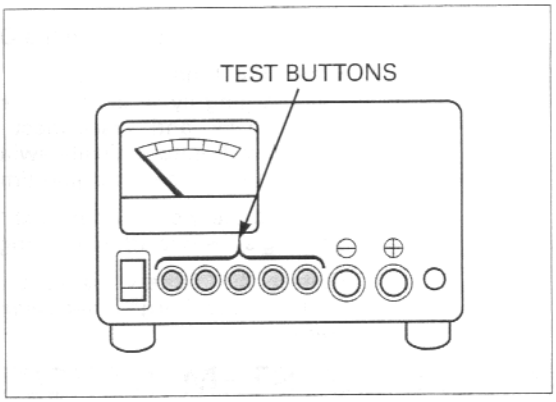

The result of a test on the meter scale is relative to the amp hour rating of the battery. ANY BATTERY READING IN THE GREEN ZONE IS OK. Batteries should only be charged if they register in the YELLOW or RED zone.

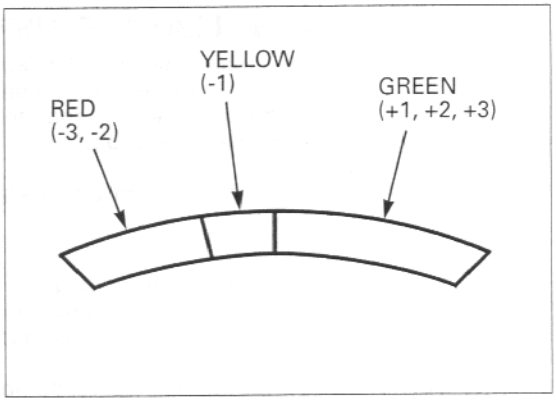

BATTERY CHARGING

Remove the battery (page 17-6).

- Clean the battery terminals and position the battery as far away from the charger as the leads will permit.
- Do not place batteries below the charger, gases from the battery may corrode and damage the charger.
- Do not place batteries on top of the charger. Be sure the air vents are not blocked.

TOOL:
Christie battery charger MC1012/2 (U.S.A. only)

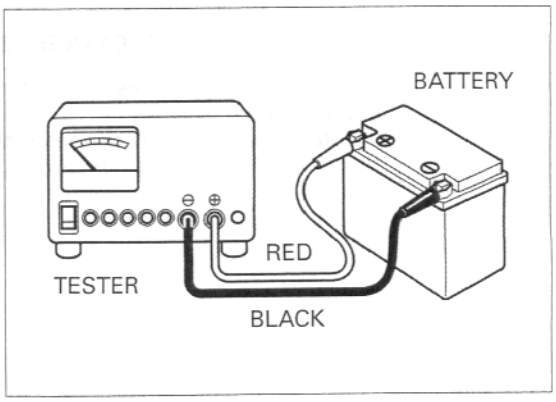

1. Turn the Power Switch to the OFF position.
2. Set the BATTERY AMP HR. SELECTOR SWITCH for the size of the battery being charged.
3. Set the TIMER to the position indicated by the Honda Battery Tester; RED-3, RED-2, or YELLOW 1. If you are charging a new battery, set the switch to the NEW BATT position.
4. Attach the clamps to the battery terminals; RED to Positive, BLACK to negative.

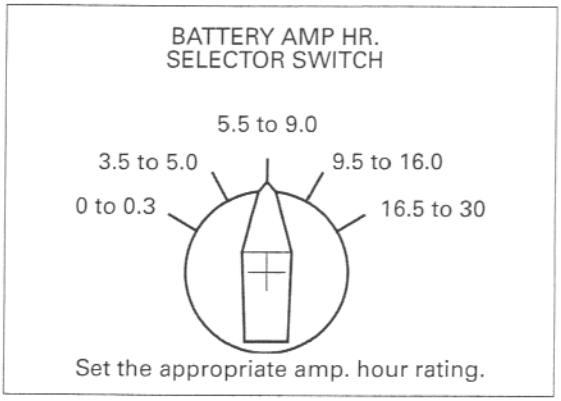

Set the appropriate amp. hour rating.

Connect the battery cables only when the Power Switch is OFF.

5. Turn the Power Switch to the ON position.
6. When the timer reaches the "Trickle" position, the charging cycle is complete. Turn the Power Switch OFF and disconnect the clamps. the charger will automatically switch to the "Trickle" mode after the set charging time has elapsed.
7. Let the battery cool for at least 10minutes or until gassing subsides after charging.
8. Re-test the battery using the Honda Battery Tester and recharge if necessary using the above steps.

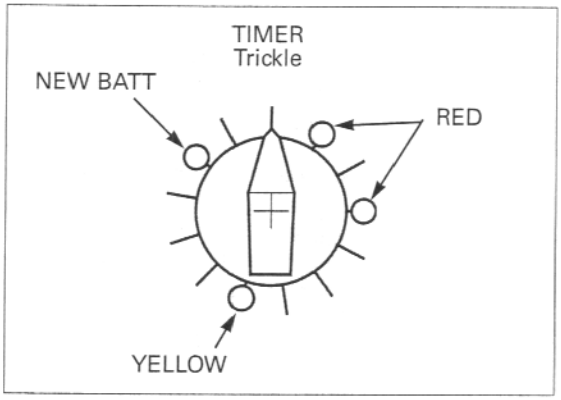

CHARGING SYSTEM INSPECTION

CURRENT LEAKAGE INSPECTION

Turn the ignition switch OFF and disconnect the negative battery cable from the battery.
Connect the ammeter (+) probe to the ground cable and the ammeter (–) probe to the battery (–) terminal.
With the ignition switch off, check for current leakage.

- When measuring current using a tester, set it to a high range, and then bring the range down to an appropriate level. Current flow higher than the range selected may blow out the fuse in the tester.
- While measuring current, do not turn the ignition on. A sudden surge of current may blow out the fuse in the tester.

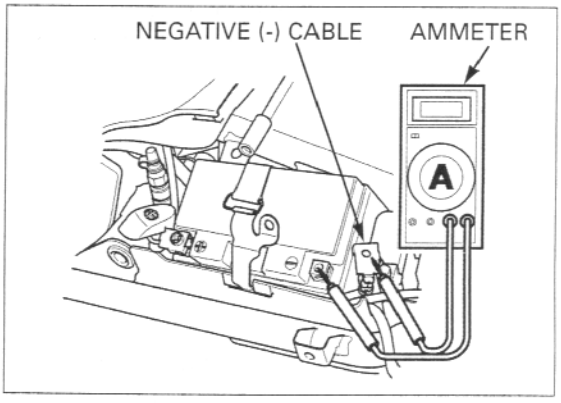

SPECIFIED CURRENT LEAKAGE: 2.5 mA max.

If current leakage exceeds the specified value, a shorted circuit is likely.
Locate the short by disconnecting connections one by one and measuring the current.

CHARGING VOLTAGE INSPECTION

Be sure the battery is in good condition before performing this test.

Do not disconnect the battery or any cable in the charging system with out first switching off the ignition switch. Failure to follow this precaution can damage the tester or electrical components.

Warm up the engine to normal operating temperature.
Stop the engine, and connect the multimeter as shown.

- To prevent a short, make absolutely certain which are the positive and negative terminals or cable.

Restart the engine.
With the headlight on Hi beam, measure the voltage on the multimeter when the engine runs at 5,000 rpm.

Standard: Measured battery voltage (page 16-5) < Measured charging voltage (see above) < 15.5 V at 5,000 rpm

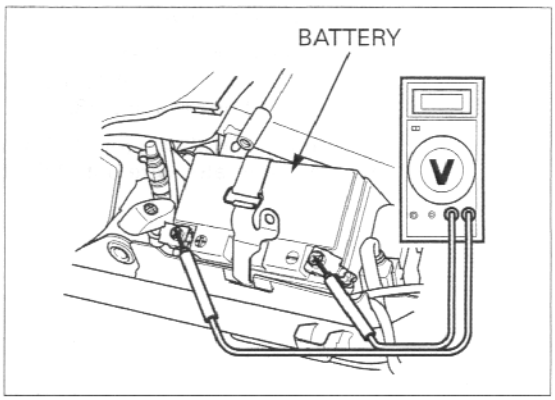

ALTERNATOR CHARGING COIL

INSPECTION

It is not necessary to remove the stator coil to make this test.

Remove the side cowl (page 2-8).

Disconnect the alternator 3P (Natural) connector.

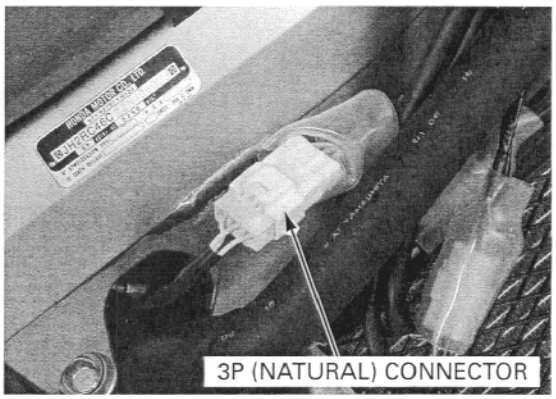

Check the resistance between all three Yellow terminals.

STANDARD: 0.1 – 1.0 Ω (at 20°C/68°F)

Check for continuity between all three Yellow terminals and Ground.
There should be no continuity.

If readings are far beyond the standard, or if any wire has continuity to ground, replace the alternator stator.

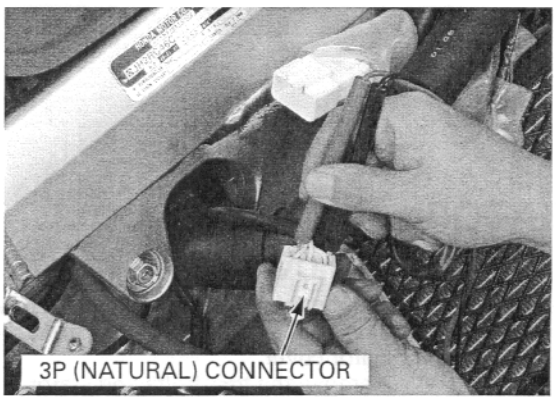

ALTERNATOR COVER REMOVAL

Remove the following:

- Side cowl (page 2-8)
- Radiator reserve tank (page 6-17)
- Throttle body (page 5-63)

Disconnect the alternator 3P (Natural) connector.
Pull the alternator wire out of the frame.

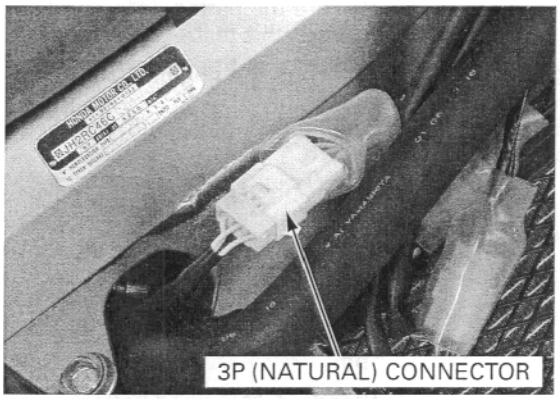

The alternator cover (stator) is magnetically attached to the flywheel, be careful during removal.

Remove the alternator cover SH bolts, wire clamp and alternator cover.

The engine oil will run out when the alternator cover is removed. Set a clean oil pan under the engine and add the recommended oil to the specified level after installation.

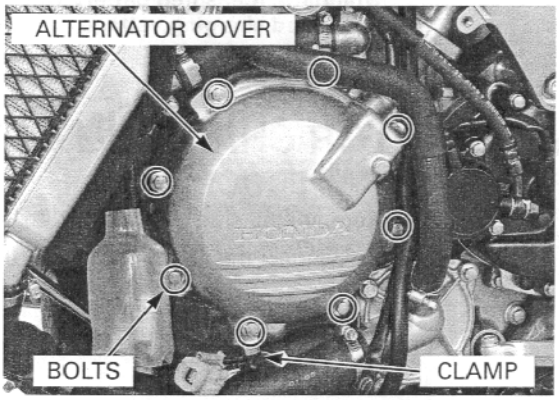

Remove the gasket and dowel pins.

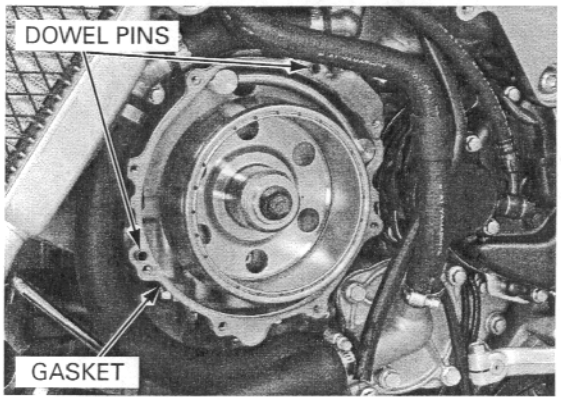

STATOR

REMOVAL

Remove the socket bolt and stator wire holder.
Remove the alternator wire grommet from the alternator cover.
Remove the torx bolts and stator.

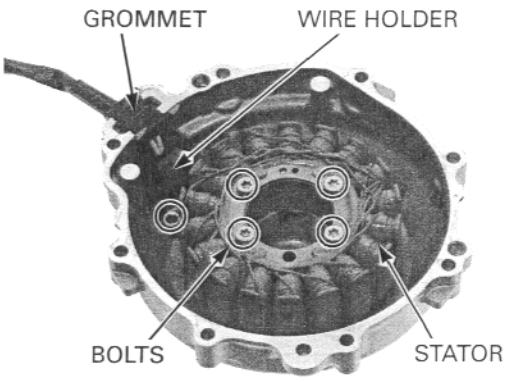

INSTALLATION

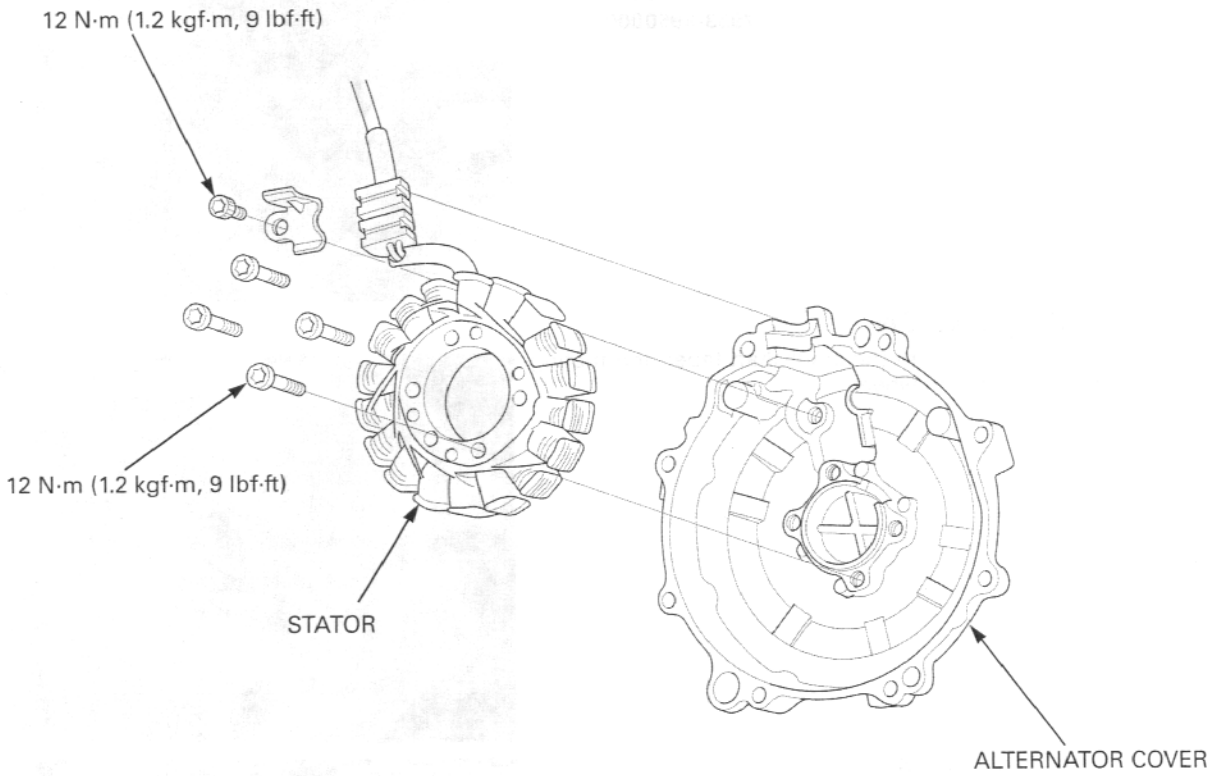

Install the stator into the alternator cover.
Apply sealant to the wire grommet, then install the wire grommet into the alternator cover groove securely.
Install and tighten the torx bolts to the specified torque.

TORQUE: 12 N·m (1.2 kgf·m, 9 lbf·ft)

Install the wire holder and tighten the socket bolt to the specified torque.

TORQUE: 12 N·m (1.2 kgf·m, 9 lbf·ft)

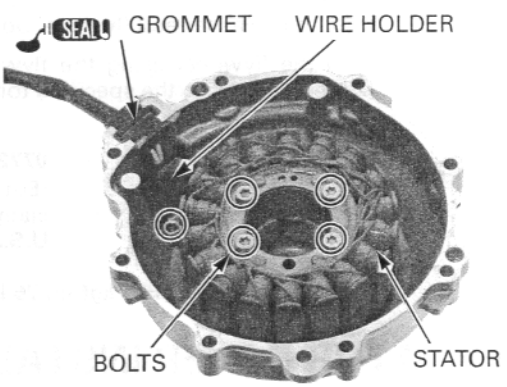

FLYWHEEL

REMOVAL

Remove the alternator cover (page 17-10).

Hold the flywheel using the flywheel holder, then remove the flywheel bolt.

TOOL:

Flywheel holder	**07725-0040000 (Equivalent commercially available in U.S.A.)**

Remove the washer.

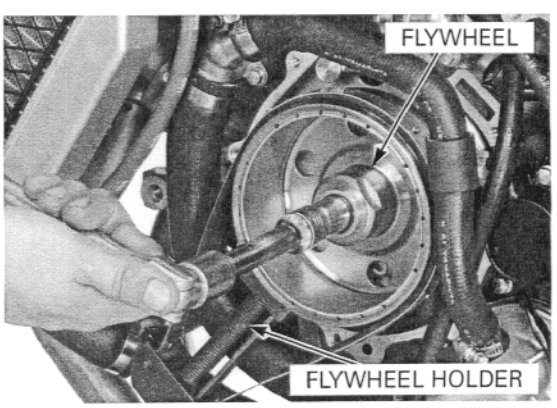

Remove the flywheel using the special tools

TOOL:

Rotor puller	**07733-0020001 or 07933-3950000**

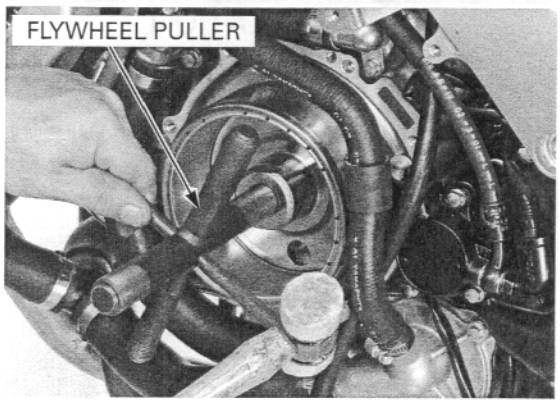

INSTALLATION

Clean any oil from the crankshaft taper and mating surface of the flywheel.

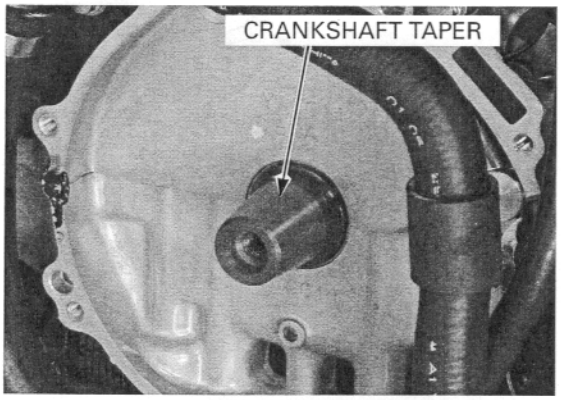

Install the flywheel.
Apply oil to the flywheel bolt threads and seating surface.
Install the washer and flywheel bolt.

Hold the flywheel using the flywheel holder, then tighten the bolt to the specified torque.

TOOL:

Flywheel holder	**07725-0040000 (Equivalent commercially available in U.S.A.)**

TORQUE: 103 N·m (10.5 kgf·m, 76 lbf·ft)

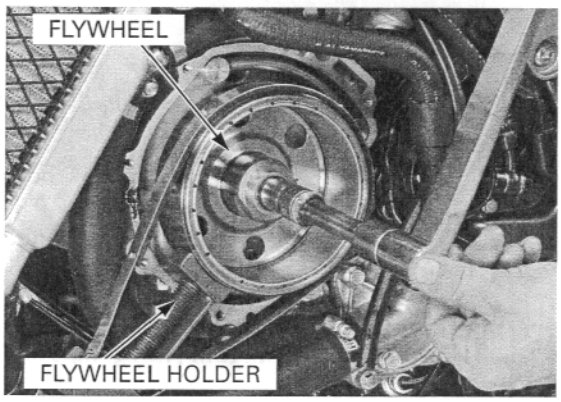

ALTERNATOR COVER INSTALLATION

Apply sealant to the mating surfaces of the crankcase as shown.

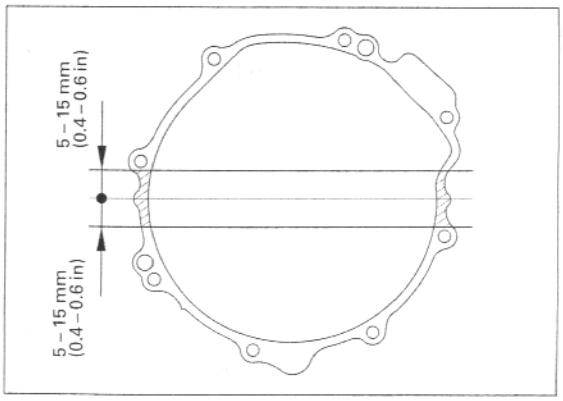

Install the dowel pins and new gasket.

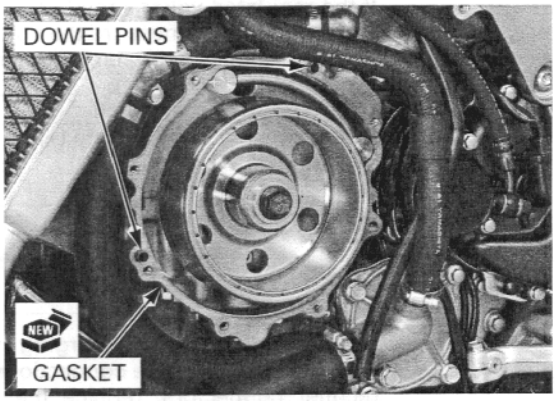

The alternator cover (stator) is magnetically attached to the flywheel, be careful during installation.

Install the alternator cover.

Install the wire clamp and bolts, then tighten the SH bolts.

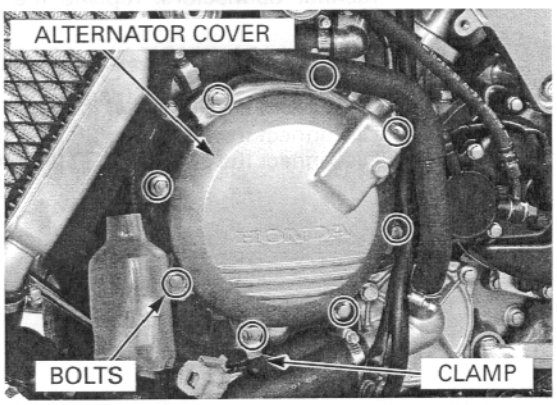

Route the alternator wire into the frame, connect the alternator 3P (Natural) connector.

Add recommended oil up to the proper level (page 3-14).

Install the following:

- Throttle body (page 5-67)
- Radiator reserve tank (page 6-17)
- Side cowl (page 2-10)

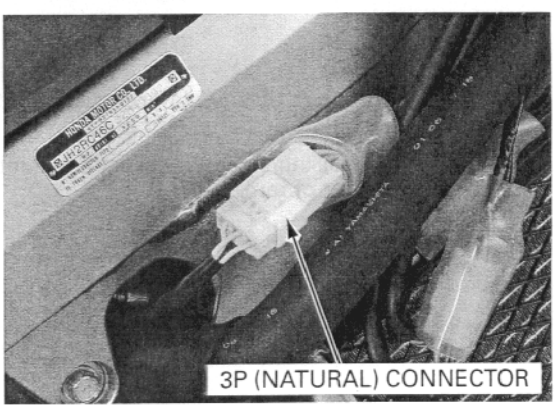

REGULATOR/RECTIFIER

SYSTEM INSPECTION

Remove the side cowl (page 2-8).

Disconnect the regulator/rectifier connectors, and check it for loose contact or corroded terminals.

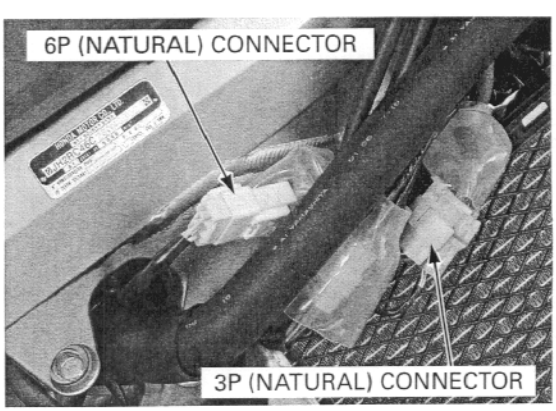

If the regulated voltage reading (page 17-9) is out of the specification, measure the voltage between connector terminals (wire harness side) as follows:

Item	Terminal	Specification
Battery charging line	Red/white (+) and ground (-)	Battery voltage should register
Charging coil line	Yellow and Yellow	0.1 – 1.0 Ω at (20°C/68°F)
Ground line	Green and ground	Continuity should exist



If all components of the charging system are normal and there are no loose connections at the regulator/rectifier connectors, replace the regulator/rectifier unit.

REMOVAL/INSTALLATION

Remove the side cowl (page 2-8).

Disconnect the alternator 3P (Natural) connector.
Disconnect the alternator 6P (Natural) connector.

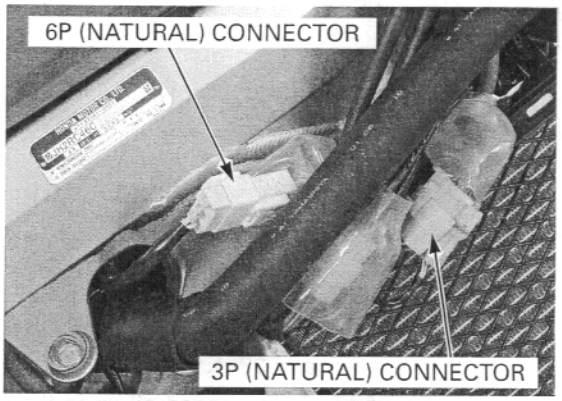

Remove the regulator/rectifier unit mounting bolts, regulator/rectifier and plate.

Install the regulator/rectifier unit in the reverse order of removal.

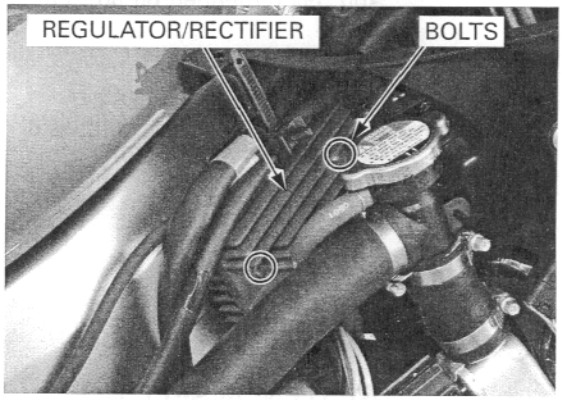

18. IGNITION SYSTEM

SYSTEM DIAGRAM 18-2

SERVICE INFORMATION 18-3

TROUBLESHOOTING 18-4

IGNITION SYSTEM INSPECTION 18-5

IGNITION PULSE GENERATOR 18-8

IGNITION TIMING 18-9

SYSTEM LOCATION

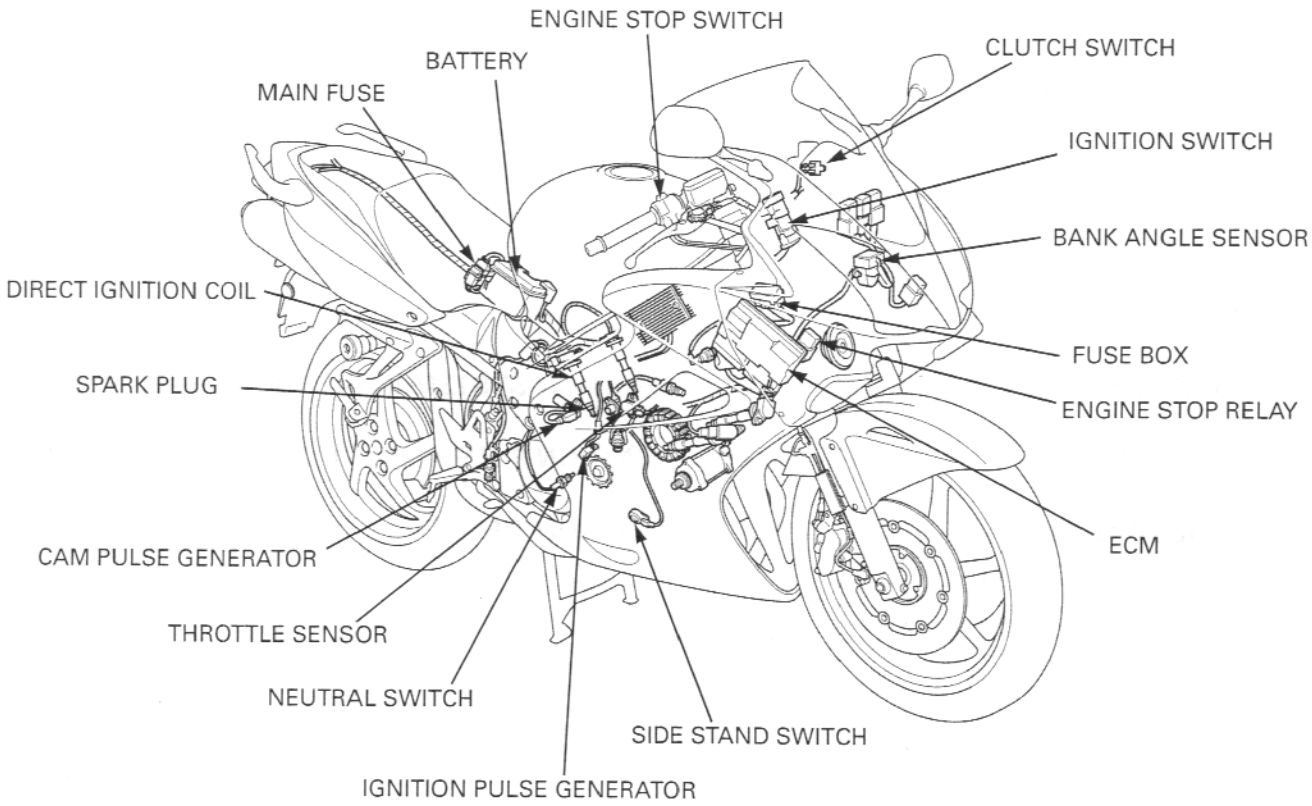

SYSTEM DIAGRAM

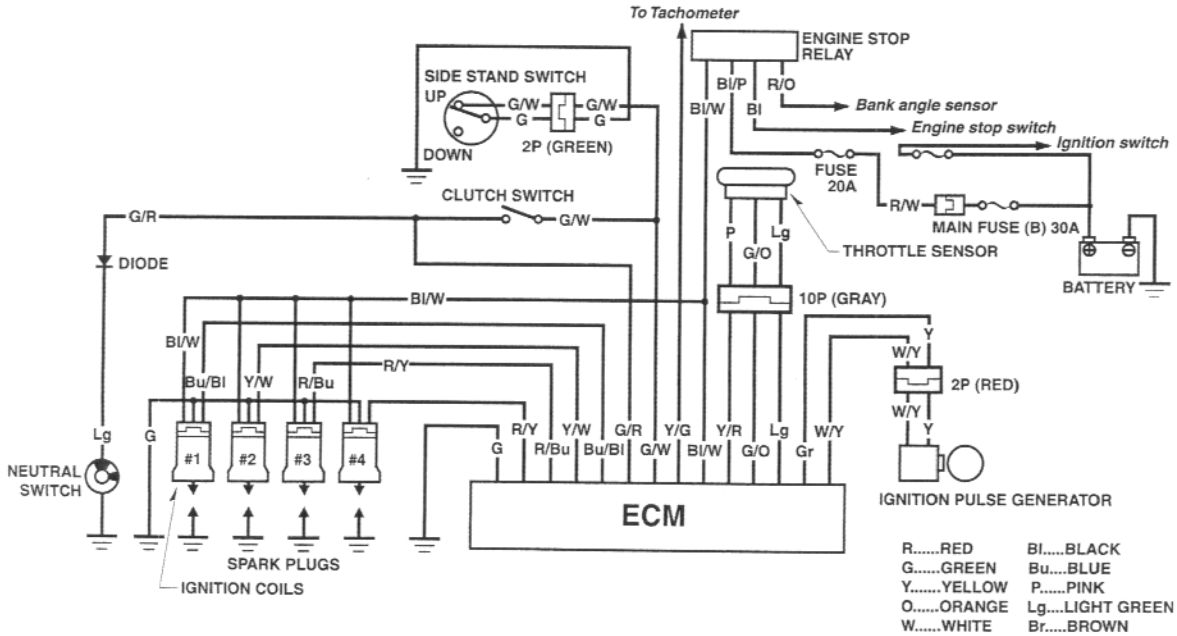

SERVICE INFORMATION

GENERAL

- Some electrical components may be damaged if terminals or connectors are connected or disconnected while the ignition switch is ON and current is present.
- When servicing the ignition system, always follow the steps in the troubleshooting sequence (page 18-4).
- This motorcycle's Ignition Control Module (ICM) is built into the Engine Control Module (ECM).
- The ignition timing does not normally need to be adjusted since the ECM is factory preset.
- The ECM may be damaged if dropped. Also if the connector is disconnected when current is flowing, the excessive voltage may damage the module. Always turn off the ignition switch before servicing.
- A faulty ignition system is often related to poor connections. Check those connections before proceeding. Make sure the battery is adequately charged. Using the starter motor with a weak battery results in a slower engine cranking speed as well as no spark at the spark plug.
- Use spark plugs of the correct heat range. Using spark plugs with an incorrect heat range can damage the engine.
- This motorcycle features direct ignition coils, where the ignition coils and spark plug caps are integrated.
- Refer to the Throttle Position (TP) sensor inspection (page 5-80), cam pulse generator inspection (page 5-79) and ECM inspection (page 5-83).

SPECIFICATIONS

ITEM		SPECIFICATIONS
Spark plug (Iridium)	Standard	IMR9B-9H (NGK)
		VNH27Z (DENSO)
	Optional	IMR8B-9H (NGK)
		VNH24Z (DENSO)
Spark plug gap		0.80 – 0.90 mm (0.031 – 0.035 in)
Ignition coil peak voltage		100 V minimum
Ignition pulse generator peak voltage		0.7 V minimum
Ignition timing ("F"mark)		15° BTDC at idle

TORQUE VALUES

Spark plug	12 N·m (1.2 kgf·m, 9 lbf·ft)	
Timing hole cap	18 N·m (1.8 kgf·m, 13 lbf·ft)	Apply grease to the threads
Ignition pulse generator rotor/primary drive gear flange bolt	103 N·m (10.5 kgf·m, 76 lbf·ft)	Apply oil to the threads
Ignition pulse generator SH flange bolt	12 N·m (1.2 kgf·m, 9 lbf·ft)	

TOOLS

Peak voltage tester (U.S.A. only) or Peak voltage adaptor	07HGJ-0020100 (not available in U.S.A.) with Commercially available digital multimeter (impedance 10 MΩ/DCV minimum)

TROUBLESHOOTING

- Inspect the following before diagnosing the system.
  - Faulty spark plug
  - Loose spark plug cap or spark plug wire connection
  - Water got into the direct ignition coil (shorting the ignition coil secondary voltage)
- If there is no spark at either cylinder, temporarily exchange the direct ignition coil with the other good one and perform the spark test. If there is spark, the exchanged direct ignition coil is faulty.
- "Initial voltage" of the ignition primary coil is the battery voltage with the ignition switch turned to "ON" and the engine stop switch turned to "RUN" (the engine is not cranked by the starter motor).

No spark at all plugs

	Unusual condition	Probable cause (Check in numerical order)
Ignition coil primary voltage	No initial voltage with ignition and engine stop switches turned ON/RUN (other electrical components are normal)	1. Faulty engine stop switch. 2. An open circuit in Black/white wire between the direct ignition coil and engine stop switch. 3. Loose or poor contact of the direct ignition coil primary wire terminal, or an open circuit in primary coil (check at the ECM connector). 4. Faulty ECM (when No.1 through 3 are normal).
Ignition pulse generator	Peak voltage low	1. The multimeter impedance is too low; below 10 MΩ/DCV. 2. Cranking speed is too slow (battery under charged). 3. The sampling timing of the tester and measured pulse were not synchronized (System is normal if measured voltage is over the standard voltage at least once). 4. Faulty ignition pulse generator (in case when above No. 1 – 3 are normal).
	No peak voltage.	1. Faulty peak voltage adaptor. 2. Faulty ignition pulse generator.

IGNITION SYSTEM INSPECTION

IGNITION COIL PRIMARY VOLTAGE

Check cylinder compression and check that the spark plugs are installed correctly.

Avoid touching the tester probes to prevent electric shock.

Disconnect the direct ignition coil connector from the ignition coil.
Turn the ignition switch to "ON" and the engine stop switch on.
Check for initial voltage at this time.

Connection: Black/white (+) - Green (-)
Standard: Battery voltage

If the initial voltage cannot be measured, check the power supply circuit.

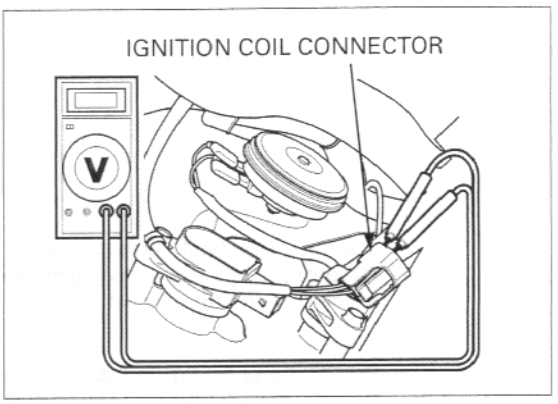

Check for continuity of the Blue/black, Yellow/white, Red/blue and Red/yellow wires between the ECM connector and each direct ignition coil connector.
If no defects are found in wire harness, replace the direct ignition coil with a new one and recheck initial valve.
If the intial voltage is measured, replaced direct ignition coil is faulty.
If the initial voltage cannot be measured, replace the ECM with a new one and recheck.

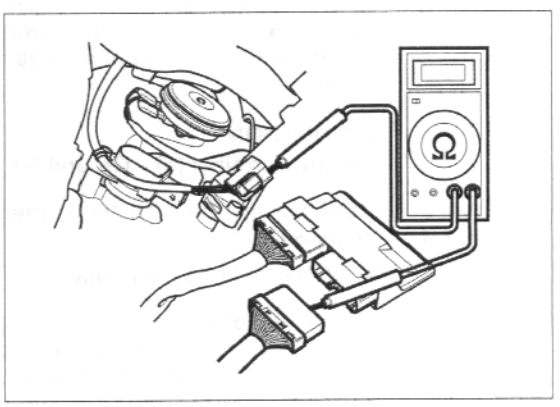

IGNITION PULSE GENERATOR PEAK VOLTAGE

- Check all system connections before inspection. If the system is disconnected, incorrect peak voltage might be measured.
- Check cylinder compression and check that the spark plugs are installed correctly.
- Use recommended digital multimeter or commercially available digital multimeter with an impedance of 10 MΩ/DCV minimum.
- The display value differs depending upon the internal impedance of the multimeter.
- If the peak voltage tester (U.S.A. only) is used, follow the manufacturer's instruction.

Connect the peak voltage tester or peak voltage adaptor to the digital multimeter.

TOOLS:
Peak voltage tester (U.S.A only) or
Peak voltage adaptor 07HGJ-0020100
(not available in U.S.A.) with commercially available digital multimeter (impedance 10 MΩ/DCV minimum)

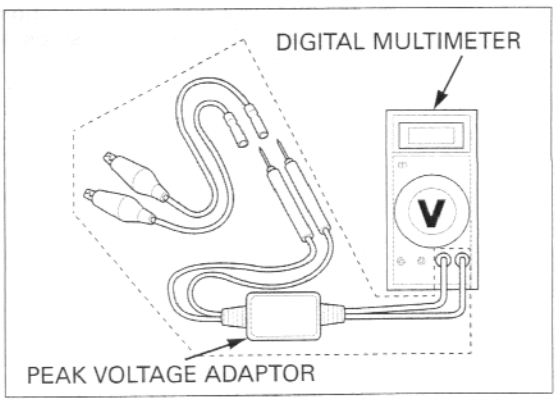

Remove the side cowl (page 2-8).

Disconnect the 26P (Light gray) connector from the ECM.

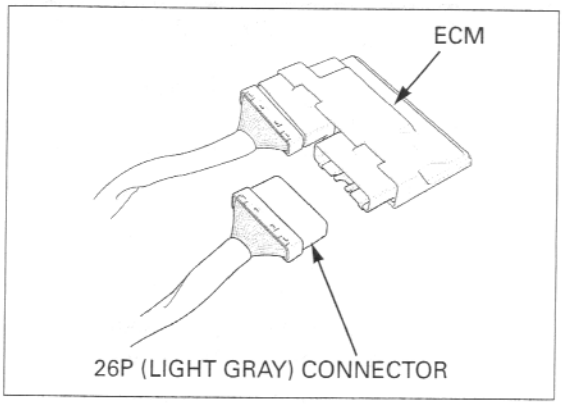

Connect the peak voltage tester or peak voltage adaptor probes to the connector terminal of the wire harness side and ground.

TOOLS:
Peak voltage tester (U.S.A. only) or
Peak voltage adaptor 07HGJ-0020100
(not available in U.S.A.) with commercially available digital multimeter (impedance 10 MΩ/DCV minimum)

CONNECTION:
Yellow terminal (+) – Ground (–)

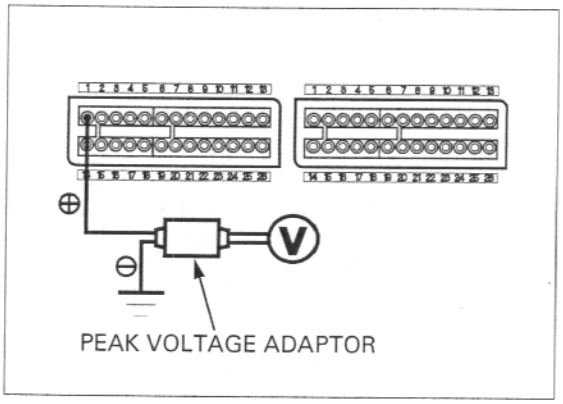

Avoid touching the spark plugs and tester probes to prevent electric shock.

Crank the engine with the starter motor and read the peak voltage.

PEAK VOLTAGE: 0.7 V minimum

If the peak voltage measured at ECM multi-connector is abnormal, measure the peak voltage at the ignition pulse generator connector.

Open and support the fuel tank using the equipped tools (page 3-5).

Disconnect the ignition pulse generator 2P (Red) connector and connect the tester probes to the terminal (Yellow and White/yellow).
In the same manner as at the ECM connector, measure the peak voltage and compare it to the voltage measured at the ECM connector.

- If the peak voltage measured at the ECM is abnormal and the one measured at the ignition pulse generator is normal, the wire harness has an open circuit or loose connection.
- If both peak voltages measure are abnormal, check each item in the troubleshooting chart. If all items are normal, the ignition pulse generator is faulty. See following steps for ignition pulse generator replacement.

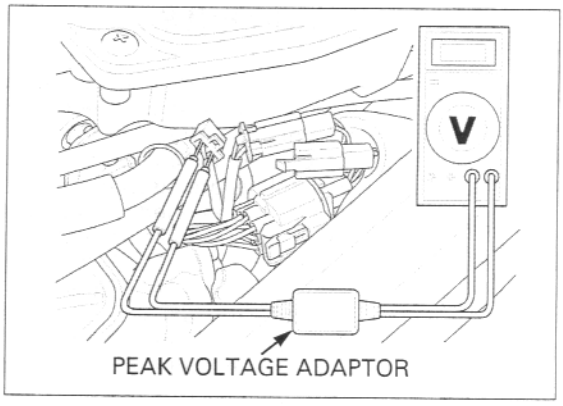

IGNITION PULSE GENERATOR

REMOVAL

Open and support the fuel tank using the equipped tools (page 3-5).

Disconnect the ignition pulse generator 2P (Red) connector.

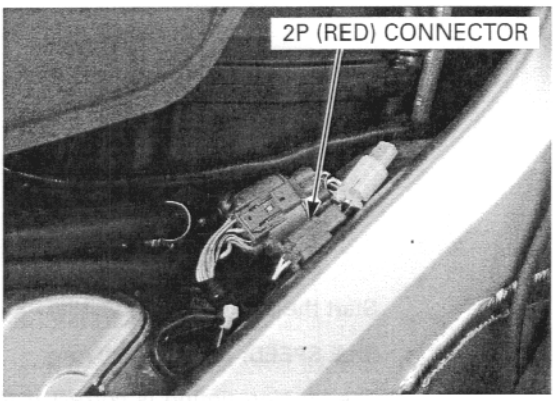

Remove the right crankcase cover (page 9-14).

Remove the ignition pulse generator SH bolts.
Release the wire grommet from the right crankcase cover groove, then remove the ignition pulse generator.

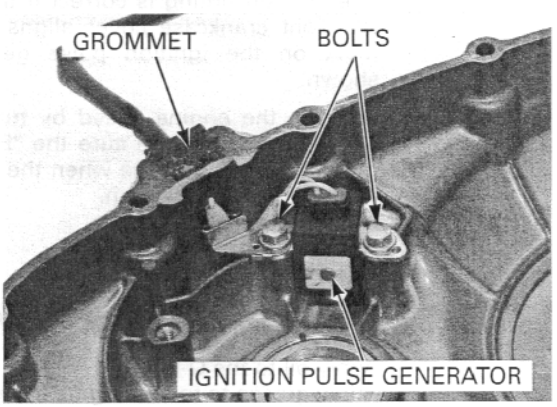

INSTALLATION

Install the ignition pulse generator into the cover.
Apply sealant to the wire grommet, then install it into the groove of the cover.
Install and tighten the ignition pulse generator SH bolts to the specified torque.

TORQUE: 12 N·m (1.2 kgf·m, 9 lbf·ft)

Install the right crankcase cover (page 9-25).

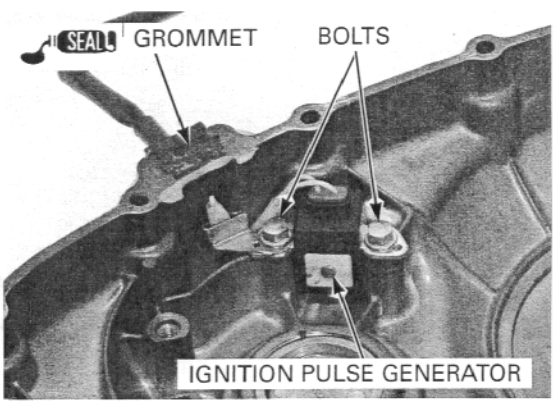

IGNITION TIMING

Warm up the engine.
Stop the engine and remove the timing hole cap.

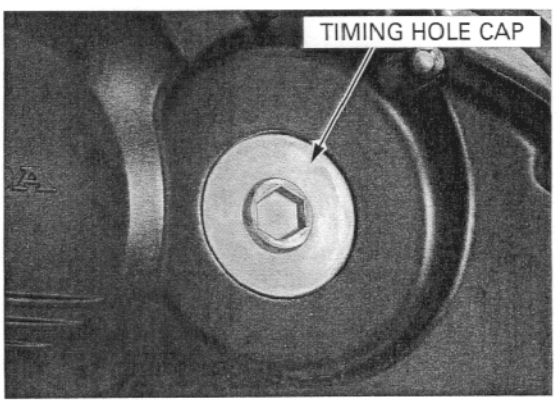

Read the instructions for timing light operation.

Connect the timing light to the No.1 spark plug wire.

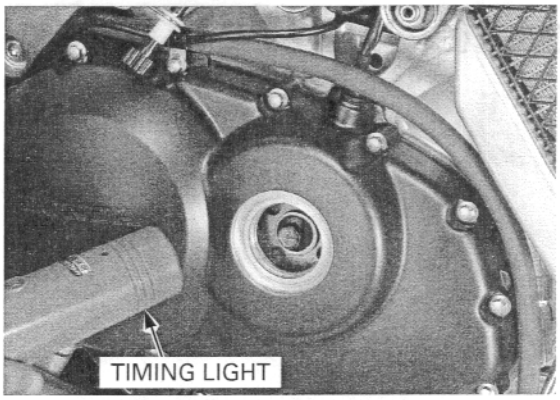

Start the engine and let it idle.

IDLE SPEED: 1,200 ± 100 rpm

The ignition timing is correct if the index mark on the right crankcase cover aligns between the "F" mark on the ignition pulse generator rotor as shown.

Increase the engine speed by turning the throttle stop screw and make sure the "F" mark begins to move counterclockwise when the engine speeds at approximately 2,000 rpm.

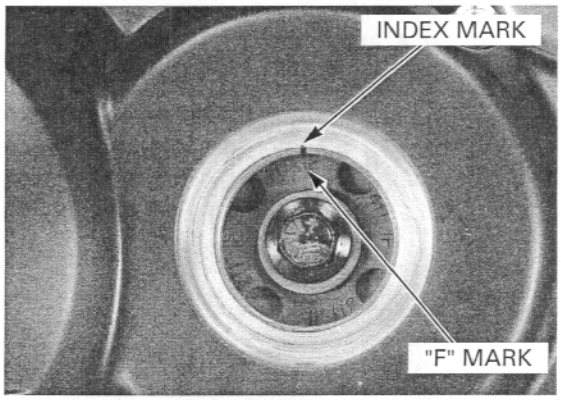

Check the O-ring is in good condition, replace if necessary.
Apply oil to the O-ring.
Apply grease to the timing hole cap threads.

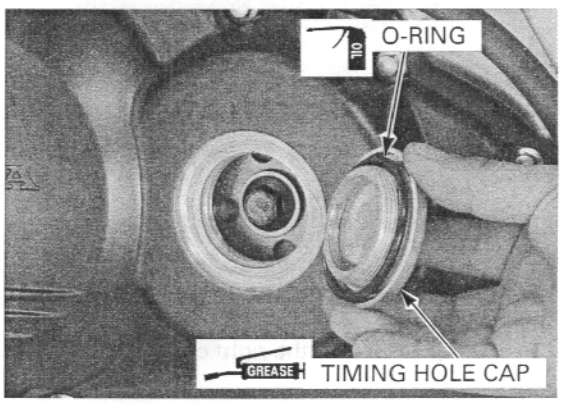

Tighten the timing hole cap to the specified torque.

TORQUE: 18 N·m (1.8 kgf·m, 13 lbf·ft)

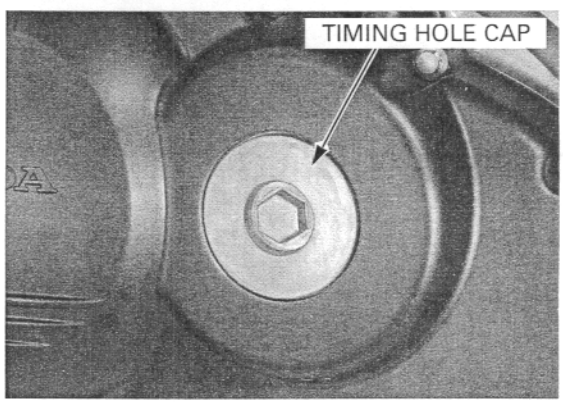

19. ELECTRIC STARTER/STARTER CLUTCH

SYSTEM DIAGRAM 19-2

SERVICE INFORMATION 19-3

TROUBLESHOOTING 19-4

STARTER MOTOR 19-6

STARTER CLUTCH 19-11

STARTER RELAY SWITCH 19-17

DIODE 19-18

SYSTEM LOCATION

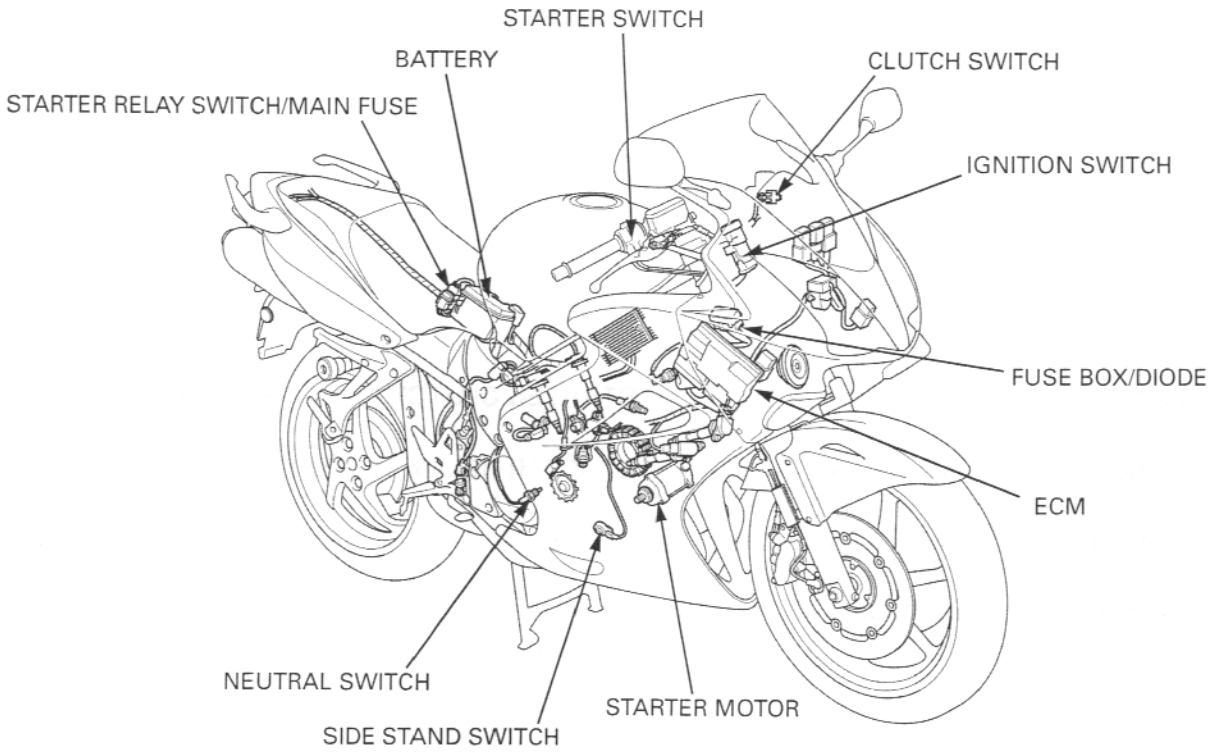

SYSTEM DIAGRAM

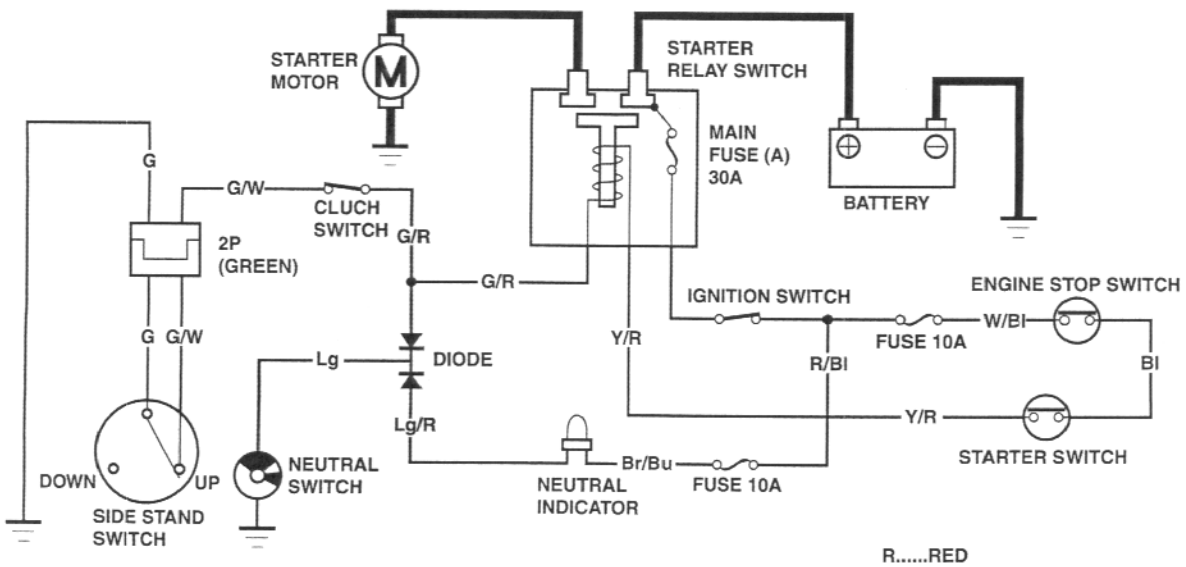

R.....RED
G.....GREEN
Y.....YELLOW
W.....WHITE
Bl.....BLACK
Bu....BLUE
Br.....BROWN
Lg....LIGHT GREEN

SERVICE INFORMATION

GENERAL

- Always turn the ignition switch OFF before servicing the starter motor. The motor could suddenly start, causing serious injury.
- When checking the starter system, always follow the steps in the troubleshooting flow chart (page 19-4).
- A weak battery may be unable to turn the starter motor quickly enough, or supply adequate ignition current.
- If the current is kept flowing through the starter motor to turn it while the engine is not cranking over, the starter motor may be damaged.
- Refer to the following components information.
  - Ignition switch (page 20-21)
  - Engine stop switch (page 20-22)
  - Starter switch (page 20-22)
  - Neutral switch (page 20-25)
  - Side stand switch (page 20-25)
  - Clutch switch (page 20-24)

SPECIFICATIONS

Unit: mm (in)

ITEM	STANDARD	SERVICE LIMIT
Starter motor brush length	12.0 – 13.0 (0.47 – 0.51)	6.5 (0.26)
Starter driven gear boss O.D.	45.657 – 45.673 (1.7975 – 1.7981)	45.64 (1.797)

TORQUE VALUES

Ignition pulse generator rotor/primary drive gear flange bolt	103 N·m (10.5 kgf·m, 76 lbf·ft)	Apply oil to the threads and flange surface

TROUBLESHOOTING

Starter motor does not turn

1. **Fuse Inspection**

   Check for blown main fuse or sub fuse.

   Is the fuse blown?

   YES – Replace the fuse.

   NO – GO TO STEP 2.

2. **Battery Inspection**

   Make sure the battery is fully charged and in good condition.

   Is the battery in good condition?

   YES – Replace the fuse.

   NO – GO TO STEP 3.

3. **Starter Relay Switch Operation**

   Check the starter relay switch operation.
   You should hear the relay "CLICK" when the starter switch button is depressed.

   Does the relay "CLICK"?

   YES – GO TO STEP 4.

   NO – GO TO STEP 5.

4. **Starter Motor Inspection**

   Apply battery voltage to the starter motor directly and check the operation.

   Does the starter motor turn?

   YES – • Poorly connected starter motor cable.
   • Faulty starter relay switch (page 19-17).

   NO – Faulty starter motor (page 19-6).

5. **Relay Coil Ground Wire Lines Inspection**

   Disconnect the starter relay switch connector, and check the relay coil ground wire lines as below for continuity:

   1. Green/Red terminal-clutch switch diode – neutral switch line (with the transmission in neutral and clutch lever released).
   2. Green/Red terminal/clutch switch – side stand switch line (in any gear except neutral, and with the clutch lever pulled in and the side stand up.

   Apply battery voltage to the starter motor directly and check the operation.

   Is there continuity?

   NO – • Faulty neutral switch (page 20-25).
   • Faulty neutral diode (page 19-18).
   • Faulty clutch switch (page 20-24).
   • Faulty side stand switch (page 20-25).
   • Loose or poor contact connector.
   • Open circuit in wire harness.

   YES – GO TO STEP 6.

6. **Starter Relay Voltage Inspection**

   Connect the starter relay switch connector.

   With the ignition switch ON and the starter switch pushed, measure the starter relay voltage at the starter switch connector (between Yellow/Red (+) and ground (–).

   Apply battery voltage to the starter motor directly and check the operation.

   Is there battery voltage?

   NO – • Faulty ignition switch (page 20-21).
   • Faulty starter switch (page 20-22).
   • Blown main or sub-fuse.
   • Faulty clutch switch (page 20-24) / side stand diode (page 19-18).
   • Loose or poor contact connector.
   • Open circuit in wire harness.

   YES – GO TO STEP 7.

7. **Starter Relay Switch Operation**

   Check the starter relay switch operation.

   Is there battery voltage?

   NO – Faulty starter relay switch.

   YES – Loose or poor contact starter relay switch connector.

The starter motor turns when the transmission is in neutral, but does not turn with the transmission in any position except neutral, with the side stand up and the clutch lever pulled in.

1. **Clutch Switch Inspection**

   Check the clutch switch operation.

   Is the clutch switch operation normal?

   NO – Faulty clutch switch.

   YES – GO TO STEP 2.

2. **Clutch Switch Inspection**

   Check the side stand switch operation.

   Is the side stand switch operation normal?

   NO – Faulty side stand switch (page 20-25).

   YES – • Open circuit in wire harness.
   • Loose or poor contact connector.

Starter motor turns engine slowly
- Low battery voltage
- Poorly connected battery terminal cable
- Poorly connected starter motor cable
- Faulty starter motor
- Poor connected battery ground cable

Starter motor turns, but engine does not turn
- Starter motor is running backwards
  - Case assembled improperly
  - Terminals connected improperly
- Faulty starter clutch
- Damaged or faulty starter drive gear

Starter relay switch "Clicks", but engine does not turn over
- Crankshaft does not turn due to engine problems

STARTER MOTOR

REMOVAL

Remove the side cowl and inner half cowl (page 2-8).

Remove the nut and the starter motor cable from the starter motor.
Remove the starter motor mounting bolts.

Pull the starter motor out of the crankcase.

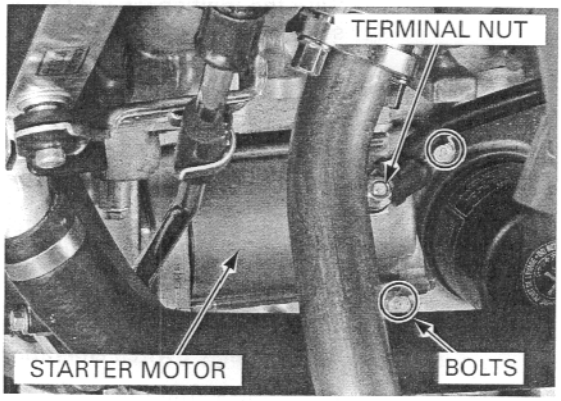

DISASSEMBLY

Remove the following:

- Starter motor case bolts

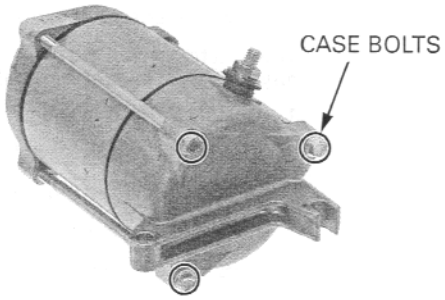

Record the location and number of shims.

- Rear cover assembly
- Seal ring
- Shim (s)

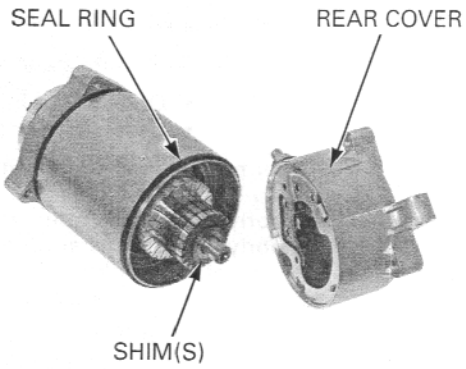

Record the location and number of shims.

- Front cover assembly
- Seal ring
- Lock washer
- Insulated washer
- Shim (s)
- Armature

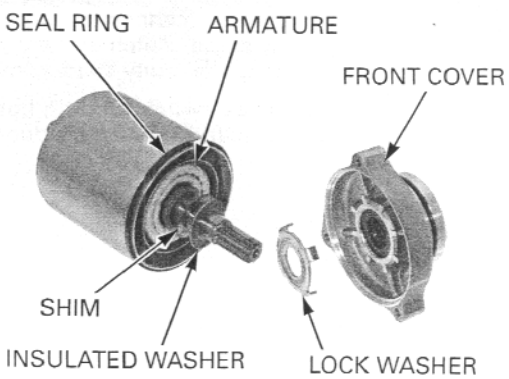

INSPECTION

Check the bushing in the rear cover for wear or damage.

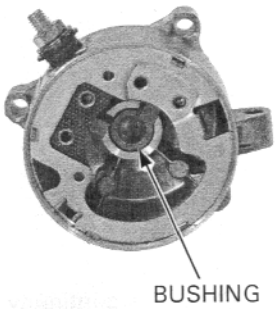

Check the oil seal and needle bearing in the front cover for deterioration, wear or damage.

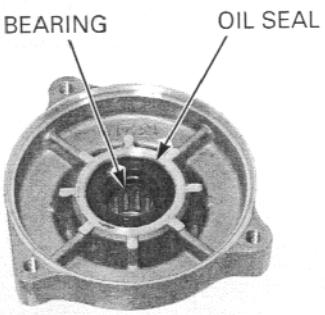

Do not use emery or sand paper on the commutator.

Check the commutator bars of the armature for discoloration.

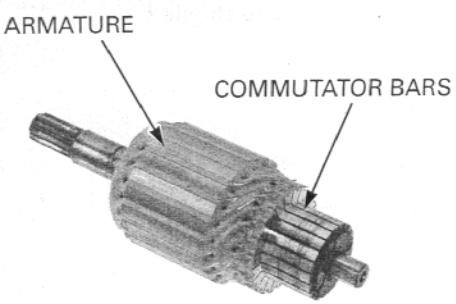

Check for continuity between pairs of commutator bars.
There should be continuity.

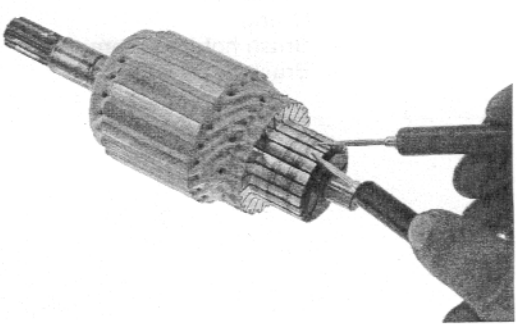

Check for continuity between each commutator bar and the armature shaft.
There should be no continuity.

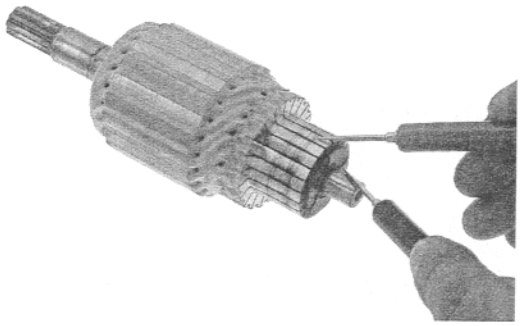

Check for continuity between the insulated brush and cable terminal (the indigo colored wire or the insulated brush holder).
There should be continuity.

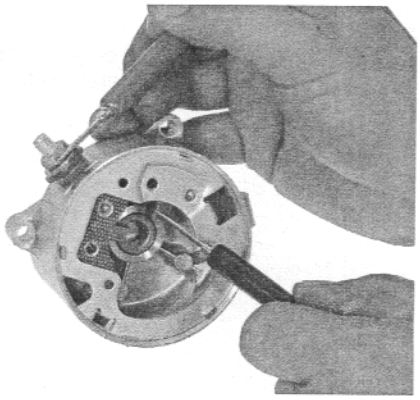

Check for continuity between the cable terminal and the rear cover.
There should be no continuity.

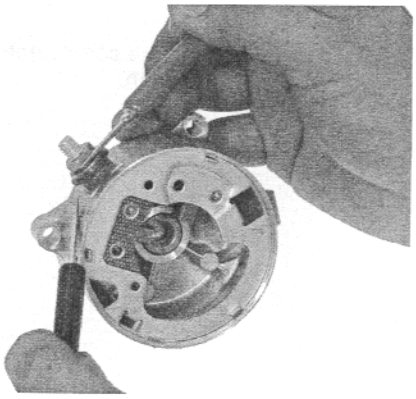

Remove the following:

- Nut
- Washer
- Insulators
- O-ring
- Brush holder assembly
- Brush/terminal

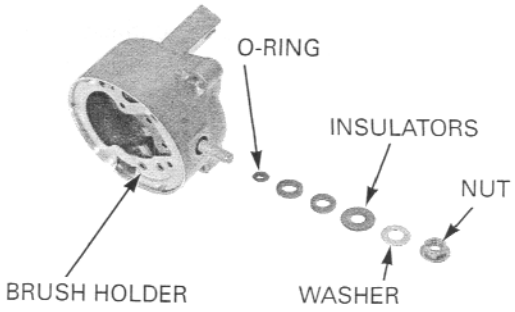

Inspect the brushes for damage and measure the brush length.

SERVICE LIMIT: 6.5 mm (0.26 in)

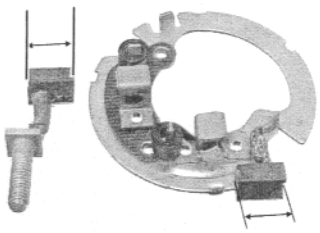

ASSEMBLY

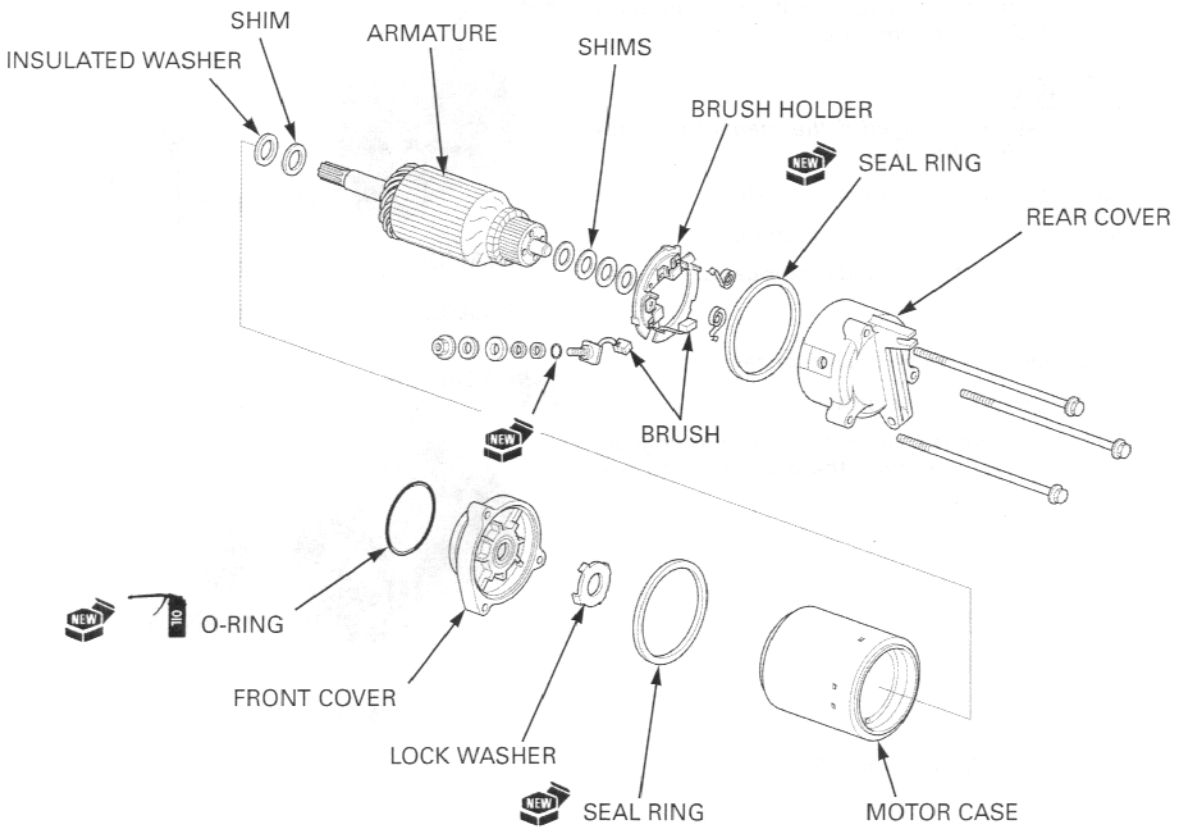

Set the brushes on the brush holder.

Align the brush holder plate boss with the groove of the motor case.

Install the brush holder onto the rear cover.

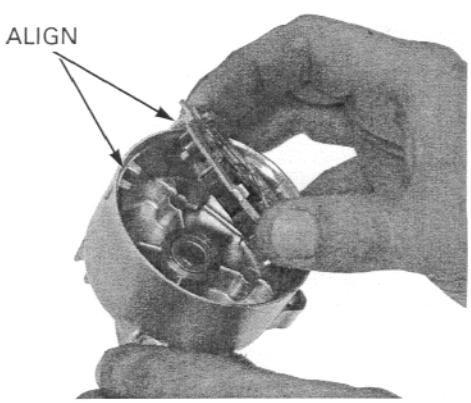

Install the insulators properly as noted during removal.

Install the following:

- New O-ring
- Insulated washers
- Washer
- Nut

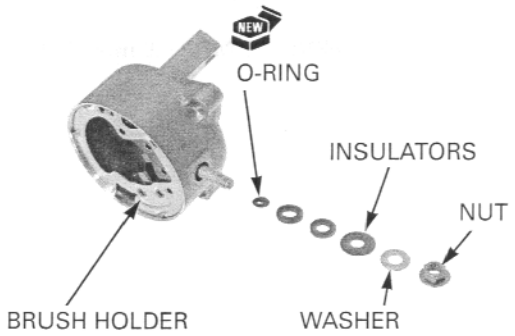

Install the armature in the motor case.
When installing the armature into the motor case, hold the armature tightly to keep the magnet of the case from pulling the armature against it.

NOTICE

The coil may be damaged if the magnet pulls the armature against the case.

Install the shims properly as noted during removal.

Install the shims on the armature shaft.

Install a new seal ring onto the motor case.

Assemble the front cover and motor case.

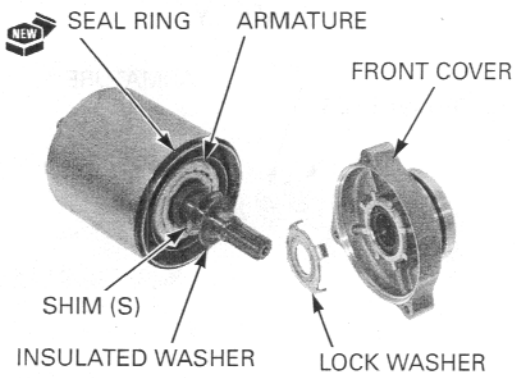

Install a new seal ring on the motor case.

Install the shims properly as noted during removal.

Install the shims onto the armature shaft.

Assemble the motor case and rear cover, aligning the brush holder boss with the groove in the rear cover.

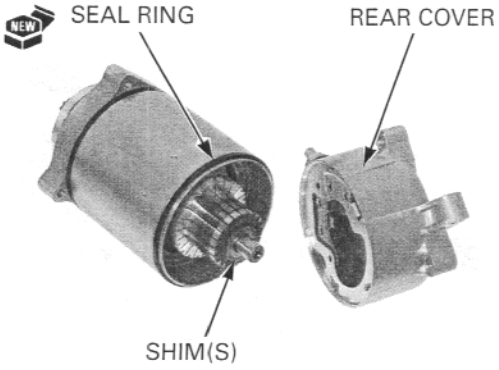

Make sure the index lines are aligned.

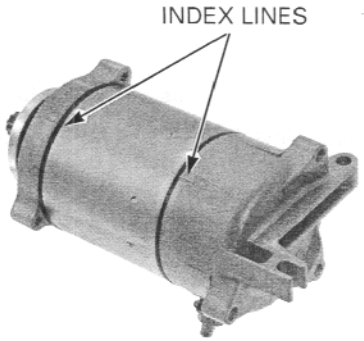

Install and tighten the case bolts securely.

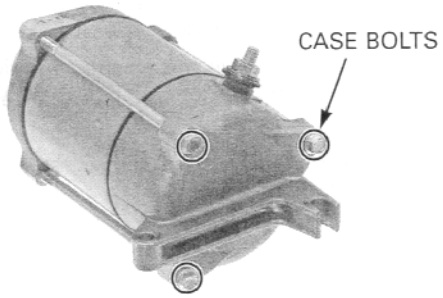

INSTALLATION

Coat a new O-ring with oil and install it into the starter motor groove.

Install the starter motor into the crankcase.

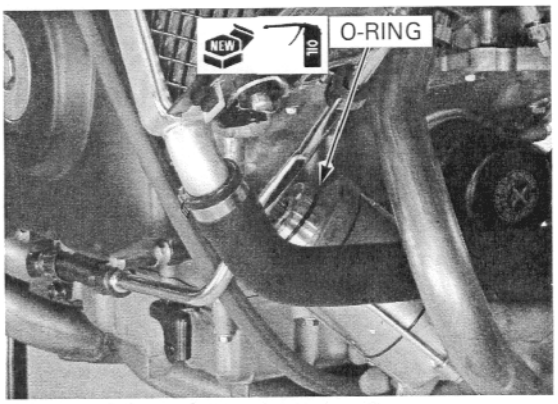

Install and tighten the starter motor mounting bolts.
Route the starter motor cable.

Install the starter motor cable, then tighten the terminal nut.
Install the rubber cap securely.

Install the removed parts in the reverse order of removal.

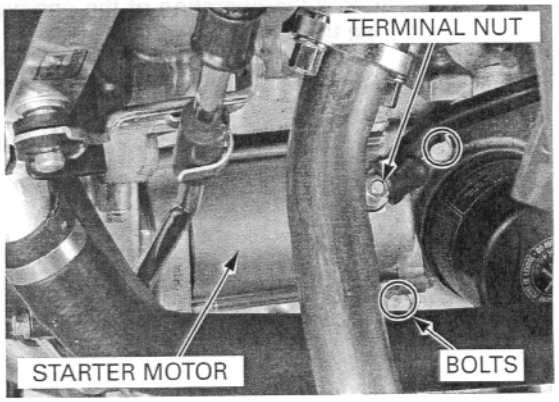

STARTER CLUTCH

REMOVAL

Remove the right crankcase cover (page 9-14).

Remove the starter idle gear shaft and reduction gear shaft.
Remove the starter idle gear and reduction gear.

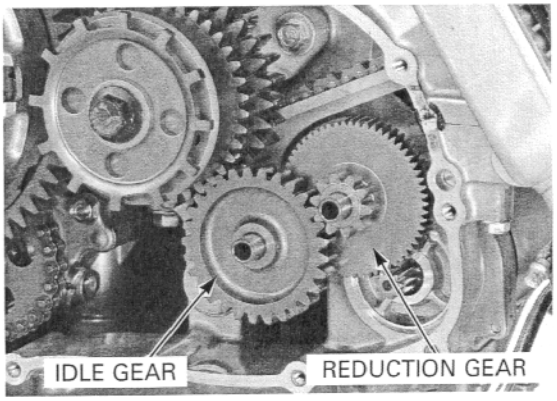

Shift the transmission into 6th gear and apply rear brake.

If the engine is out of the frame, shift the transmission into 6th gear and hold the drive sprocket with the universal holder (07725-0030000).

Loosen and remove the ignition pulse generator/primary drive gear bolt.

Remove the washer, ignition pulse generator rotor and starter clutch assembly.

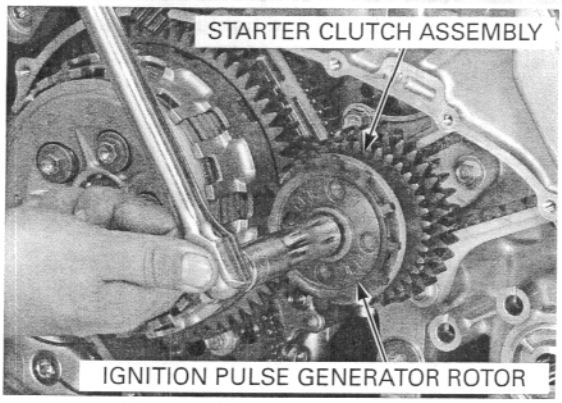

Remove the primary drive gear guide.

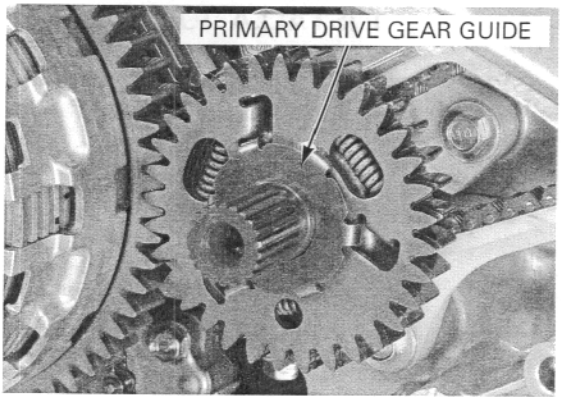

INSPECTION

Check the operation of the one-way clutch by turning the driven gear.
You should be able to turn the driven gear clockwise smoothly, but the gear should not turn counterclockwise.

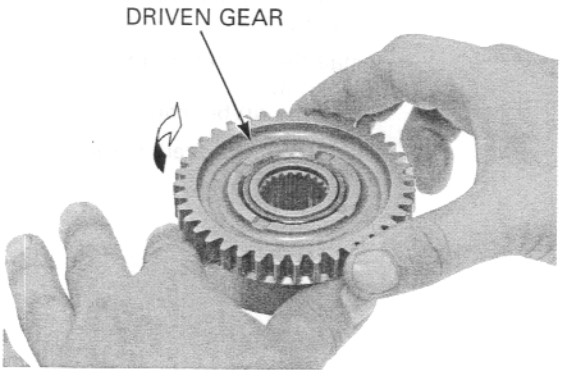

Check the starter reduction gear, idle gear and shafts for wear or other damage.

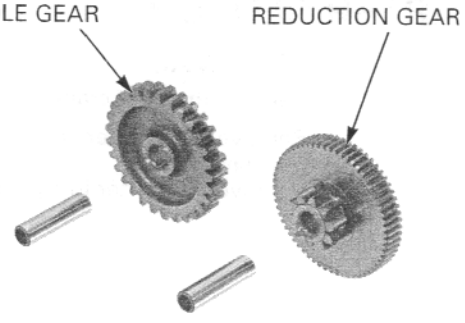

DISASSEMBLY

Remove the starter driven gear while rotating it clockwise.

Remove the needle bearing.

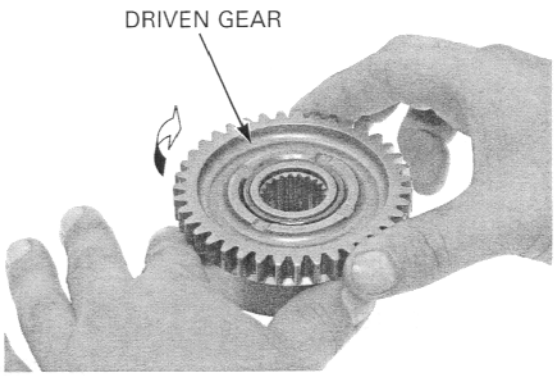

Remove the snap ring.

Remove the one-way clutch from the clutch outer by turning it counterclockwise.

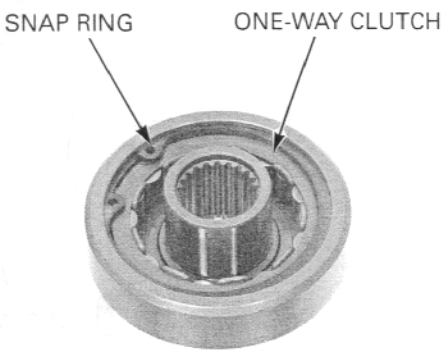

Check the starter driven gear and needle bearing for abnormal wear or damage.

Measure the starter drive gear boss O.D.

SERVICE LIMIT: 45.64 mm (1.797 in)

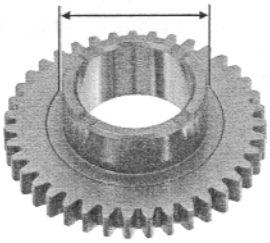

Check the one-way clutch roller for freedom of movement.
Check the rollers and cage for wear or damage, replace if necessary.

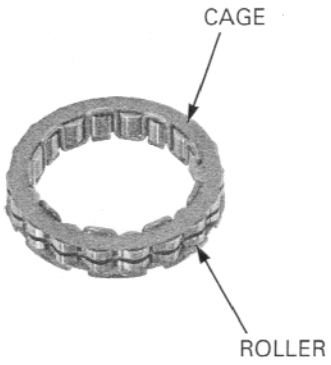

ASSEMBLY

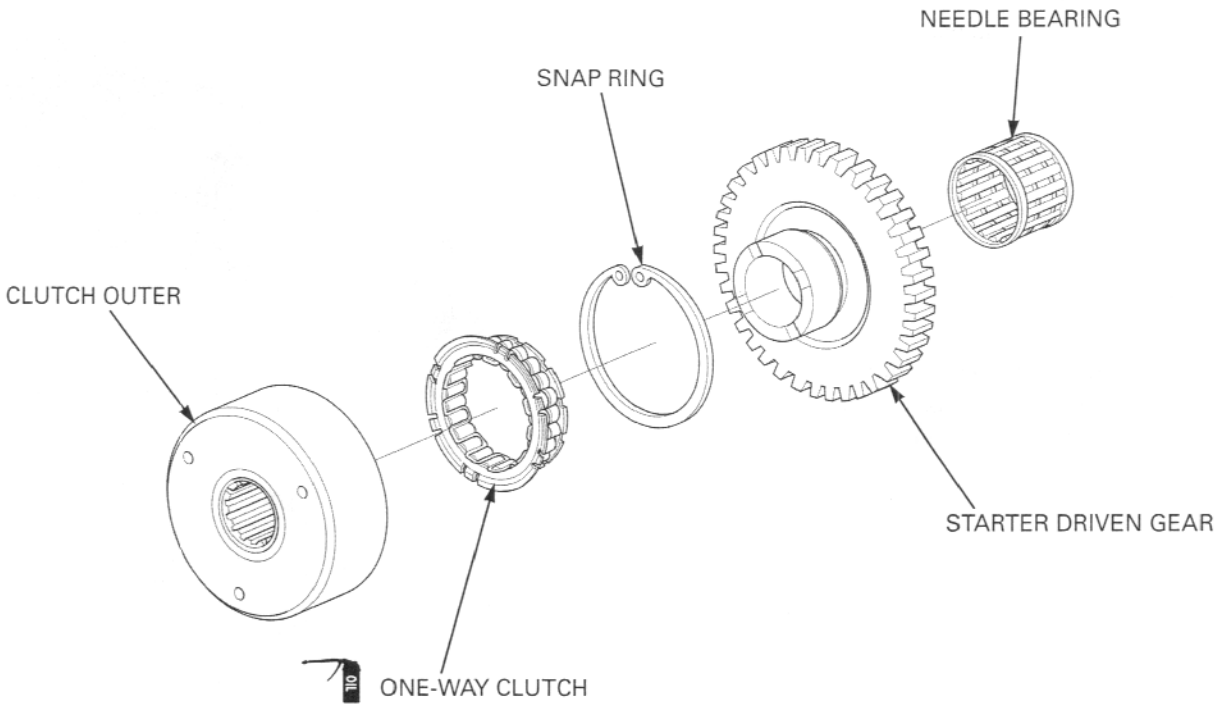

Apply clean engine oil to the starter one-way clutch.

Install the one-way clutch with its flange side facing in.

Install the starter one-way clutch into the clutch outer while rotating it counterclockwise.

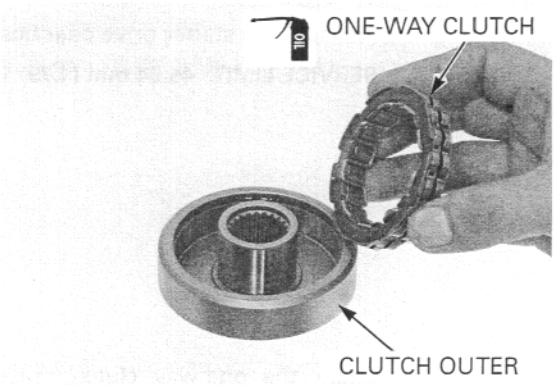

Install the snap ring into the groove of the clutch outer securely.

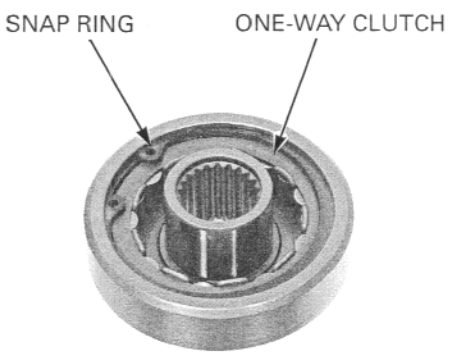

Install the needle bearing.

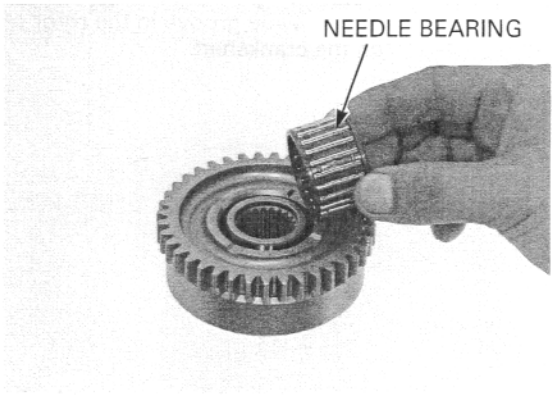

Install the starter driven gear while rotating it clockwise.

Recheck the one-way clutch operation.

You should be able to turn the driven gear clockwise smoothly, but the gear should not turn counterclockwise.

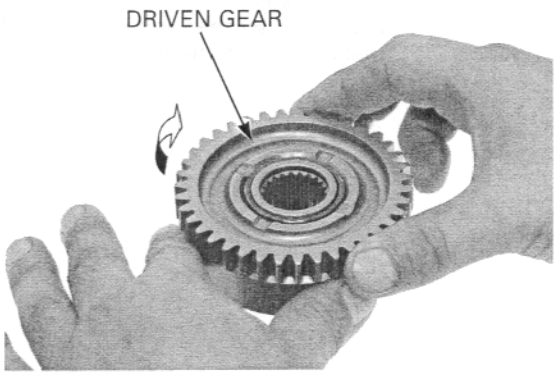

INSTALLATION

Note the installation direction of the primary drive gear guide.

Install the primary drive gear guide onto the crankshaft.

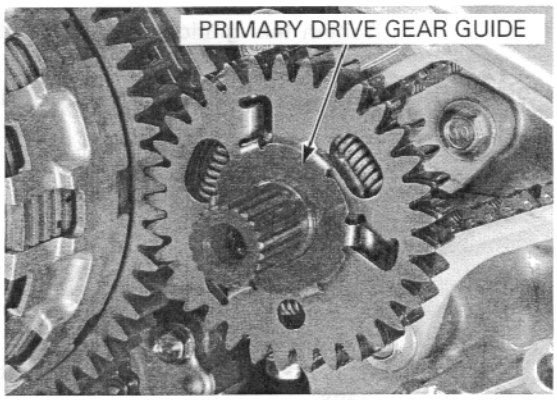

Install the starter clutch assembly while aligning the wide groove in the starter clutch outer with the wide tooth on the crankshaft.

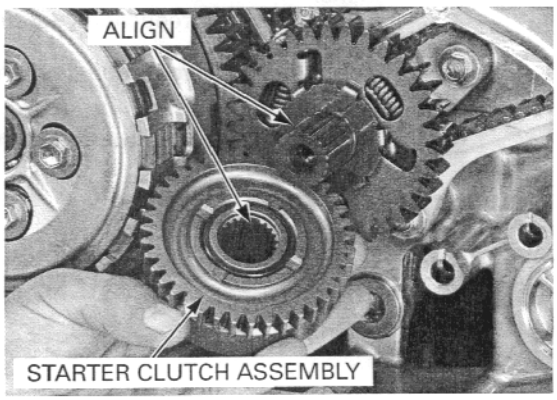

Install the ignition pulse generator rotor while aligning the wide groove in the rotor with the wide tooth on the crankshaft.

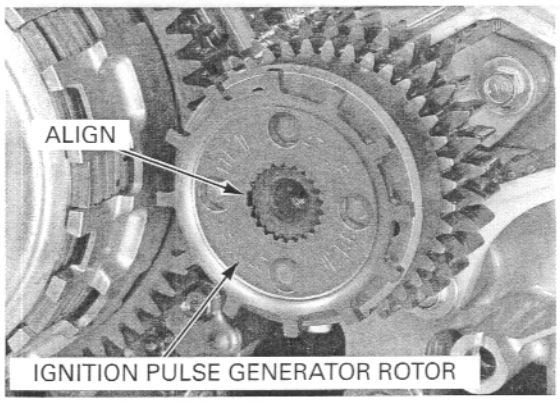

Apply oil to the primary drive gear/starter clutch bolt threads.
Install the washer and ignition pulse generator/primary drive gear flange bolt.

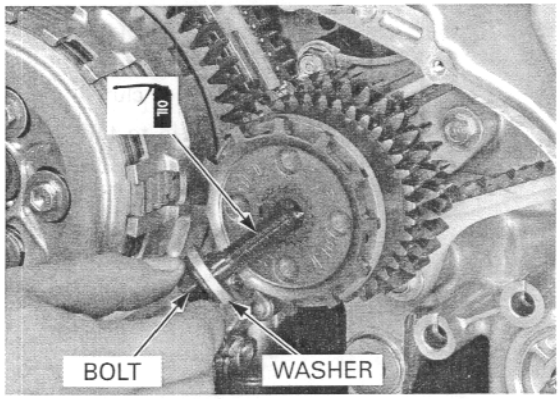

Shift the transmission into 6th gear and apply rear brake.

If the engine is out of the frame, shift the transmission into 6th gear and hold the drive sprocket with the universal holder (07725-0030000).

Tighten the ignition pulse generator/primary drive gear bolt to the specified torque.

TORQUE: 103 N·m (10.5 kgf·m, 76 lbf·ft)

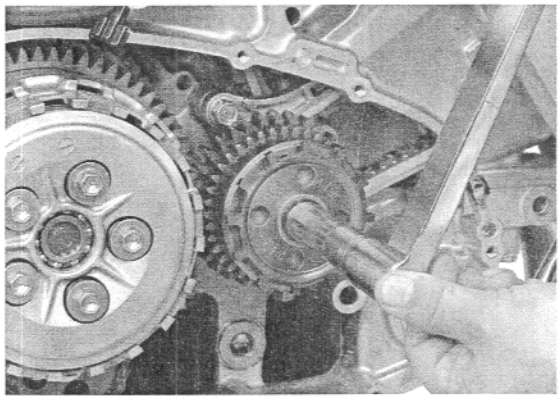

Apply oil to the starter reduction gear, idle gear and shafts.
Install the starter reduction gear and idle gear onto the crankcase.
Install the starter reduction gear shaft and idle gear shaft.

Install the right crankcase cover (page 9-25).

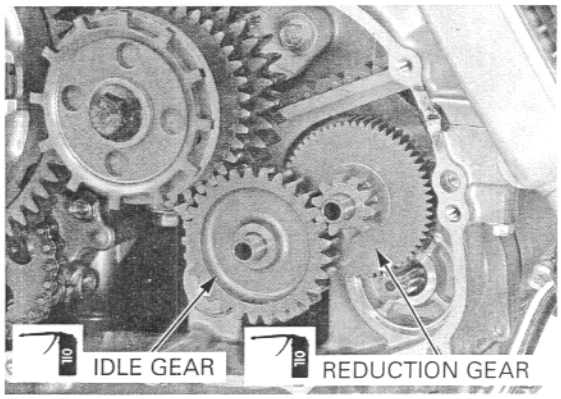

STARTER RELAY SWITCH

OPERATION INSPECTION

Remove the seat (page 2-5).

Shift the transmission into neutral.
Turn the ignition switch ON and engine stop switch to RUN.
Turn the ignition switch ON and engine stop switch to RUN.
The coil is normal if the starter relay switch clicks.

If you don't hear the switch "CLICK", inspect the relay switch using the procedure below.

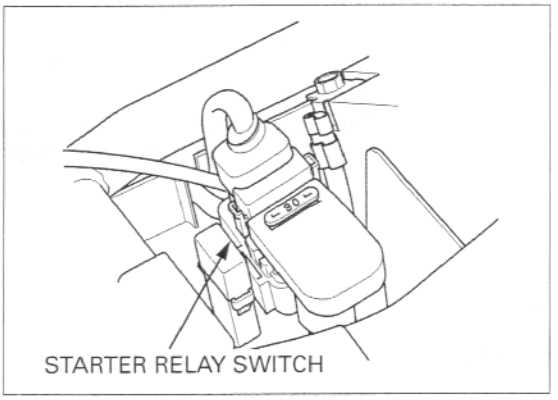

GROUND LINE INSPECTION

Disconnect the starter relay switch 4P connector.

Check for continuity between the Green/Red wire (ground line) and ground.

If there is continuity when the transmission is in neutral or when the clutch is disengaged and the side stand switch is retracted, the ground circuit is normal (In neutral, there is a slight resistance due to the diode).

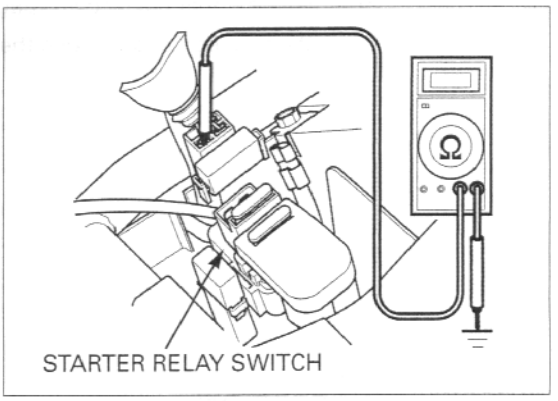

STARTER RELAY VOLTAGE INSPECTION

Connect the starter relay switch 4P connector.

Shift the transmission into neutral.
Measure the voltage between the Yellow/red wire terminal (+) and ground (–).

If the battery voltage appears only when the starter switch is pushed with the ignition switch ON and engine stop switch at RUN, it is normal.

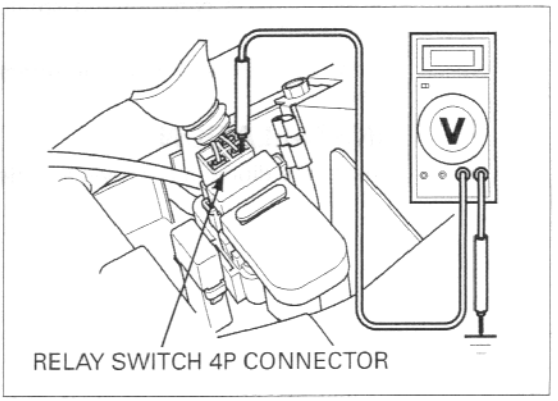

CONTINUITY INSPECTION

Connect an ohmmeter to the starter relay switch large terminals.

Turn the ignition switch to "ON" and the engine stop switch to "RUN".
Check for continuity between the starter relay switch terminals.

There should be continuity when the ignition switch is turned to "ON" and the engine stop switch to "RUN".

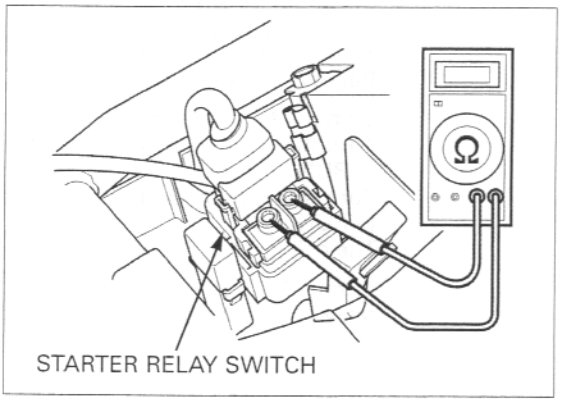

DIODE

REMOVAL

Remove the upper cowl cover (page 2-12).

Open the fuse box and remove the diode.

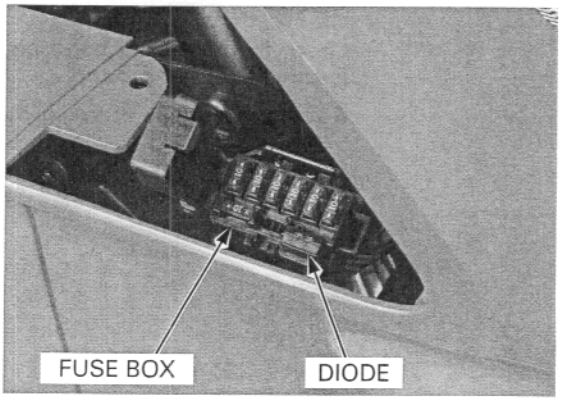

INSPECTION

Check for continuity between the diode terminals. When there is continuity, a small resistance value will register.

If there is continuity, in one direction, the diode is normal.

INSTALLATION

Install the diode in the reverse order of removal.

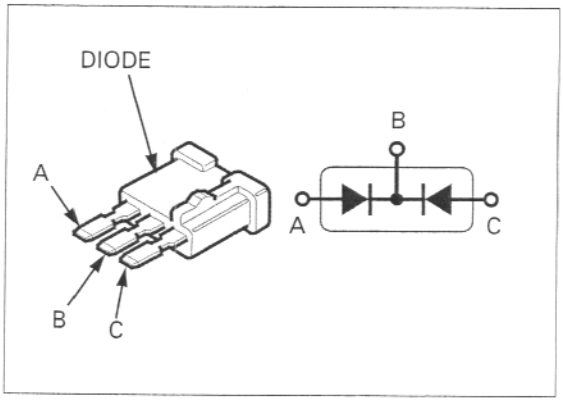

20. LIGHTS/METERS/SWITCHES

SYSTEM LOCATION 20-2

SERVICE INFORMATION 20-3

TROUBLESHOOTING 20-4

HEADLIGHT 20-5

TURN SIGNAL 20-6

TAIL/BRAKE LIGHT 20-7

LICENSE LIGHT 20-8

COMBINATION METER 20-8

OPEN AIR TEMPERATURE SENSOR 20-11

SPEEDOMETER/VEHICLE SPEED SENSOR 20-12

TACHOMETER 20-15

COOLANT TEMPERATURE GAUGE/ SENSOR 20-15

COOLING FAN MOTOR SWITCH 20-17

OIL PRESSURE SWITCH 20-18

FUEL LEVEL SENSOR 20-19

IGNITION SWITCH 20-21

HANDLEBAR SWITCHES 20-22

BRAKE LIGHT SWITCH 20-24

CLUTCH SWITCH 20-24

NEUTRAL SWITCH 20-25

SIDE STAND SWITCH 20-25

HORN 20-26

HEADLIGHT RELAY 20-27

TURN SIGNAL RELAY 20-27

SYSTEM LOCATION

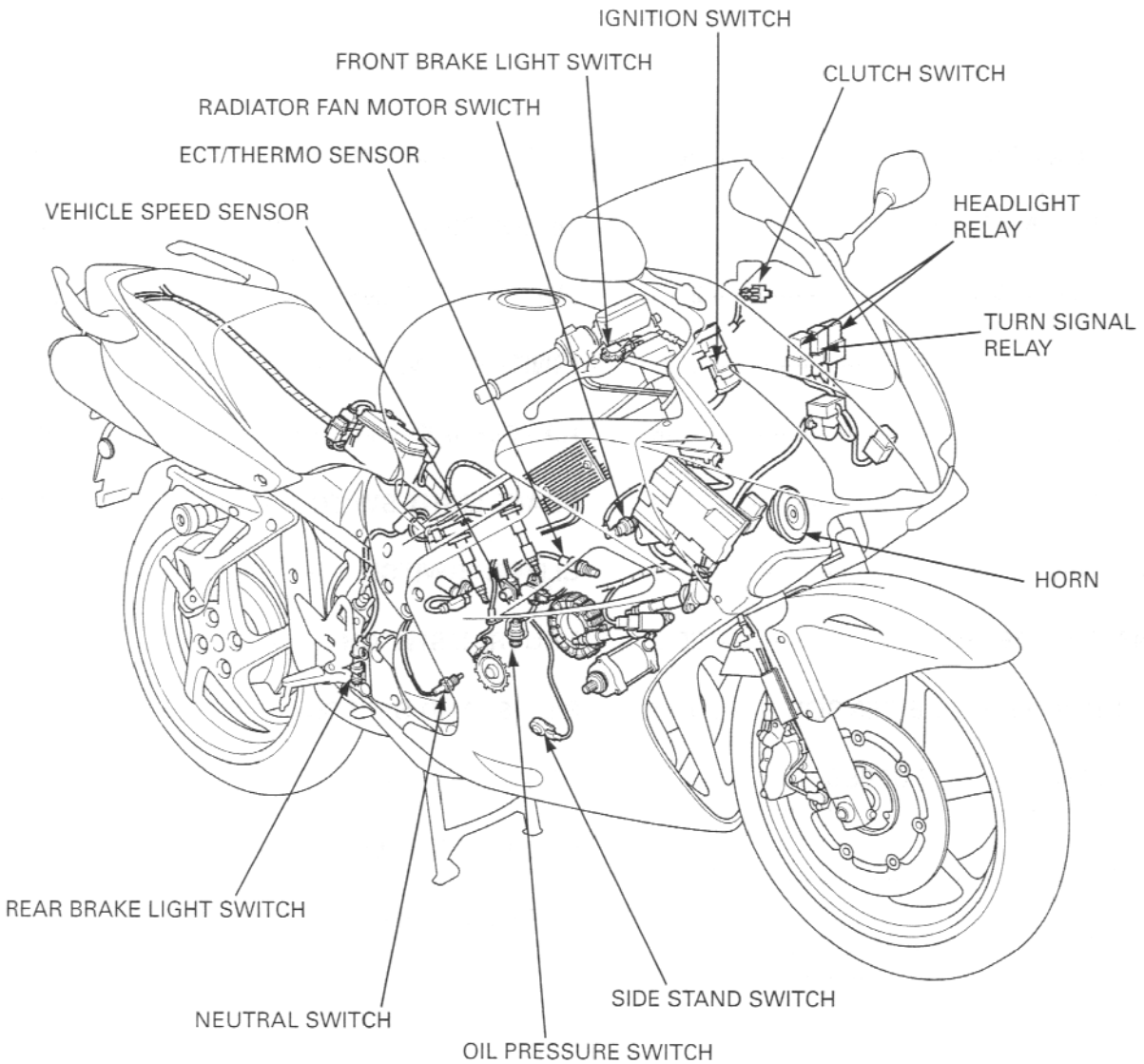

SERVICE INFORMATION

GENERAL

- A halogen headlight bulb becomes very hot while the headlight is ON, and will remain hot for a while after it is turned OFF. Be sure to let it cool down before servicing.
- Use an electric heating element to heat the water/coolant mixture for the fan motor switch inspection. Keep flammable materials away from the electric heating element. Wear protective clothing, insulated gloves and eye protection.
- Note the following when replacing the halogen headlight bulb.
  - Wear clean gloves while replacing the bulb. Do not put finger prints on the headlight bulb, as they may create hot spots on the bulb and cause is to fail.
  - If you touch the bulb with your bare hands, clean it with a cloth moistened with alcohol to prevent its early failure.
  - Be sure to install the dust cover after replacing the bulb.
- Check the battery condition before performing any inspection that requires proper battery voltage.
- A continuity test can be made with the switches installed on the motorcycle.
- The following color codes are used throughout this section.

Bu = Blue	G = Green	Lg = Light green	R = Red
Bl = Black	Gr = Gray	O = Orange	W = White
Br = Brown	Lb = Light blue	P = Pink	Y = Yellow

SPECIFICATIONS

ITEM			SPECIFICATIONS
Bulbs	Headlight	Hi	12V – 55 W X 2
		Lo	12V – 55 W X 2
	Brake/tail light		12V – 21/5 W X 2
	Front turn signal/running light		12V – 21/5 W X 2
	Rear turn signal light		12V – 21 W X 2
	License light		12V – 4 CP
	Instrument light		LED
	Turn signal indicator		LED
	High beam indicator		LED
	Neutral indicator		LED
	Oil pressure indicator		LED
	PGM-FI malfunction indicator		LED
Fuse	Main fuse		30 A
	PGM-FI fuse		30 A
	Sub fuse (Standard type)		10 A X 4, 20A X 2
	Sub fuse (ABS type)		10 A X 5, 20A X 2, 30A X 2
Tachometer peak voltage			10.5 V minimum
Coolant temperature sensor resistance (50°C/122°F)			6.8 – 7.2 Ω
Open air temperature sensor resistance (25°C/77°F)			4.8 – 5.2 Ω
Fan motor switch	Start to close (ON)		98 – 102 °C (208 – 216 °F)
	Stop to open		93 – 97 °C (199 – 207 °F)

TORQUE VALUES

Ignition switch mounting bolt	26 N·m (2.7 kgf·m, 20 lbf·ft)	
Side stand switch bolt	10 N·m (1.0 kgf·m, 7 lbf·ft)	ALOC bolt; replace with a new one
Coolant temperature/ECT sensor	23 N·m (2.3 kgf·m, 17 lbf·ft)	
Fan motor switch	18 N·m (1.8 kgf·m, 13 lbf·ft)	
Oil pressure switch	12 N·m (1.2 kgf·m, 9 lbf·ft)	Apply sealant to the threads
Neutral switch	12 N·m (1.2 kgf·m, 9 lbf·ft)	

TROUBLESHOOTING

SPEED SENSOR/SPEEDOMETER

The odometer/trip meter operates normally, but the speedometer does not operate
Faulty speedometer

The speedometer operates normally, but the odometer/trip meter does not operate
Faulty odometer/trip meter

The speedometer operation is abnormal

1. **Fuse Inspection**

   Check for blown main fuse or sub fuse.

   Is the fuse blown?

   YES – Replace the fuse

   NO – GO TO STEP 2.

2. **Battery Inspection**

   Make sure the battery is fully charged and in good condition.

   Is the battery in good condition?

   YES – Replace the fuse

   NO – GO TO STEP 3.

3. **Speed Sensor Power Input Voltage Inspection (Vehicle Speed Sensor Side)**

   Check for loose or poor contact of the speed sensor 3P (Natural) connector.

   With the ignition switch "ON" and measure the voltage at the vehicle speed sensor connector.

   Is there battery voltage?

   NO – • Loose or poor contact of related terminals
   • Open circuit in Black/brown or Green/black wires between the battery and vehicle speed sensor

   YES – GO TO STEP 4.

4. **Speed Sensor Power Input Voltage Inspection (Combination Meter Side)**

   Check for loose or poor contact of the combination meter multi-connectors.

   With the ignition switch "ON", measure the voltage at bottom of the speedometer terminals.

   Is there battery voltage?

   NO – • Loose or poor contact of related terminals
   • Open circuit in Black/brown or Green/black wires between the battery and speed sensor

   YES – GO TO STEP 5.

5. **Speed Sensor Signal Line Inspection**

   With the ignition switch "OFF", check for continuity of the Pink/green wire between the terminals of the speed sensor and speedometer.

   Is there continuity?

   NO – Open circuit in Pink/green wire

   YES – GO TO STEP 6.

6. **Speed Sensor Signal Inspection**

   Support the motorcycle using a hoist or other support to raise the rear wheel off the ground.

   Measure the output voltage (sensor signal) at the speedometer with the ignition switch "ON" while slowly turning the rear wheel by your hand.

   CONNECTION: Pink (+) – Green (-)
   STANDARD: Repeat 0 to 5 V

   Is the voltage within specified value?

   NO – • Faulty speed sensor
   • Loose speed sensor mounting bolts

   YES – Faulty speedometer

HEADLIGHT

BULB REPLACEMENT

Remove the upper cowl cover (page 2-12).

Disconnect the headlight bulb connectors.
Remove the dust cover.

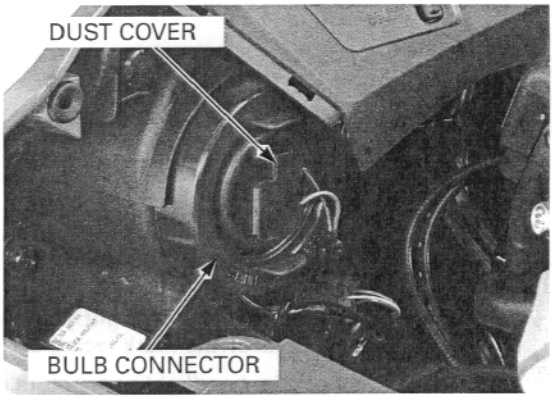

Avoid touching halogen headlight bulb. Finger prints can create hot spots that cause a bulb to break.

Unhook the bulb retainer and remove the headlight bulb/socket.

If you touch the bulb with your bare hands, clean it with cloth moistened with denatured alcohol to prevent early bulb failure.

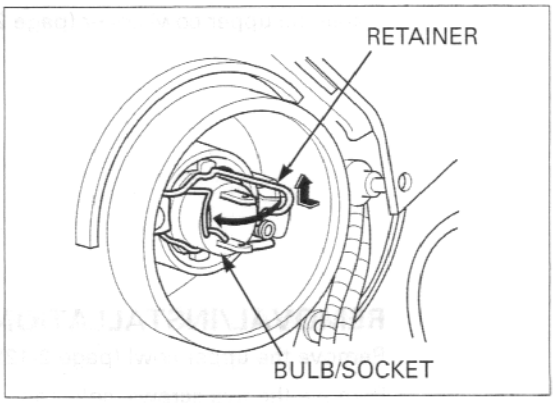

Remove the headlight bulb from the socket.

Install a new bulb into the socket.

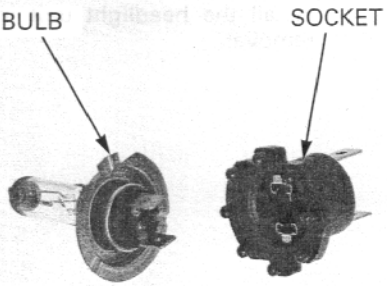

Install the new headlight bulb/socket aligning its tabs with the groove in the headlight unit.

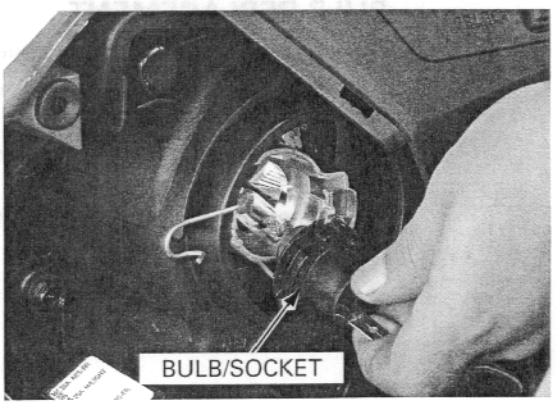

Hook the bulb retainer into the headlight unit groove.

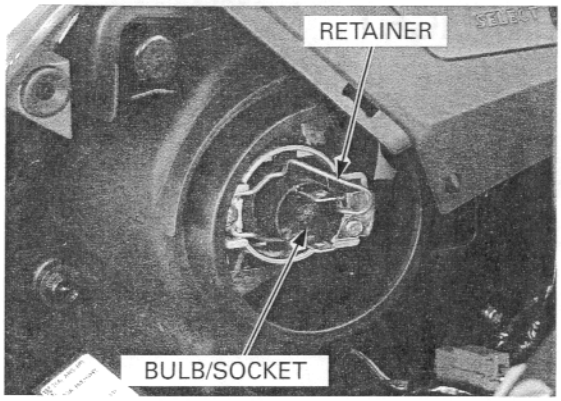

Install the dust cover tightly against the headlight unit with its arrow mark facing up.

Connect the headlight connectors.

Install the upper cowl cover (page 2-14).

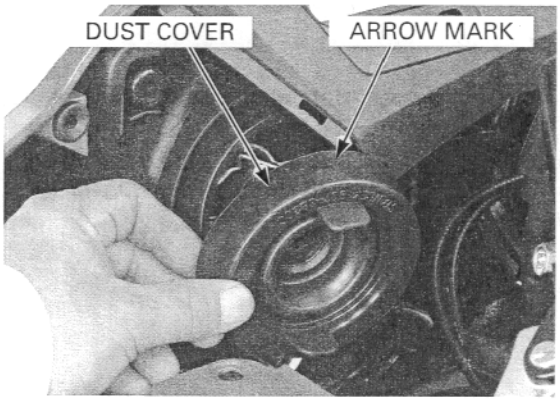

REMOVAL/INSTALLATION

Remove the upper cowl (page 2-12).

Remove the five screws, collar and headlight unit.

Install the headlight unit in the reverse order of removal.

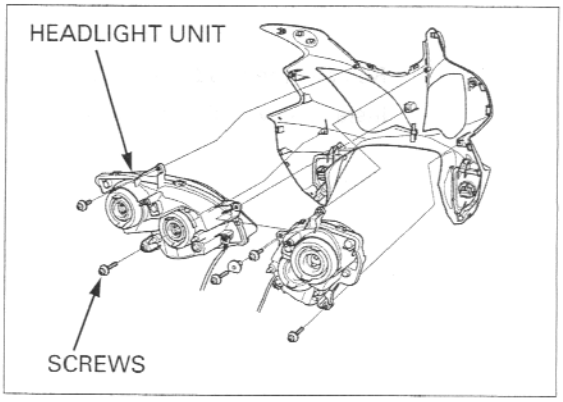

TURN SIGNAL

BULB REPLACEMENT

Remove the trim clip and turn signal bulb lid.

Turn the bulb socket counterclockwise and remove it from the turn signal unit.

Remove the bulb from the socket and replace it with a new one.

Install the turn signal bulb socket in the reverse order of removal.

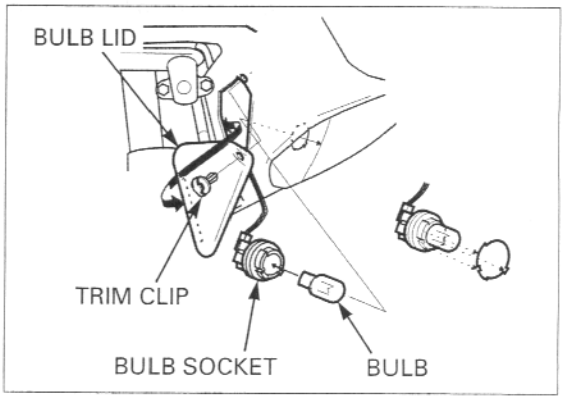

REMOVAL/INSTALLATION

For front turn signal unit removal, see upper cowl removal (page 2-12).
For rear turn signal removal, remove the seat (page 2-5) / rear cowl (page 2-5).

Remove the screws and rear combination light unit from the rear cowl.

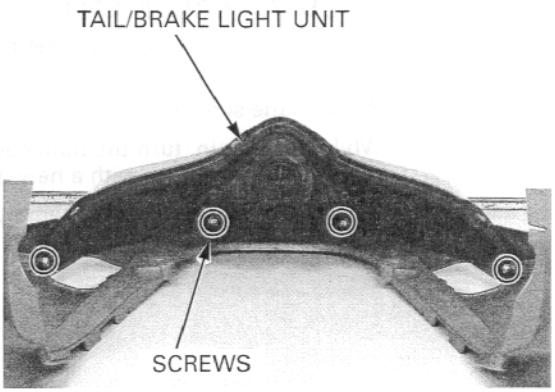

TAIL/BRAKE LIGHT

BULB REPLACEMENT

Remove the seat (page 2-5).

Turn the bulb sockets counterclockwise, then remove the bulb sockets.

Remove the bulb and replace them with new ones.

Install the tail/brake light sockets in the reverse order of removal.

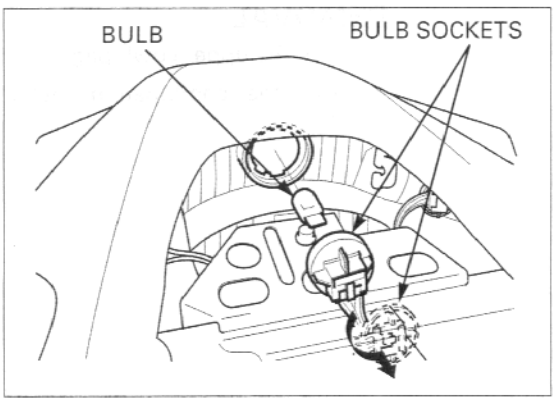

REMOVAL/INSTALLATION

Remove the rear cowl (page 2-5).

Remove the screws and rear combination light unit.

Installation is in the reverse order of removal.

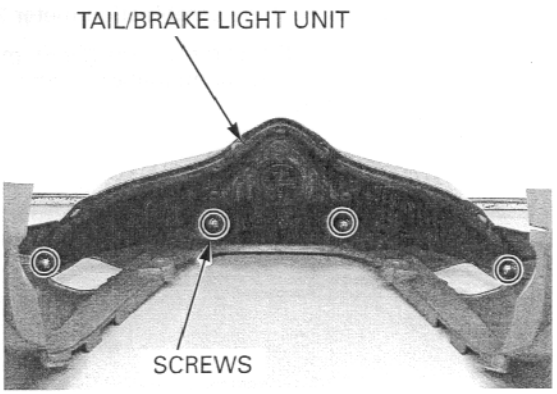

LICENSE LIGHT

BULB REPLACEMENT

Remove the license light bracket mounting nuts and washers, remove the bracket assembly.

Remove the screws, license light cover and lens.

While pushing in, turn the bulb counterclockwise to remove it and replace with a new one.

Install the license light assembly in the reverse order of removal.

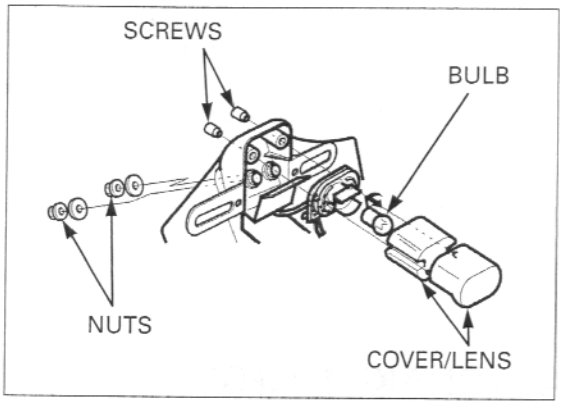

COMBINATION METER

REMOVAL

Remove the upper cowl (page 2-12).

Remove the combination meter connector dust cover.

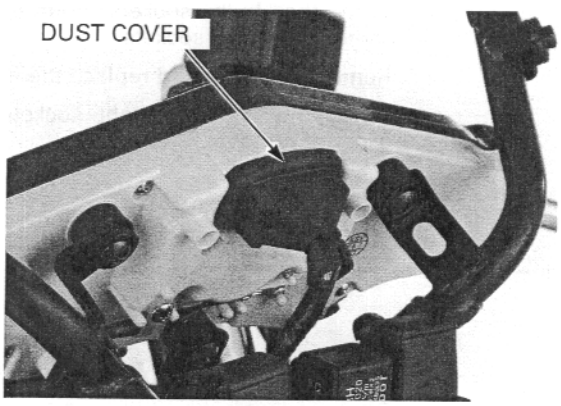

Disconnect the combination meter 20P connector.

Remove the combination meter mounting screws, washers and combination meter from the upper cowl stay.

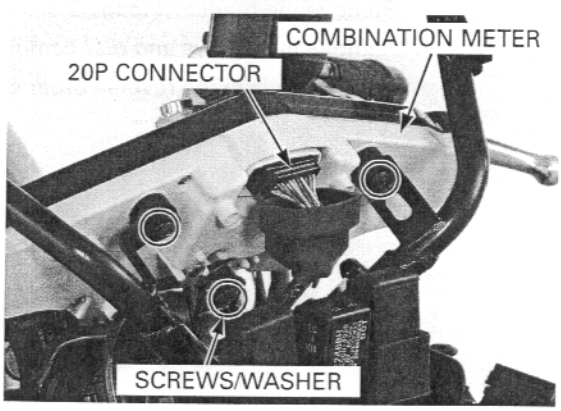

DISASSEMBLY/ASSEMBLY

Remove the screws and clamp, and then remove the open air temperature sensor from the combination meter.

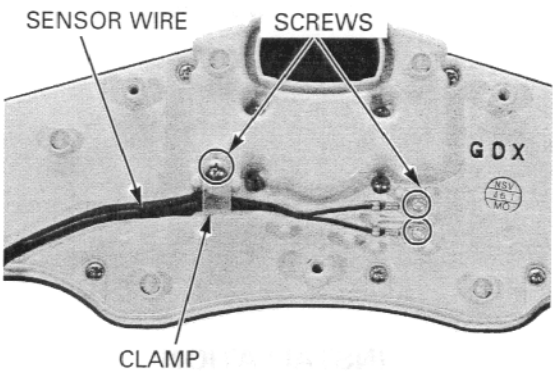

Remove the screws and combination meter rear cover.

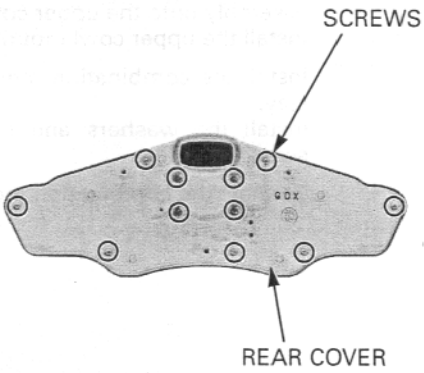

Remove the combination meter print board assembly from the front cover.

Install the print board assembly into the front cover.

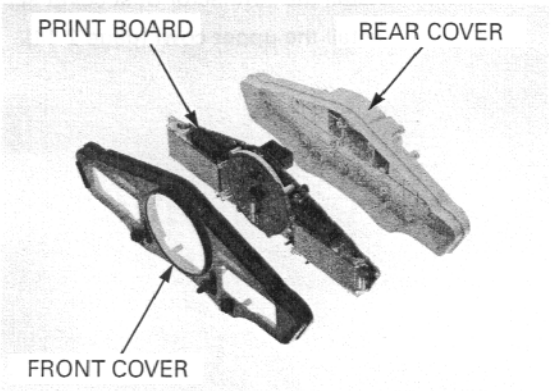

Install the rear cover and tighten the screws securely.

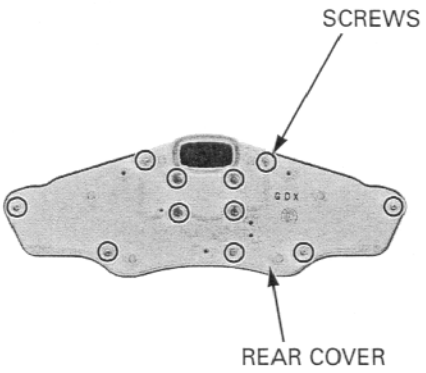

Connect the open air temperature sensor wire to the combination meter and tighten the screws and clamp screw securely.

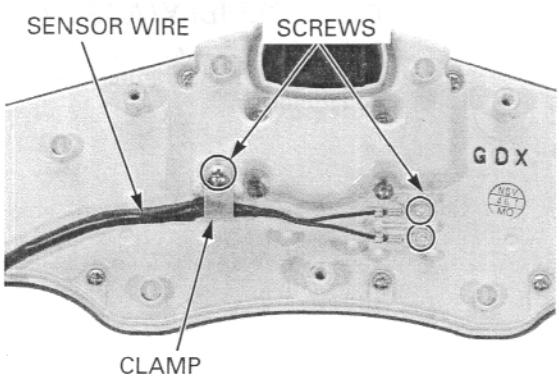

INSTALLATION

Be careful not to damage the open air temperature wire.

Install the upper cowl and combination meter as an assembly onto the upper cowl stay.
Install the upper cowl mounting nuts.

Install the combination meter onto the upper cowl stay.
Install the washers and screws and tighten the screws securely.

Connect the combination meter 20P connector.

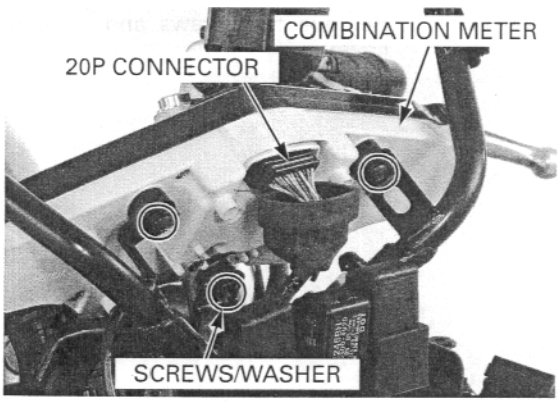

Install the connector dust cover securely.

Install the upper cowl (page 2-14).



POWER/GROUND LINE INSPECTION

Disconnect the combination meter 20P connector.
Check the following at the wire harness side connector terminals of the combination meter.

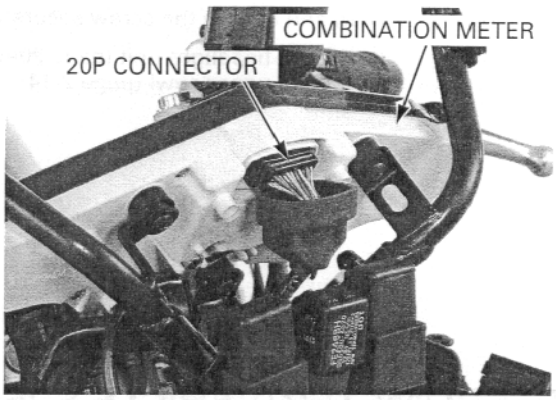

Power input line

Measure the voltage between the Brown/blue wire terminal (+) and Ground (–).
There should be battery voltage with the ignition switch "ON".
If there is no voltage, check for open circuit in Brown/Blue wire.

Back-up voltage line

Measure the voltage between the Red/green wire terminal (+) and Ground (–).
There should be battery voltage at all times.
If there is no voltage, check for open circuit in Red/green wire.

Ground line

Measure the continuity between the Green wire terminal (+) and Ground (–).
There should be continuity.
If there is no continuity, check for open circuit in Green wire.

OPEN AIR TEMPERATURE SENSOR

REMOVAL

Remove the upper cowl (page 2-12).
Remove the headlight unit (page 20-6)

Remove the screw and open air temperature sensor from the upper cowl.

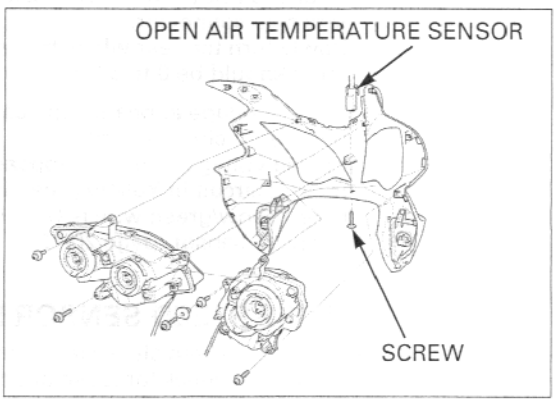

INSPECTION

Remove the open air temperature sensor from the combination meter (page 20-9).

Measure the resistance between the open air temperature sensor terminals.

STANDARD: 4.8 - 5.2 Ω (25°C/77°F)

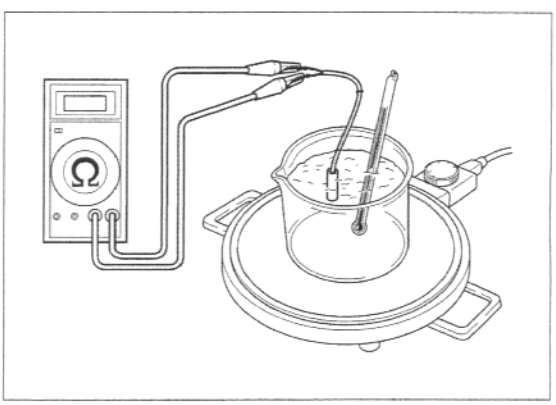

INSTALLATION

Install the open air temperature sensor to the upper cowl and tighten the screw securely.

Install the headlight unit (page 20-6).
Install the upper cowl (page 2-14).

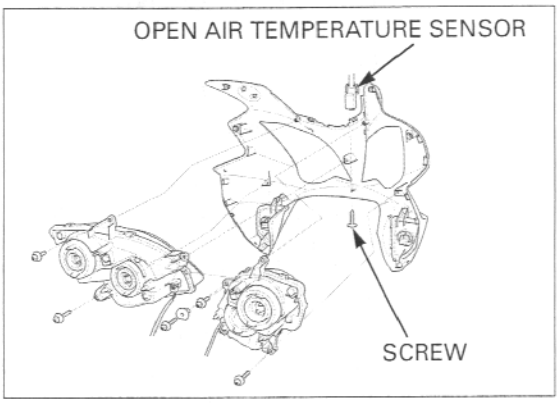

SPEEDOMETER/VEHICLE SPEED SENSOR

SYSTEM INSPECTION

Check that the tachometer and coolant temperature meter function properly.

- If they do not function, perform the power and ground line inspection of the combination meter (page 20-11).
- If they function, shift the transmission into neutral, disconnect the combination meter 20P connector and turn the ignition switch ON.
  Measure the voltage between the Yellow/green (+) and Black (–) wire terminals of the wire harness side connector.
  Slowly turn the rear wheel by hand.
  There should be 0 to 5 V pulse voltage.

– If pulse voltage appears, replace the combination meter print circuit board.
– If pulse voltage does not appear, check for open or short circuit in Yellow/green wire.
  If the Yellow/green wire is OK, check for the vehicle speed sensor (page 20-12).

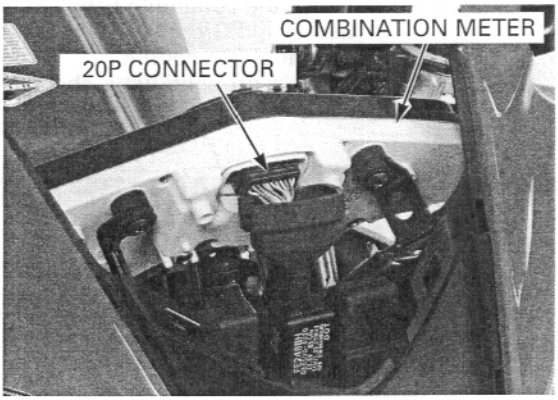

VEHICLE SPEED SENSOR INSPECTION

Disconnect the vehicle speed sensor 3P (Natural) connector and check for loose or poor contact of the connector.

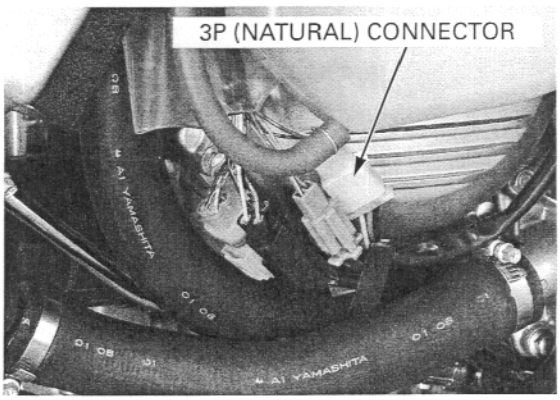

Connect the vehicle speed sensor 3P (Natural) connector.

Turn the ignition switch "ON" and measure the voltage at the 3P (Natural) connector with the connector connected.

CONNECTION: Black (+) – Green (–)
STANDARD: Battery voltage

If there is no voltage, check for open circuit in Black and Green wire and loose contact of the wire harness connectors.

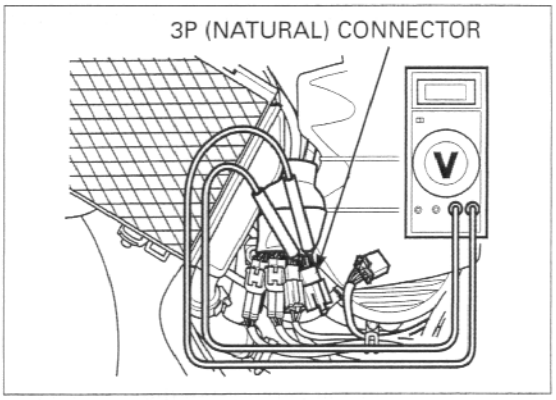

Support the motorcycle securely and place the rear wheel off the ground.
Shift the transmission into neutral.
Connect the vehicle speed sensor 3P (Natural) connector.

Measure the voltage at the sensor connector terminals with the ignition switch "ON" while slowly turning the rear wheel by hand.

CONNECTION: Pink (+) – Green (–)
STANDARD: Repeat 0 to 5V

If the measurement is out of specification, replace the vehicle speed sensor.

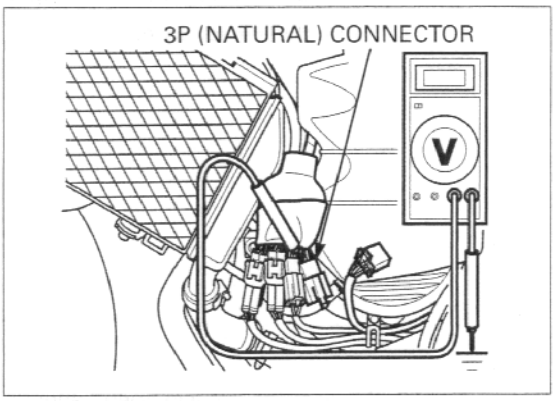

REMOVAL/INSTALLATION

Remove the side cowl (page 2-8).

Disconnect the vehicle speed sensor 3P (Natural) connector.

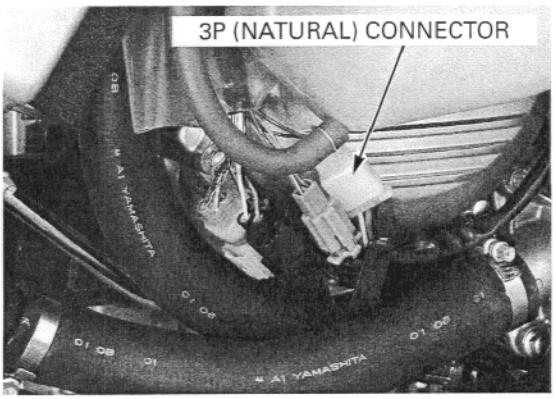

Remove the bolts and vehicle speed sensor.

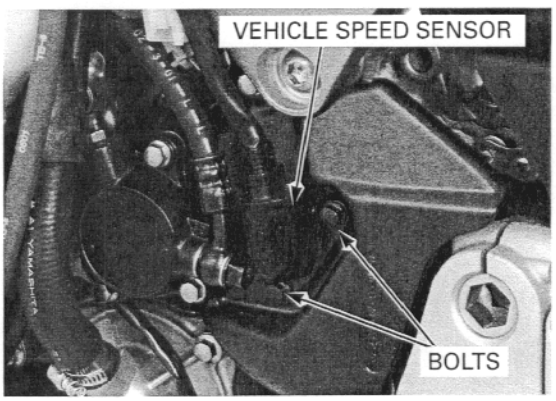

Install the vehicle speed sensor while aligning its hexagonal portion with the drive sprocket bolt.

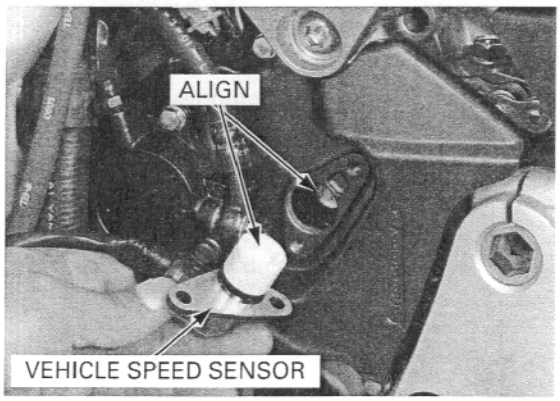

Install and tighten the mounting bolts securely.

Route the sensor wire.

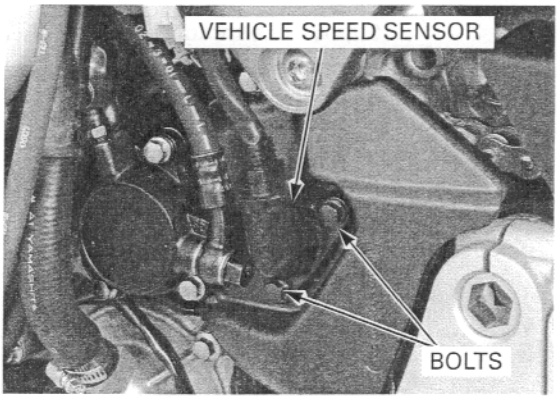

Connect the vehicle speed sensor 3P (Natural) connector.

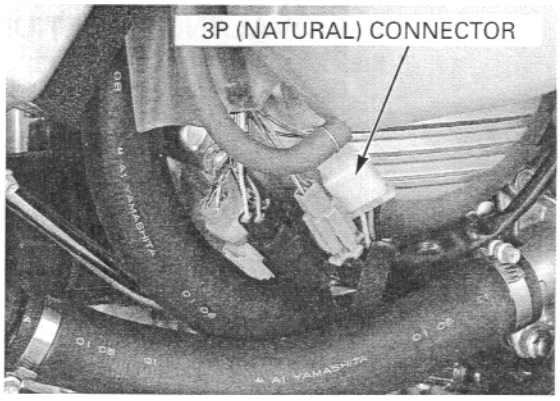

TACHOMETER

SYSTEM INSPECTION

Remove the combination meter connector cover.
Connect the peak voltage tester or peak voltage adaptor to the tachometer Yellow/green (+) terminal and Green (–).

TOOLS:
Peak voltage tester (U.S.A. only) or
Peak voltage adaptor 07HGJ-0020100
with commercially available digital multimeter (impedance 10 MΩ/DCV minimum)

CONNECTION: Yellow/green (+) and Ground (-)

Start the engine and measure the tachometer input peak voltage.

PEAK VOLTAGE: 10.5 V minimum

If the value is normal, replace the tachometer.
If the measured value is below 10.5 V, replace the ECM.

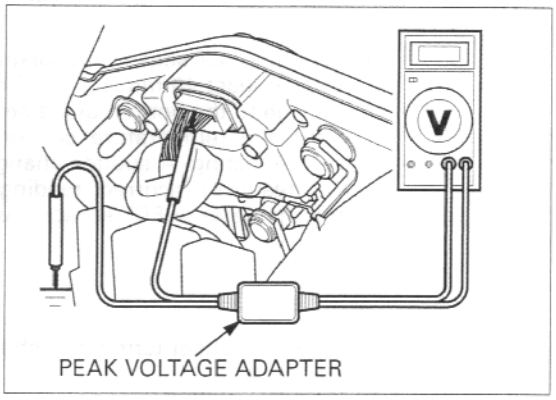

If the value is 0 V, check for continuity between the combination meter 20P connectors terminal and the ECM 26P (Light gray) multi-connector Yellow/Green terminals.
If there is no continuity, check the wire harness and combination meter sub-harness for an open circuit.
If there is continuity, replace the combination meter printed circuit board (page 20-9).

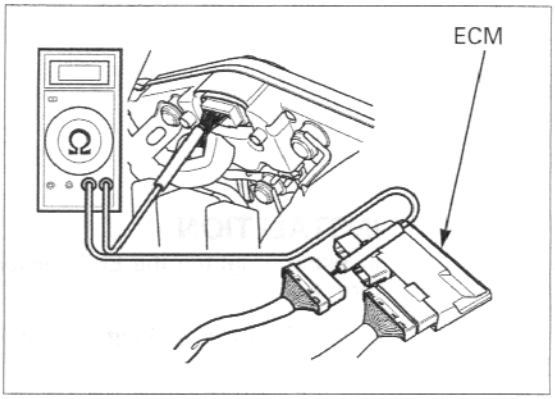

COOLANT TEMPERATURE GAUGE/ SENSOR

REMOVAL

Drain the coolant (page 6-6).
Remove the throttle body (page 5-63).

Disconnect the ECT sensor wire connector from the sensor.

Remove the ECT sensor and sealing washer from the front cylinder head.

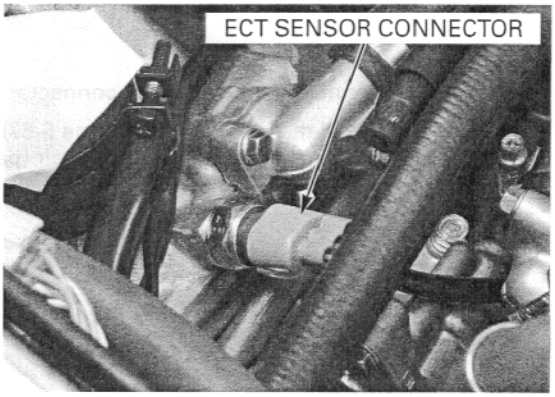

THERMO SENSOR UNIT INSPECTION

Suspend the ECT sensor in a pan of coolant (50 – 50 mixture) an electric heating element and measure the resistance through the sensor as the coolant heats up.

- Soak the ECT sensor in coolant up to its threads with at least 40 mm (1.6 in) from the bottom of the pan to the bottom of the sensor.
- Keep the temperature constant for 3 minutes before testing. A sudden change of temperature will result in incorrect readings. Do not let the thermometer or ECT sensor touch the pan.

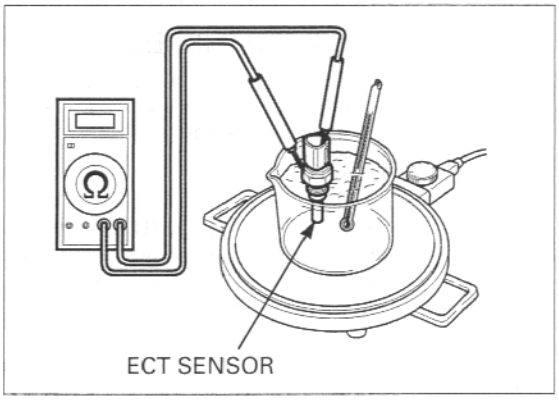

The thermo sensor terminal is shown in the illustration.

Replace the sensor if it is out of specification by more than 10% at any temperature listed.

Temperature	80°C (68°F)	120°C (248°F)
Resistance	2.1 – 2.6 kΩ	0.65 – 0.73 kΩ

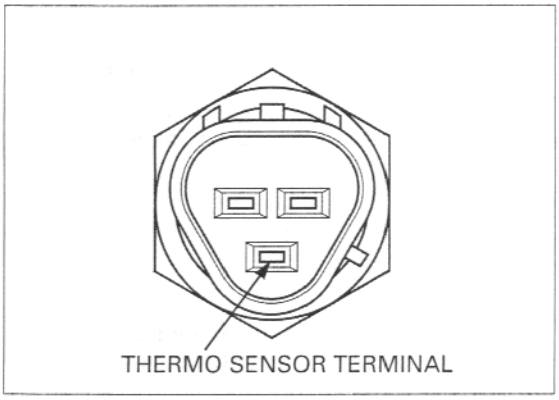

INSTALLTION

Always replace the sealing washer with a new one.

Install and tighten the ECT sensor to the specified torque.

TORQUE: 23 N·m (2.3 kgf·m, 17 lbf·ft)

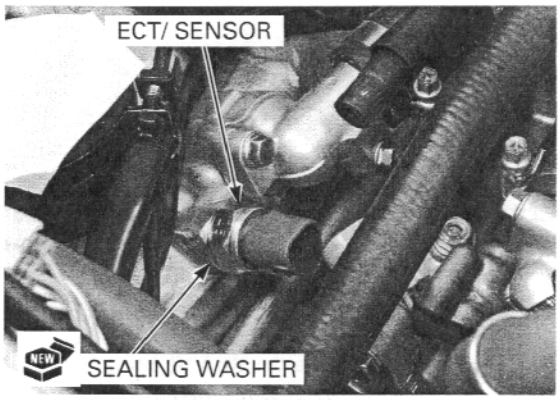

Connect the ECT sensor connector.

Install the throttle body (page 5-67).
Fill the system and bleed the air (page 6-6).

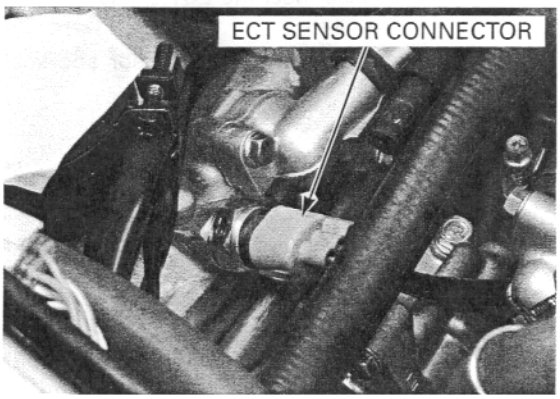

COOLING FAN MOTOR SWITCH

INSPECTION

Remove the side cowl (page 2-8).

Check for a blown fuse before inspection.

Fan motor does not stop

Turn the ignition switch OFF, disconnect the connector from the fan motor switch and turn the ignition switch ON again.

If the fan motor does not stop, check for a shorted wire between the fan motor and switch.
If the fan motor stops, replace the fan motor switch.

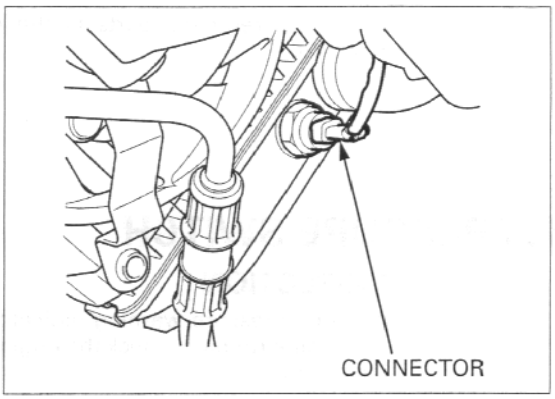

Fan motor does not start

Before testing, warm up the engine to operating temperature.

Disconnect the connector from the fan motor switch and ground the connector to the body with a jumper wire.
Turn the ignition switch "ON" and check the fan motor.

If the motor starts, check the connection at the fan motor switch terminal.
It is OK, replace the fan motor switch.

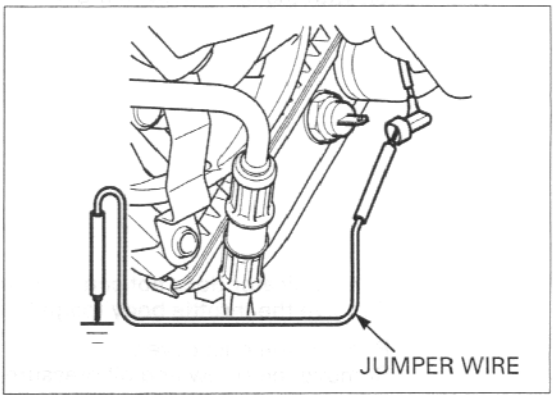

If the motor does not start, check for voltage between the fan motor switch connector and ground.
If battery voltage is measured, replace fan motor.
If there is no battery voltage, check for poor connection of the connector or broken wire harness.

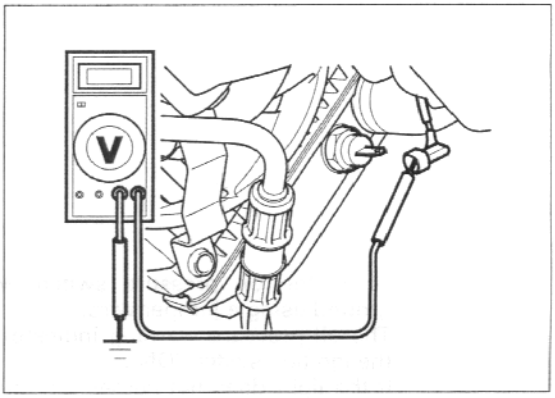

REMOVAL/INSTALLATION

Disconnect the fan motor switch connector and remove the switch.

Install a new O-ring onto the fan motor switch.
Apply sealant to the fan motor switch threads.
Install and tighten the fan motor switch.

TORQUE: 18 N·m (1.8 kgf·m, 13 lbf·ft)

Install the removed parts in the reverse order of removal.

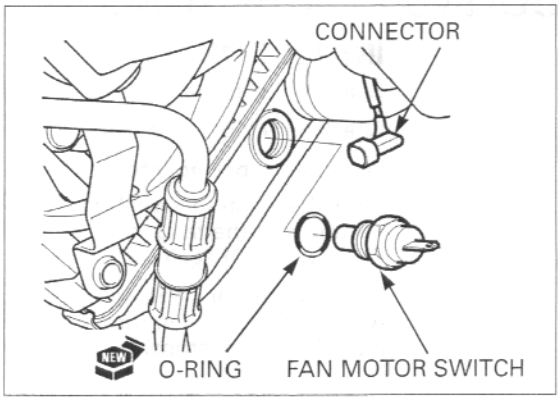

OIL PRESSURE SWITCH

INSPECTION

If the oil pressure warning indicator stays on while the engine running, check the engine oil level before inspection.

Make sure the oil pressure warning indicator comes on with the ignition switch ON.

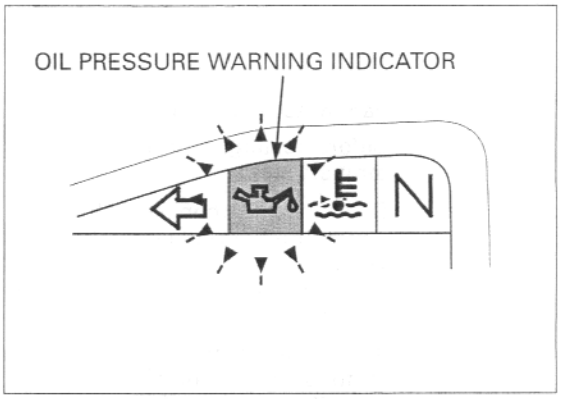

If the indicator does not come on, inspect as follow:
Remove the throttle body (page 5-63).

Remove the dust cover.
Remove the screw and oil pressure switch terminal.

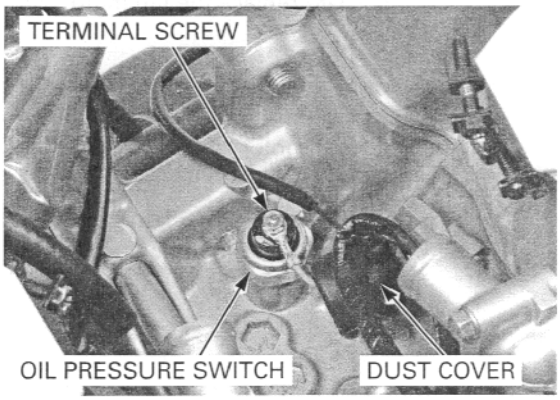

Short the oil pressure switch wire terminal to ground using a jumper wire.
The oil pressure warning indicator comes on with the ignition switch "ON".
If the light does not comes on, check the sub-fuse (10A) and wires for a loose connection or an open circuit.

Start the engine and make sure that the light goes out.
If the light does not go out, check the oil pressure (page 4-5).
If the oil pressure is normal, replace the oil pressure switch (page 20-19).

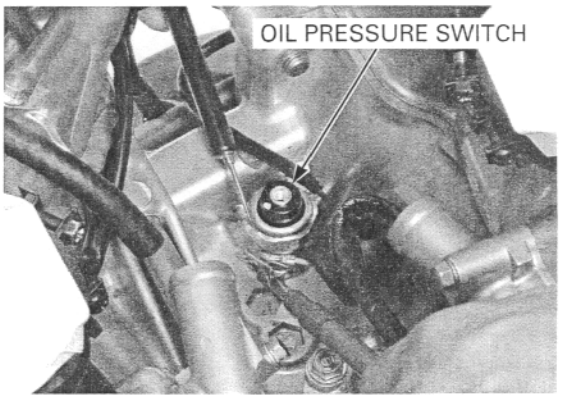

REMOVAL/INSTALLATION

Remove the boot, terminal screw and wire terminal (page 20-18).
Remove the oil pressure switch from the crankcase.

Apply sealant to the oil pressure switch threads as shown.

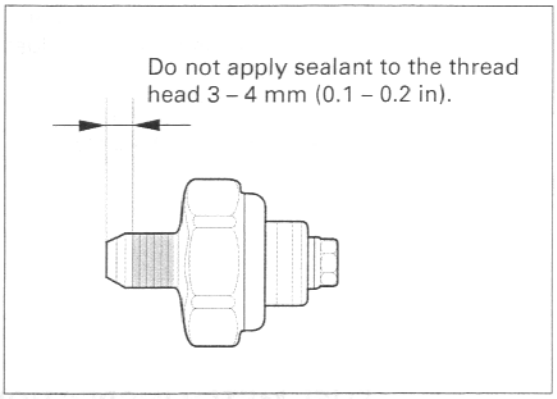

Install the oil pressure switch onto the crankcase, tighten it to the specified torque.

TORQUE: 12 N·m (1.2 kgf·m, 9 lbf·ft)

Connect the oil pressure switch terminal to the switch and tighten the screw.

Install the dust cover.

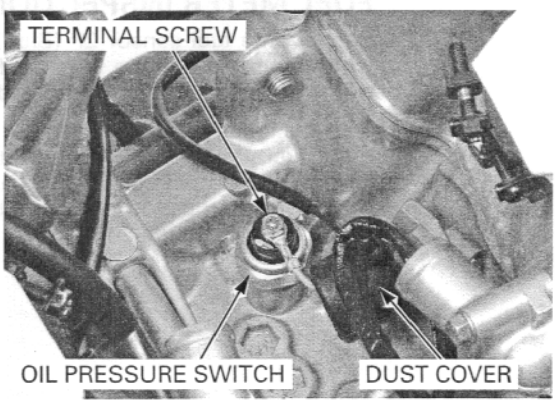

FUEL LEVEL SENSOR

REMOVAL

Open and support the fuel tank using the equipped tools (page 3-5).

Disconnect the fuel reserve sensor 2P (Blue) connector.
Remove the fuel tank without disconnecting the fuel lines (page 8-6).

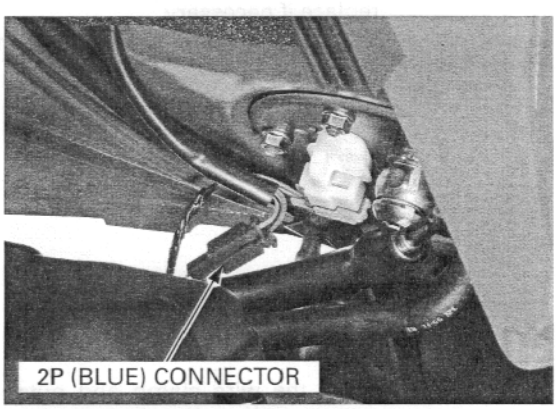

Be careful not to damage the float arm.

Remove the nuts, wire clamp and fuel level sensor unit from the fuel tank.

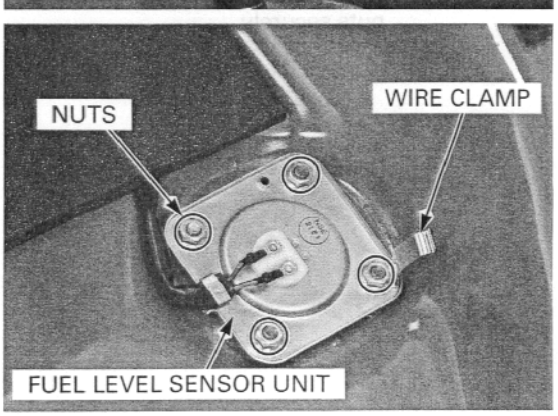

FUEL LEVEL SENSOR INSPECTION

Connect the ohmmeter to the fuel level sensor Gray/black and Green/black terminals.
Inspect the resistance of the float at the top and bottom positions.

	FULL	EMPTY
Resistance	1 – 5 kΩ	92 – 96 kΩ

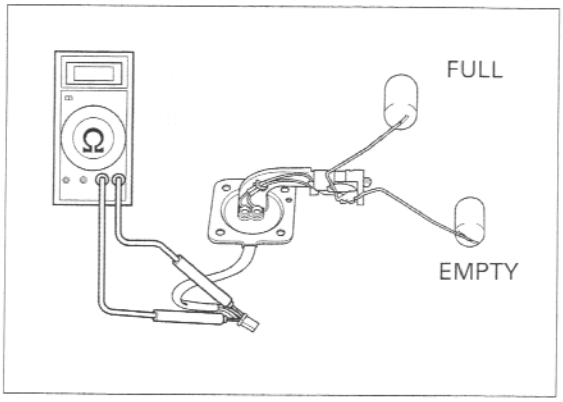

FUEL METER INSPECTION

Connect the fuel sensor 2P (Blue) connector to the wire harness and move the float from empty to full to check the fuel meter display indication.

Turn the ignition switch to "ON".
If the fuel meter does not indicate properly, check for open or short circuit in wire harness.
If the wire harness is good, replace the LCD unit with a new one (page 20-8).

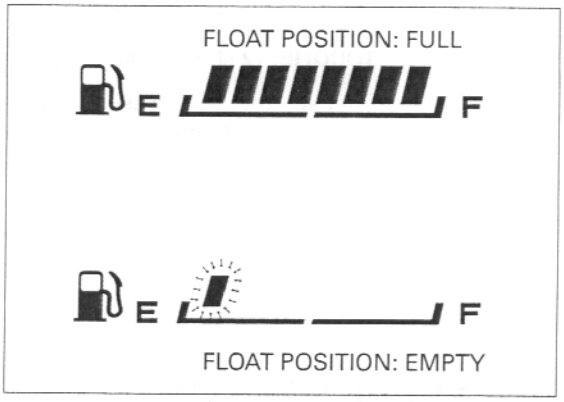

INSTALLATION

Check that the O-ring is in good condition and replace if necessary.

Be careful not to damage the float arm.

Install the fuel unit into the fuel tank.

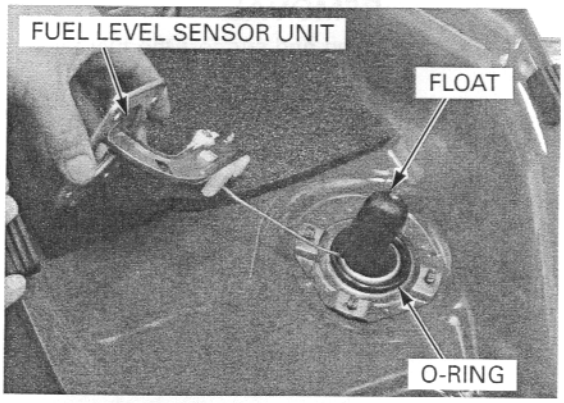

Install the wire clamp and nuts, then tighten the nuts securely

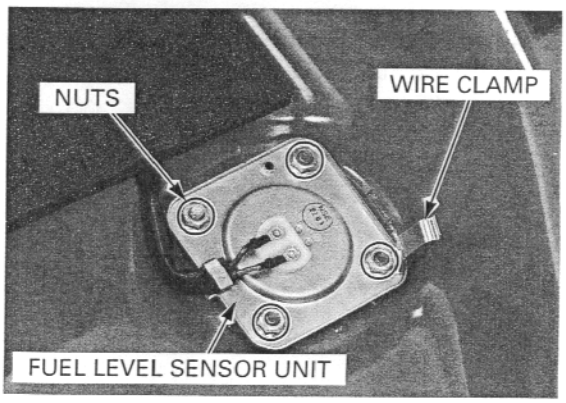

Install the fuel tank (page 8-49).

Connect the fuel level sensor unit 2P (Blue) connector.

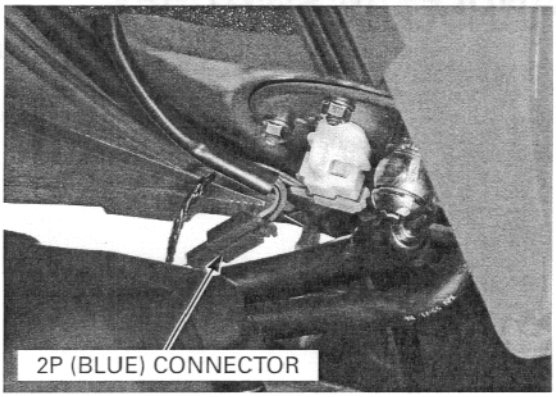

IGNITION SWITCH

INSPECTION

Remove the upper cowl (page 2-12).

Disconnect the ignition switch wire 4P (Natural) connectors.

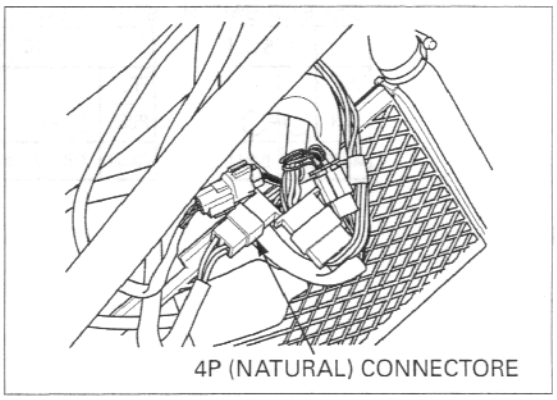

Check for continuity between the wire terminals of the ignition switch connector in each switch position.
Continuity should exist between the color coded wires as follows:

IGNITION SWITCH

	FAN	ON	BAT1	KEY
ON	○—○—○			KEY ON
OFF				KEY OFF
LOCK				KEY OFF (LOCK PIN)
COLOR	Bu/O	R/Bl	R	

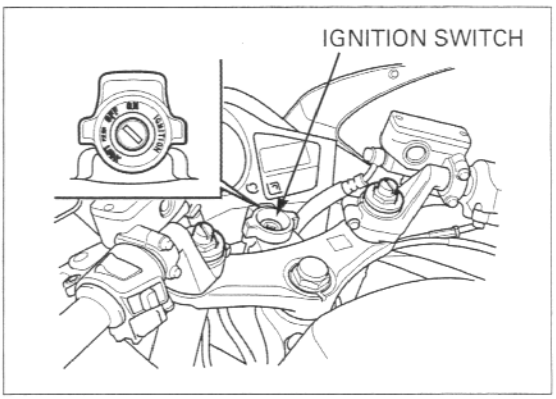

REMOVAL/INSTALLATION

Remove the top bridge (page 13-18).

Remove the bolts and ignition switch.

Install the ignition switch in the reverse order of removal.
Tighten the ignition switch mounting bolt to the specified torque.

TORQUE: 26 N·m (2.7 kgf·m, 20 lbf·ft)

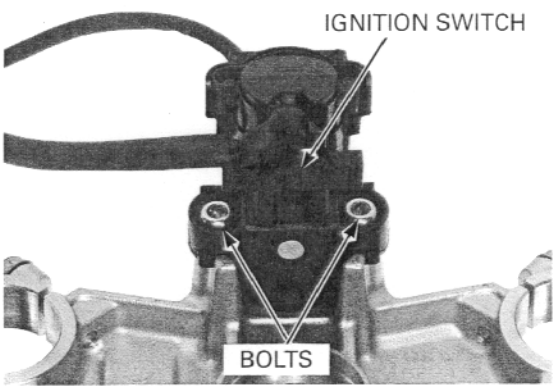

HANDLEBAR SWITCHES

Disconnect the handlebar switch 9P (Red), 9P (Black) and 4P (Red) connectors.

Check for continuity between the wire terminals of the handlebar switch connector.
Continuity should exist between the color coded wire terminals as follows:

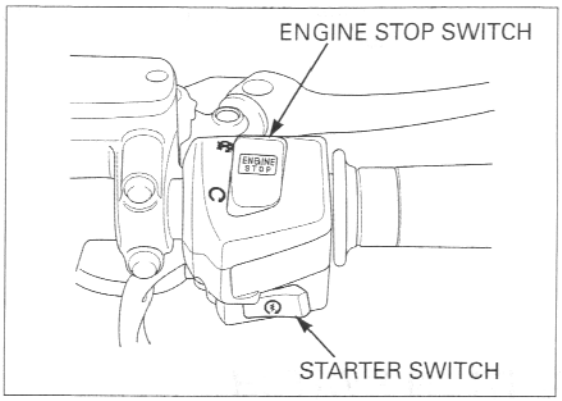

ENGINE STOP/STARTER SWITCHES

ENGINE STOP SWITCH

	IG	BAT
OFF		
RUN	○—○	
COLOR	Bl	W/Bl

STARTER SWITCH

	ST	IG	BAT	HL
FREE			○—○	
PUSH	○—○			
COLOR	Y/R	Bl	Br/Bu	Bu/W

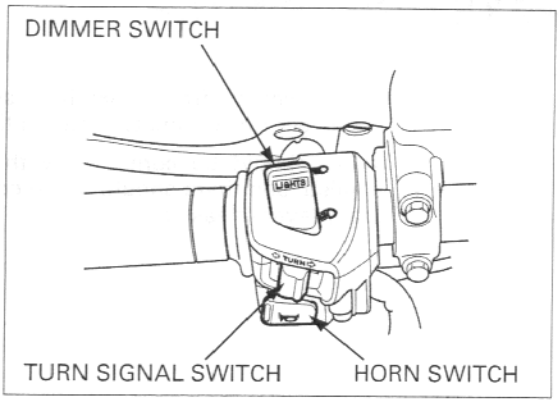

TURN SIGNAL/PASSING/DIMMER/HORN SWITCHES

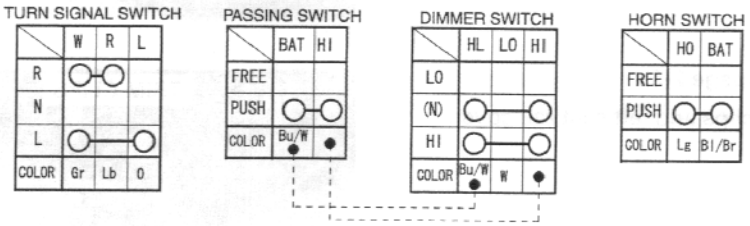

BRAKE LIGHT SWITCH

FRONT

Disconnect the front brake light switch connectors and check for continuity between the terminals.

There should be continuity with the brake lever applied, and there should be no continuity with the brake lever released.

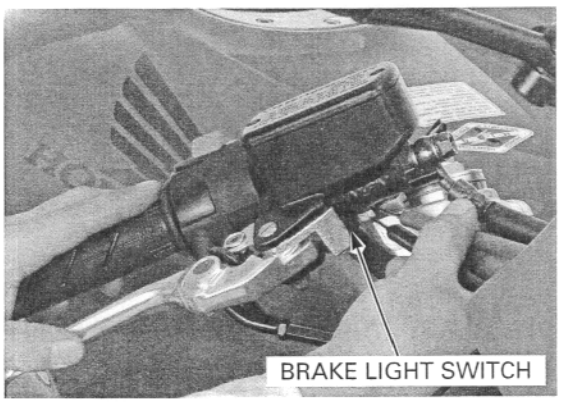

REAR

Remove the seat (page 2-5).

Remove the trim clips and left seat rail cover.

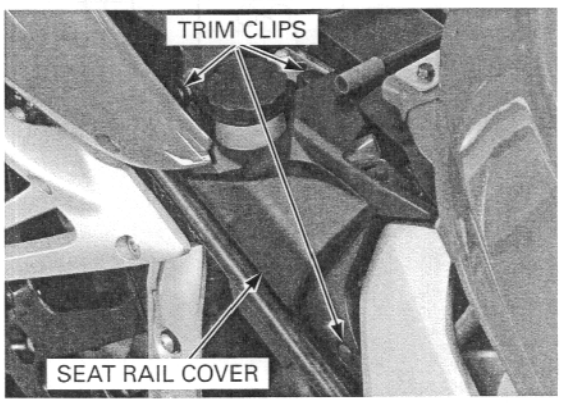

Disconnect the rear brake light switch 2P (Natural) connector and check for continuity between the terminals.

There should be continuity with the brake pedal applied, and there should be no continuity with the brake pedal released.

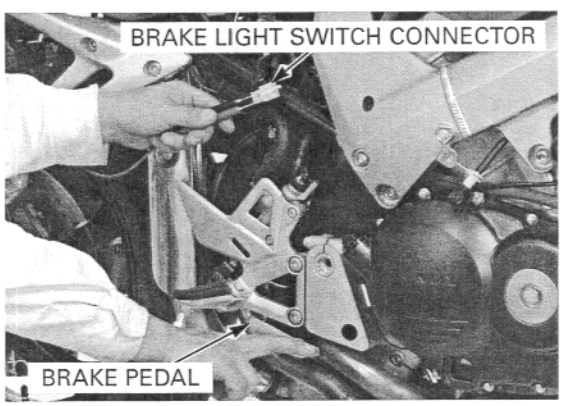

CLUTCH SWITCH

Disconnect the clutch switch connectors.

There should be continuity with the clutch lever applied, and there should be no continuity with the clutch lever released.

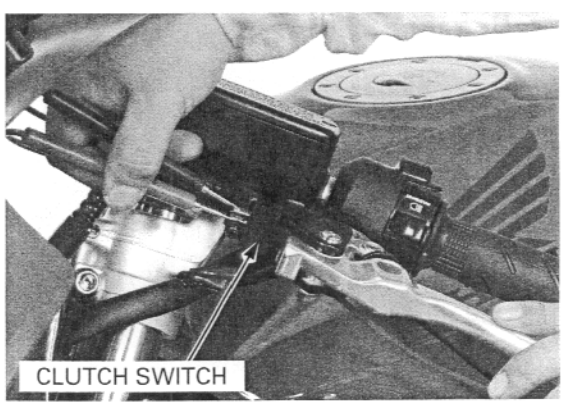

NEUTRAL SWITCH

Disconnect the neutral switch connector from the switch.

Shift the transmission into neutral and check for continuity between the Light green wire terminal and ground.

There should be continuity with the transmission in neutral, and no continuity when the transmission is in gear.

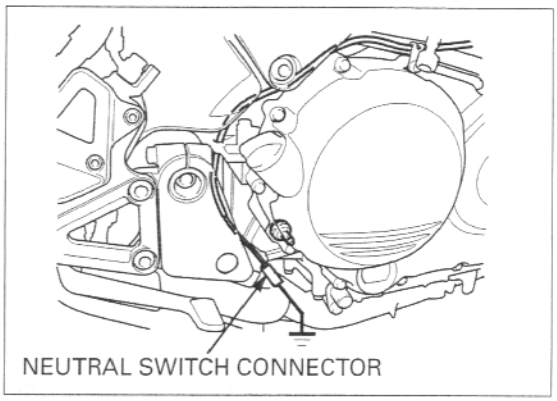

SIDE STAND SWITCH

INSPECTION

Open and support the front end of fuel tank (page 3-5).

Disconnect the side stand switch 2P (Green) connector.

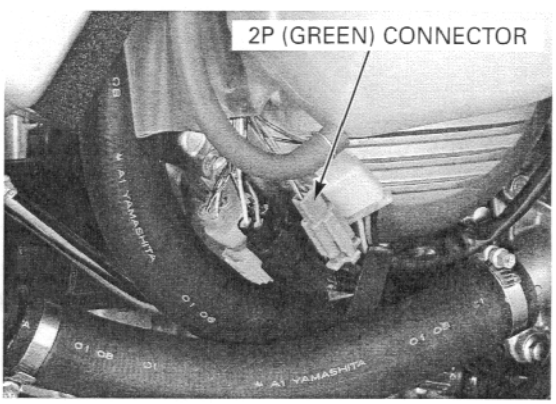

Check for continuity between the wire terminals of the side stand switch connector.
Continuity should exist only when the side stand is up.

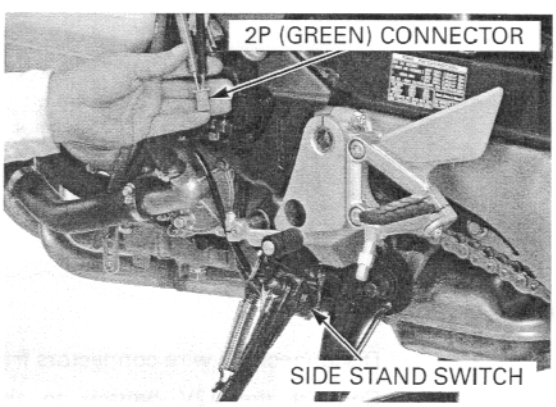

REMOVAL

Disconnect the side stand switch 2P (Green) connector.

Remove the bolt and side stand switch.

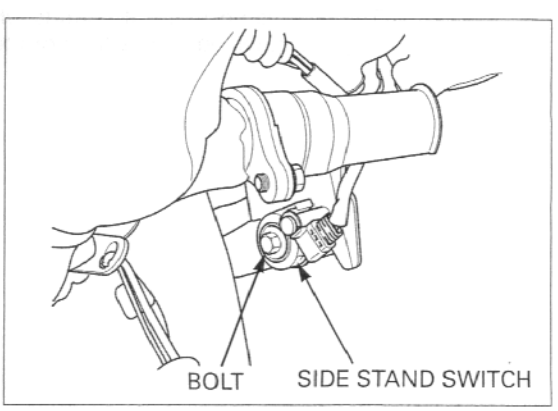

INSTALLATION

Install the side stand switch by aligning the switch pin with the side stand hole and the switch groove with the return spring holding pin.

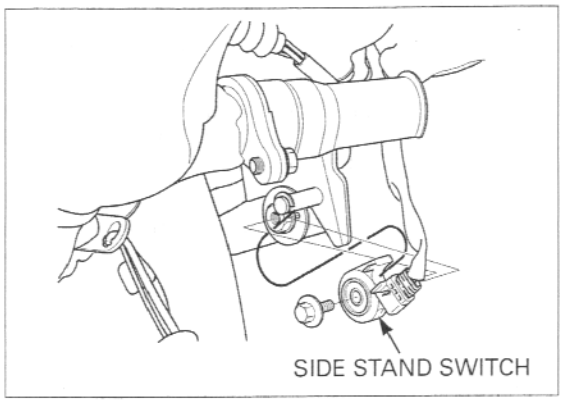

Secure the side stand switch with a new bolt.

TORQUE: 10 N·m (1.0 kgf·m, 7 lbf·ft)

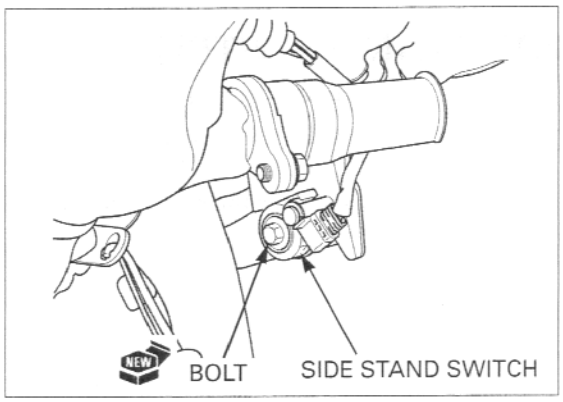

Connect the side stand switch 2P (Green) connector.

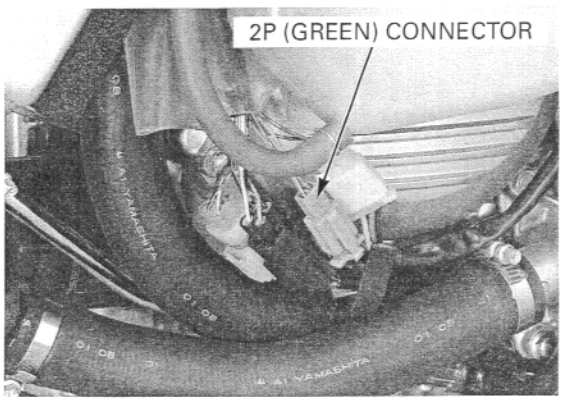

HORN

Disconnect the wire connectors from the horn.

Connect the 12V battery to the horn terminal directly.
The horn is normal if it sounds when the 12 V battery is connected across the horn terminals.

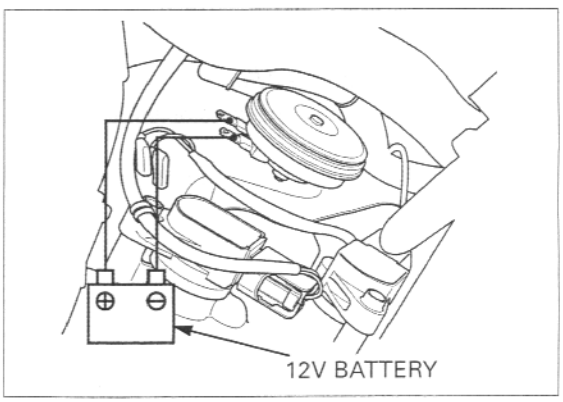

HEADLIGHT RELAY

Remove the upper cowl (page 2-12).

Disconnect the headlight relay 4P connector, then remove the headlight relay.

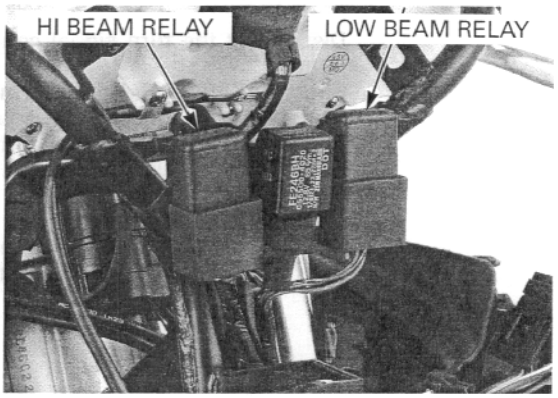

Connect the ohmmeter to the headlight relay connector terminals.

CONNECTION:

Hi beam relay:	**Blue/black – Black/red**
Low beam relay:	**White/black - Black/red**

Connect the 12 V battery to the following headlight relay connector terminals.

CONNECTION:

Hi beam relay:	**Blue – Green**
Low beam relay:	**Blue/white – Green**

There should be no continuity only when the 12 V battery is connected.
If the continuity is exist when the 12 V battery is connected, replace the headlight relay.

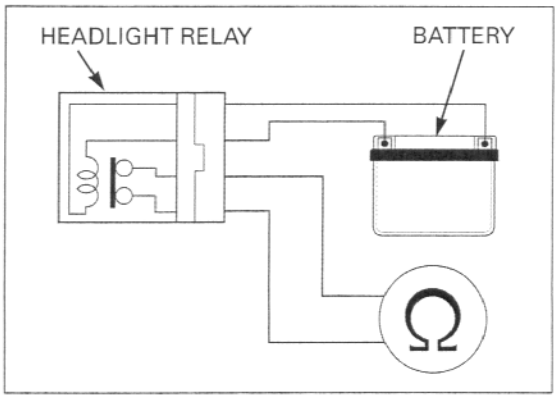

TURN SIGNAL RELAY

INSPECTION

1. **Recommended Inspection**

   Check the following
   - Battery condition
   - Burned out bulb or non-specified wattage
   - Burned fuse
   - Ignition switch and turn signal switch function
   - Loose connector

   Check for the above items.

   Are the above items in good condition?

   NO – Replace or repair the faulty part(s)

   YES – GO TO STEP 2.

2. **Turn Signal Circuit Inspection**

Remove the upper cowl (page 2-12).

Disconnect the turn signal connectors from the relay.
Short the black and gray terminals of the turn signal relay connector with a jumper wire. Start the engine and check the turn signal light by turning the switch "ON".

Is the light come on?

YES – • Faulty turn signal relay
• Poor connection of the connector.

NO – Broken wire harness

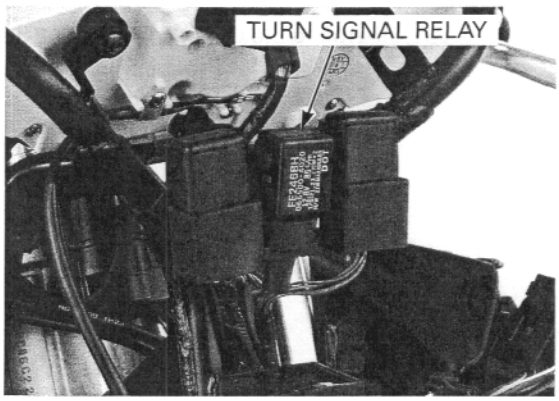

21. WIRING DIAGRAMS

STANDARD type: 21-3

ABS type: (except U.S.A. type) 21-4

STANDARD type:

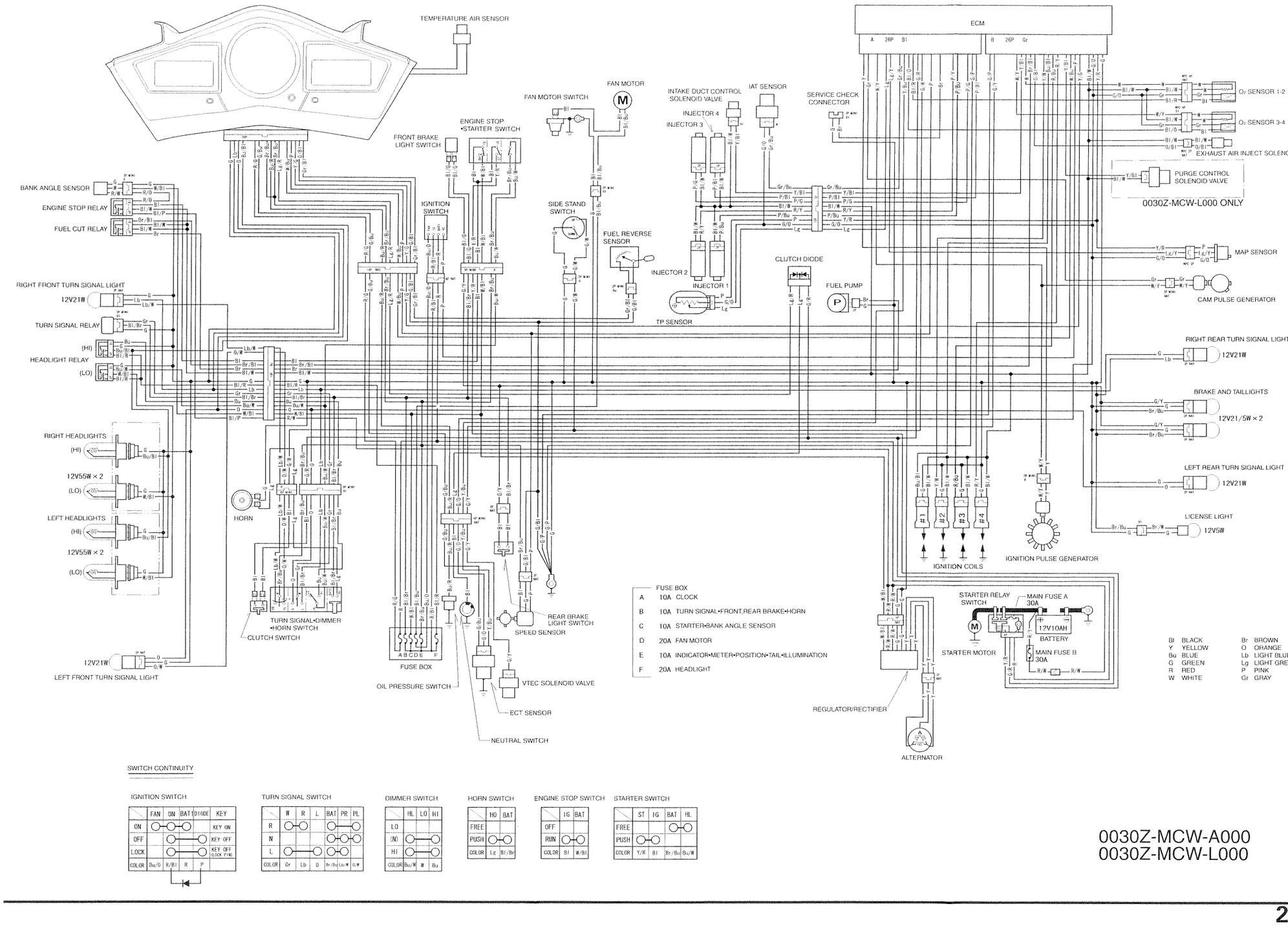

SWITCH CONTINUITY

IGNITION SWITCH

	FAN	ON	BAT	DIODE	KEY
ON		○	○		KEY ON
OFF			○		KEY OFF
LOCK			○		KEY OFF (LOCK PIN)
COLOR	Bu/O	R/Bl	R	P	

TURN SIGNAL SWITCH

	W	R	L	BAT	PR	PL
R	○	○		○	○	
N				○	○	
L			○	○		○
COLOR	Gr	Lb	O	Br/Bu	Lb/W	O/W

DIMMER SWITCH

	HL	LO	HI
LO		○	
(N)			
HI	○		○
COLOR	Bu/W	W	Bu

HORN SWITCH

	HO	BAT
FREE		
PUSH	○	○
COLOR	Lg	Bl/Br

ENGINE STOP SWITCH

	IG	BAT
OFF		
RUN	○	○
COLOR	Bl	W/Bl

STARTER SWITCH

	ST	IG	BAT	HL
FREE			○	
PUSH	○	○		
COLOR	Y/R	Bl	Br/Bu	Bu/W

0030Z-MCW-A000
0030Z-MCW-L000

22. TECHNICAL FEATURE

H-VTEC SYSTEM 22-2

H-VTEC SYSTEM

OUTLINE

This motorcycle is equipped with the H-VTEC system.
At engine speeds below 6,800 rpm only the two non-VTEC valves in each cylinder operate (the VTEC valves do not operate). At these low and mid speeds, the engine operates as a two-valve per cylinder engine.
Above 6,800 rpm all four valves in each cylinder operate, and the engine operates as a four-valve per cylinder engine.

This VTEC system allows for improved engine performance and fuel economy, as well as reducing engine noise and harmful exhaust emissions.

2 VALVE OPERATION (SPOOL VALVE OFF):

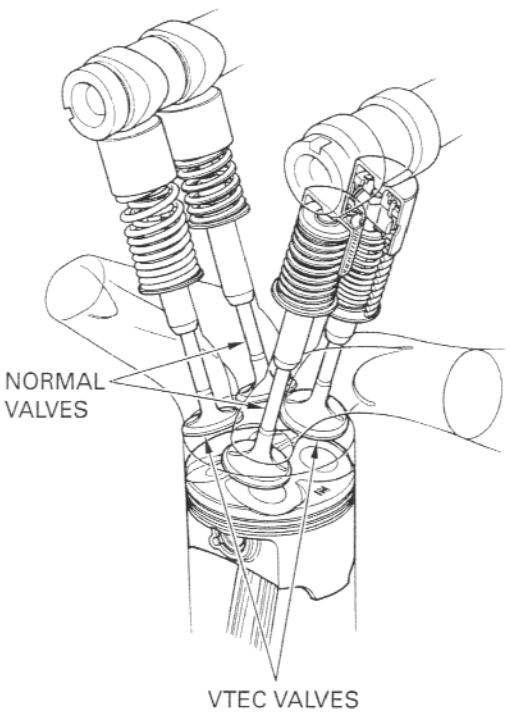

4 VALVE OPERATION (SPOOL VALVE ON):

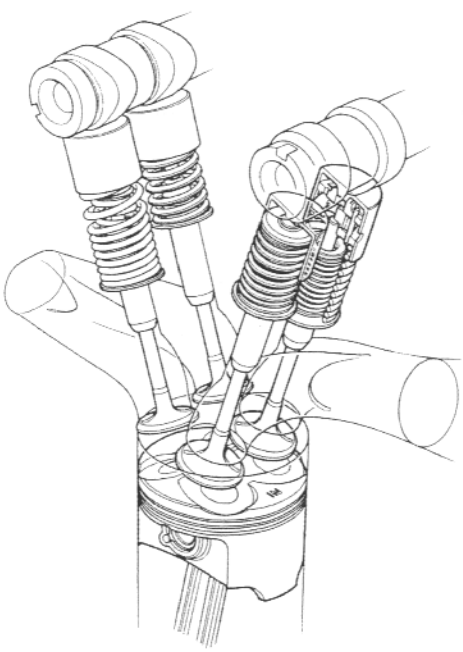

SPOOL VALVE OPERATION

The spool valve (solenoid valve) is placed in the engine V-bank, and it charges the oil passage from the oil pump to the VTEC valve lifters.

When the spool valve is off, oil pressure from the main gallery is returned in the crankcase and the oil pressure has no effect to the valve lifters.
When the spool valve is on, oil pressure reaches the valve lifter through the oil passage.

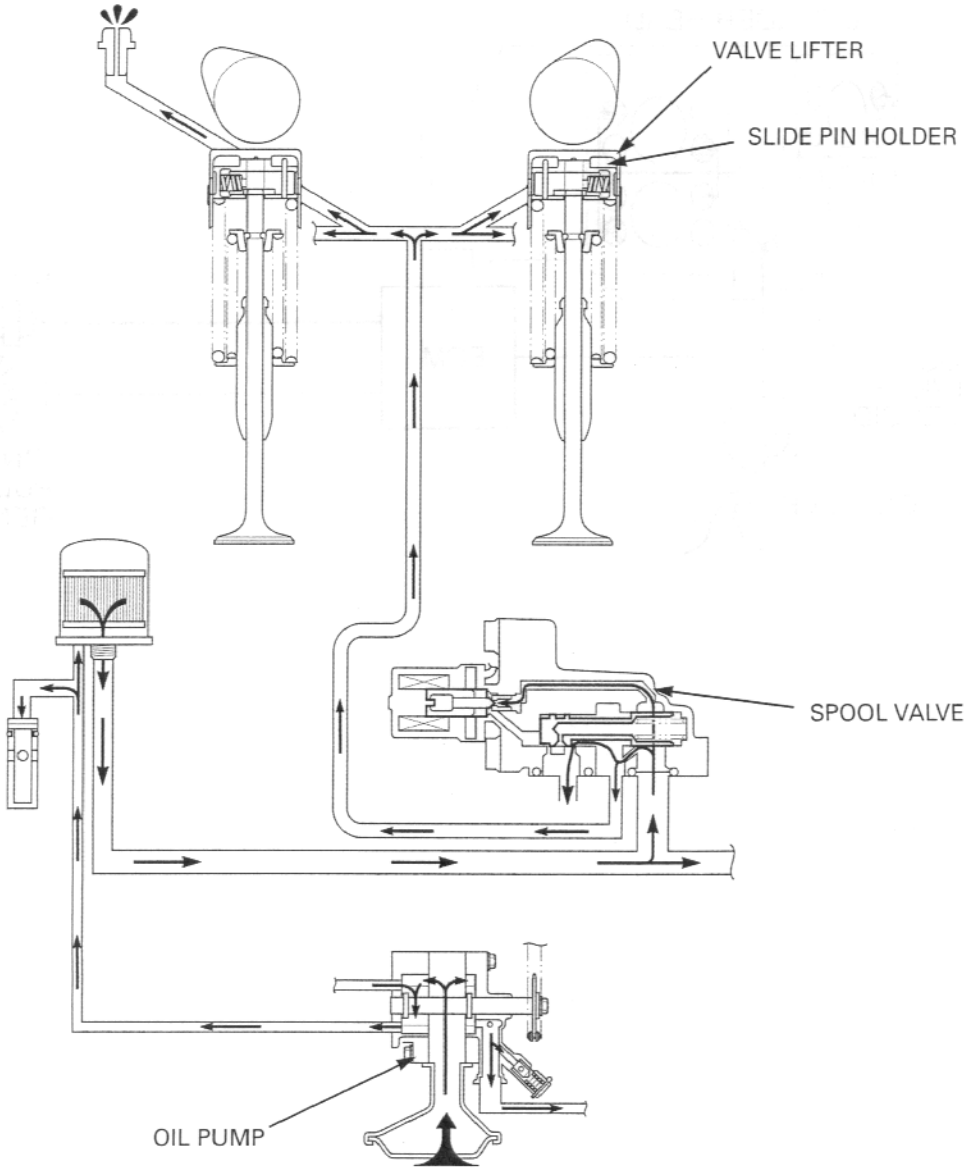

The spool valve solenoid is operated by the ECM.
The ECM detects the side stand switch, coolant temperature, and ignition pulse generator signals, and sends the signal to the solenoid valve.

Operating condition from 2 valve to 4 valve

- Engine coolant temperature is over 65 °C/149 °F.
- Engine revolution 6,800 rpm.

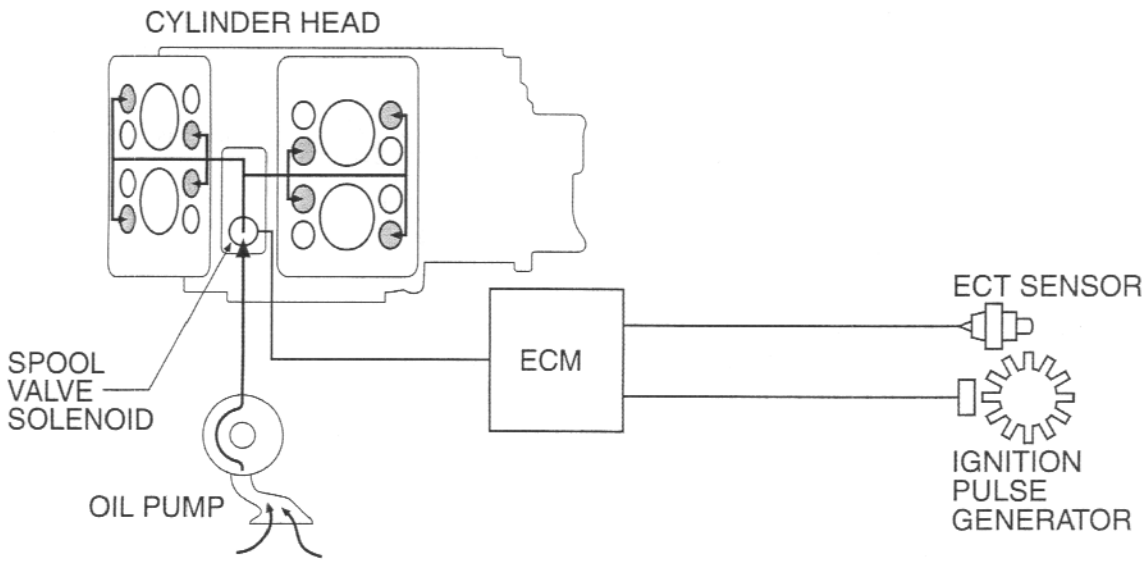

SLIDE PIN OPERATION

In the valves that are part of the H-VTEC system, the slide pin holder is installed in the valve lifter, between the valve lifter and valve stem tip. The slide pin holder is positioned where the typical valve shim is usually located.
The slide pin holder consists of the slide pin, return spring, and stopper pin.
When the spool valve (located in the engine V-bank) turns off, the camshafts affect only the valve lifters, slide pin holders and outer valve springs, making the H-VTEC intake and exhaust valves non-operational.
When the spool valve turns on, the slide pin within the slide pin holder is pushed toward the valve stem by oil pressure. The camshaft motion is then transferred to the valves and the H-VTEC valves operate.

Spool valve off

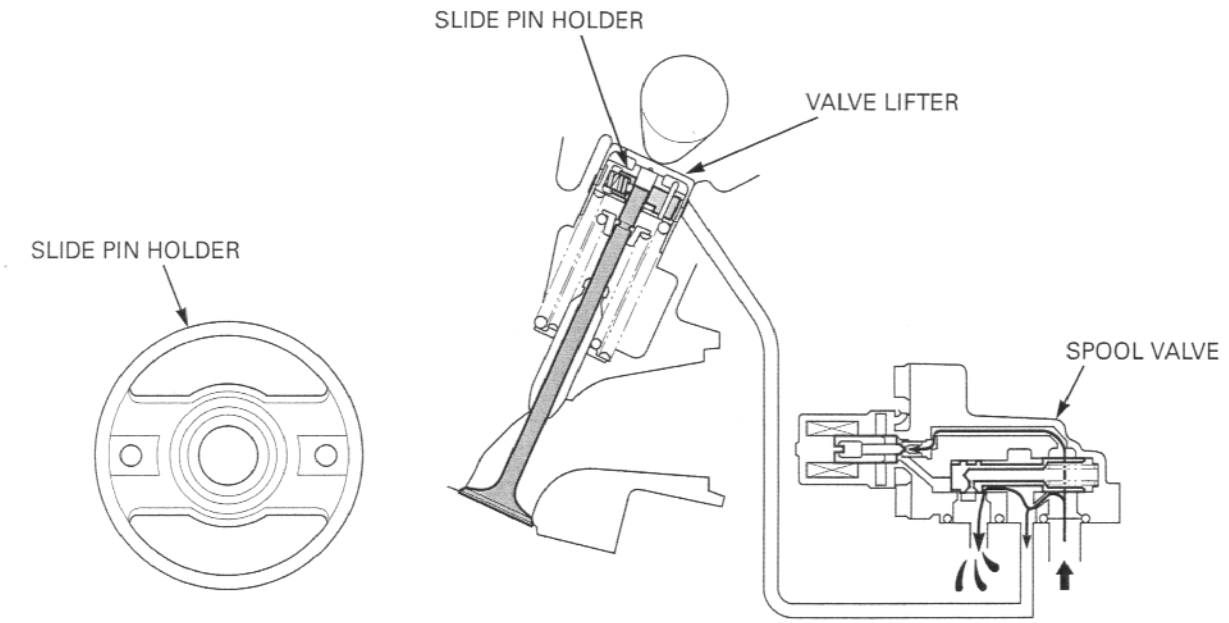

Spool valve on

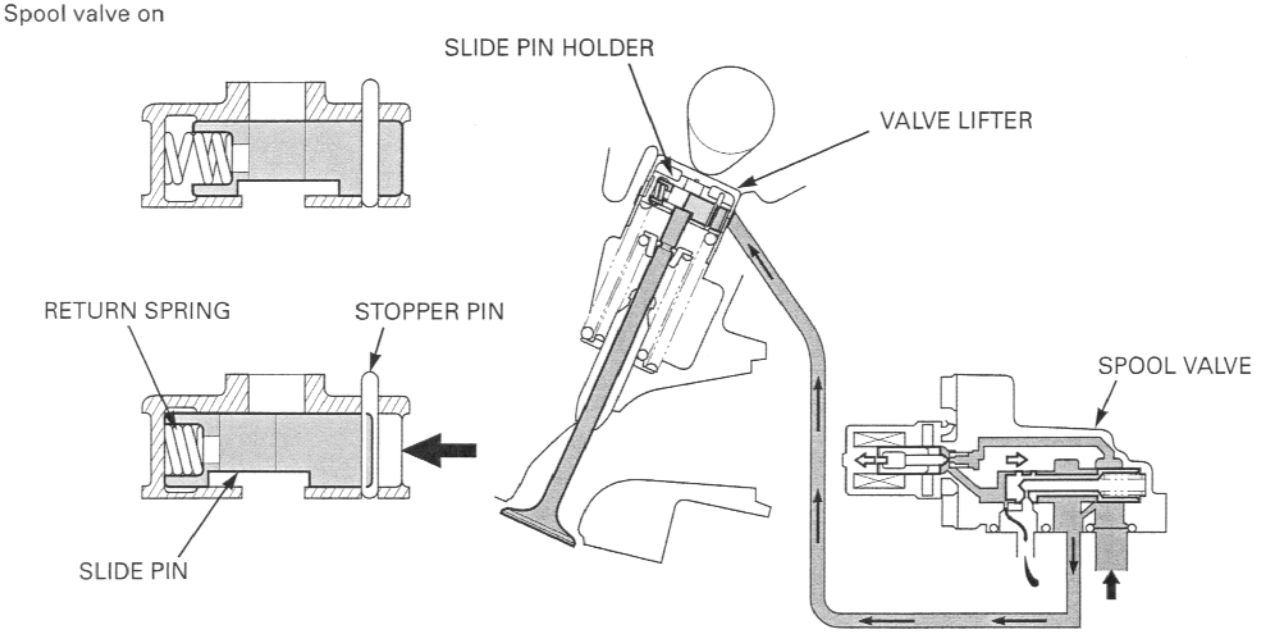

MEMO

23. TROUBLESHOOTING

ENGINE DOES NOT START OR IS HARD TO START 23-2

ENGINE LACKS POWER 23-2

POOR PERFORMANCE AT LOW AND IDLE SPEED 23-4

POOR PERFORMANCE AT HIGH SPEED 23-5

POOR HANDLING 23-6

ENGINE DOES NOT START OR IS HARD TO START

1. **Spark Plug Inspection**

   Remove and inspect spark plug.

   Are the spark plugs in good condition?

   NO – • Incorrect spark plug heat range
   • Incorrect spark plug gap
   • Dirty air cleaner

   YES – GO TO STEP 2.

2. **Spark Test**

   Perform spark test.

   Is the spark quality good?

   NO – • Faulty spark plug
   • Loose or disconnected ignition system wires
   • Faulty direct ignition coil
   • Faulty ignition pulse generator
   • Faulty engine stop switch
   • Faulty engine control module (ECM)

   YES – GO TO STEP 3.

3. **Programmed Fuel Injection System Inspection**

   Check the fuel injection system.

   Is the fuel injection system normal?

   NO – Faulty fuel injection system (page 5-68).

   YES – GO TO STEP 4.

4. **Cylinder compression Inspection**

   Test the cylinder compression.

   Is the compression as specified?

   NO – • Valve stuck open
   • Worn cylinder and piston rings
   • Damaged cylinder head gasket
   • Seized valve
   • Improper valve timing

   YES – GO TO STEP 5.

5. **Engine Start Condition**

   Start by following the normal procedure.

   Does the engine start but stops?

   Yes – • Leaking insulator
   • Faulty starter valve
   • Improper ignition timing (Faulty ECM or ignition pulse generator)
   • Contaminated fuel

ENGINE LACKS POWER

1. **Drive Train Inspection**

   Raise wheel off the ground and spin by hand.

   Does the wheel spin freely?

   NO – • Brake dragging
   • Worn or damaged wheel bearings
   • Drive chain adjustment too tight
   • Wheel installed improperly

   YES – GO TO STEP 2.

2. **Tire Pressure Inspection**

   Check the tire pressure.

   Are the tire pressures correct?

   NO – • Faulty tire valve
   • Punctured tire

   YES – GO TO STEP 3.

3. **Clutch Inspection**

   Accelerate rapidly low to second.

   Does the engine speed change accordingly when clutch is released?

   NO – • Clutch slipping
   • Worn clutch discs/plates
   • Warped clutch discs/plates
   • Weak clutch spring
   • Faulty hydraulic assist system
   • Additive in engine oil

   YES – GO TO STEP 4.

4. **Engine Performance Inspection**

   Accelerate lightly.

   Does the engine speed increase?

   NO – • Clogged air cleaner
   • Restricted fuel flow
   • Clogged muffler

   YES – GO TO STEP 5.

5. **Spark Plug Inspection**

   Remove and inspect spark plug.

   Are the spark plugs in good condition?

   NO – • Plugs not serviced frequently enough
   • Incorrect spark plug heat range
   • Incorrect spark plug gap

   YES – GO TO STEP 6.

6. **Engine Oil Inspection**

   Check the oil level and condition.

   Is the engine oil in good condition?

   NO – • Oil level too high
   • Oil level too low
   • Contaminated oil

   YES – GO TO STEP 7.

7. **Ignition Timing Inspection**

   Check the ignition timing.

   Is the ignition timing as specified?

   NO – • Faulty engine control module (ECM)
   • Faulty ignition pulse generator
   • Improper valve timing

   YES – GO TO STEP 8.

8. **Cylinder compression Inspection**

   Test the cylinder compression.

   Is the compression as specified?

   NO – • Valve clearance too small
   • Worn cylinder and piston rings
   • Damaged cylinder head gasket
   • Improper valve timing

   YES – GO TO STEP 9.

9. **Programmed Fuel Injection System Inspection**

   Check the fuel injection system.

   Is the fuel injection system normal?

   NO – Faulty fuel injection system (page 5-68).

   YES – GO TO STEP 10.

10. **lubrication Inspection**

    Remove cylinder head cover and inspect lubrication.

    Is the valve train lubricated properly?

    NO – • Oil level too low
    • Faulty oil pump drive mechanism
    • Faulty oil pump

    YES – GO TO STEP 11.

11. **Over Heating Inspection**

    Check for engine over heating.

    Is the engine overheating?

    YES – • Coolant level too low
    • Fan motor not working (Faulty fan motor switch)
    • Thermostat stuck closed
    • Excessive carbon build-up in combustion chamber
    • Use of poor quality fuel
    • Clutch slipping

    NO – GO TO STEP 12.

12. **Engine Knocking Inspection**

    Accelerate or run at high speed.

    Is the engine knocking?

    YES – • Worn piston and cylinder
    • Wrong type of fuel
    • Thermostat stuck closed
    • Excessive carbon build-up in combustion chamber
    • Ignition timing too advance (Faulty ECM)

    NO – • Engine does not knock

POOR PERFORMANCE AT IDLE AND LOW SPEED

1. **Spark Plug Inspection**

   Remove and inspect spark plug.

   Are the spark plugs in good condition?

   NO – • Plugs not serviced frequently enough
   • Incorrect spark plug heat range
   • Incorrect spark plug gap

   YES – GO TO STEP 2.

2. **Ignition Timing Inspection**

   Check the ignition timing.

   Is the ignition timing as specified?

   NO – • Faulty engine control module (ECM)
   • Faulty ignition pulse generator
   • Improper valve timing

   YES – GO TO STEP 3.

3. **Programmed Fuel Injection System Inspection**

   Check the fuel injection system.

   Is the fuel injection system normal?

   NO – Faulty fuel injection system (page 5-68).

   YES – GO TO STEP 4.

4. **Starter Valve Synchronization Inspection**

   Check the starter valve synchronization.

   Is the starter valve synchronization as specified?

   NO – Adjust the starter valve synchronization (page 5-75).

   YES – GO TO STEP 5.

5. **Intake Pipe Leaking Inspection**

   Check for leaks intake manifold pipe.

   Are there leaks?

   YES – • Loose insulator
   • Damaged insulator

POOR PERFORMANCE AT HIGH SPEED

1. **Ignition Timing Inspection**

   Check the ignition timing.

   Is the ignition timing as specified?

   NO – • Faulty engine control module (ECM)
   • Faulty ignition pulse generator
   • Improper valve timing

   YES – GO TO STEP 2.

2. **Programmed Fuel Injection System Inspection**

   Check the fuel injection system.

   Is the fuel injection system normal?

   NO – Faulty fuel injection system (page 5-68).

   YES – GO TO STEP 3.

3. **Valve Timing Inspection**

   Check the valve timing.

   Is the valve timing correct?

   NO – Camshafts not installed properly

   YES – GO TO STEP 4.

4. **Valve Spring Inspection**

   Check the valve springs.

   Is the valve spring free length as specified?

   NO – Faulty valve spring

   YES – Not weak

POOR HANDLING

Steering is heavy
- Steering bearing adjustment nut too tight
- Damaged steering head bearings

Either wheel is wobbling
- Excessive wheel bearing play
- Bent rim
- Improper installed wheel hub
- Swingarm pivot bearing excessively worn
- Bent frame

The motorcycle pulls to one side
- Bent fork
- Bent swingarm
- Bent axle
- Bent frame

24. INDEX

ABS CONTROL UNIT 16-37
ABS MODULATOR 16-32
AIR CLEANER 3-6
AIR CLEANER HOUSING 5-60
ALTERNATOR CHARGING COIL 17-9
ALTERNATOR COVER INSTALLATION 17-12
ALTERNATOR COVER REMOVAL 17-10
BANK ANGLE SENSOR 5-82
BATTERY 17-6
BATTERY/CHARGING SYSTEM SPECIFICATIONS 1-10
BEARING HOLDER 14-10
BEFORE STARTING TROUBLESHOOTING 16-4
BEFORE TROUBLESHOOTING 16-7
BODY PANEL LOCATIONS 2-2
BRAKE FLUID 3-25
BRAKE FLUID REPLACEMENT/AIR BLEEDING 15-7
BRAKE LIGHT SWITCH
  LIGHTS/METERS/SWITCHES 20-24
  MAINTENANCE 3-28
BRAKE PAD WEAR 3-26
BRAKE PAD/DISC 15-17
BRAKE PEDAL 15-46
BRAKE SYSTEM 3-27
CABLE & HARNESS ROUTING 1-25
CAM CHAIN TENSIONER LIFTER 8-53
CAM LOBE HEIGHT 8-18
CAM PULSE GENERATOR 5-79
CAMSHAFT INSPECTION 8-17
CAMSHAFT OIL CLEARANCE 8-18
CAMSHAFT RUNOUT 8-17
CHARGING SYSTEM INSPECTION 17-8
CLUTCH 9-15
CLUTCH FLUID 3-30
CLUTCH FLUID REPLACEMENT/AIR BLEEDING 9-6
CLUTCH MASTER CYLINDER 9-7
CLUTCH SLAVE CYLINDER 9-11
CLUTCH SPECIFICATIONS 1-7
CLUTCH SWITCH 20-24
CLUTCH SYSTEM 3-29
COMBINATION METER 20-8
COMPONENT LOCATION
  CLUTCH 9-2
  CRANKCASE/TRANSMISSION 11-2
  CRANKSHAFT/PISTON/CYLINDER 12-2
  CYLINDER HEAD/VALVES 8-2
  ENGINE REMOVAL/INSTALLATION 7-2
  FRONT WHEEL/SUSPENSION/STEERING 13-2
  FUEL SYSTEM (Programmed Fuel Injection) 5-2
  GEARSHIFT LINKAGE 10-2
  HYDRAULIC BRAKE 15-2
  REAR WHEEL SUSPENSION 14-2
COOLANT REPLACEMENT 6-6
COOLANT TEMPERATURE GAUGE/SENSOR 20-15
COOLING FAN MOTOR SWITCH 20-17
COOLING SYSTEM 3-17
COOLING SYSTEM SPECIFICATIONS 1-6
CRANKCASE ASSEMBLY 11-13
CRANKCASE SEPARATION 11-5
CRANKCASE/TRANSMISSION SPECIFICATIONS 1-8
CRANKPIN BEARING 12-9
CRANKSHAFT 12-4
CRANKSHAFT/PISTON/CYLINDER SPECIFICATIONS 1-8
CYLINDER COMPRESSION TEST 8-6
CYLINDER HEAD ASSEMBLY 8-29
CYLINDER HEAD COVER ASSEMBLY 8-48
CYLINDER HEAD COVER DISASSEMBLY 8-10
CYLINDER HEAD COVER INSTALLATION 8-49
CYLINDER HEAD COVER REMOVAL 8-6
CYLINDER HEAD DISASSEMBLY 8-21
CYLINDER HEAD INSPECTION 8-23
CYLINDER HEAD INSTALLATION 8-34
CYLINDER HEAD REMOVAL 8-19
CYLINDER HEAD/VALVES SPECIFICATIONS 1-7
DIODE 19-18
DRIVE CHAIN 3-19
DRIVE SPROCKET INSTALLATION 10-10
DRIVE SPROCKET REMOVAL 10-4
DRIVEN FLANGE 14-13
ECM (ENGINE CONTROL MODULE) 5-83
ECT SENSOR 5-78
ELECTRIC STARTER/STARTER CLUTCH
SPECIFICATIONS 1-11
EMISSION CONTROL INFORMATION LABELS
(U.S.A. ONLY) 1-45
EMISSION CONTROL SYSTEMS 1-42
ENGINE & FRAME TORQUE VALUES 1-12
ENGINE DOES NOT START OR IS HARD TO START 23-2
ENGINE IDLE SPEED 3-17
ENGINE INSTALLATION 7-10
ENGINE LACKS POWER 23-2
ENGINE OIL/OIL FILTER 3-14
ENGINE REMOVAL 7-5
ENGINE STOP RELAY 5-83
EVAP PURGE CONTROL SOLENOID VALVE
(CALIFORNIA TYPE ONLY) 5-88
EVAPORATIVE EMISSION CONTROL SYSTEM
(CALIFORNIA TYPE ONLY) 3-19
FAST IDLE WAX UNIT 5-71
FLYWHEEL 17-11
FORK 13-18
FRONT BRAKE CALIPER 15-35
FRONT CAMSHAFT INSTALLATION 8-37
FRONT CAMSHAFT REMOVAL 8-11
FRONT FENDER 2-17
FRONT MASTER CYLINDER 15-20
FRONT WHEEL 13-11
FRONT WHEEL/SUSPENSION/STEERING
SPECIFICATIONS 1-9
FUEL CUT-OFF RELAY 5-56
FUEL LEVEL SENSOR 20-19
FUEL LINE 3-5
FUEL LINE INSPECTION 5-51
FUEL PUMP 5-54
FUEL SYSTEM (Programmed Fuel Injection)
SPECIFICATIONS 1-6
FUEL TANK 5-56
GEARSHIFT LINKAGE 10-5
GENERAL SPECIFICATIONS 1-4
HANDLEBAR SWITCHES 20-22
HANDLEBARS 13-5
HEADLIGHT 20-5
HEADLIGHT AIM 3-29
HEADLIGHT RELAY 20-27
HORN 20-26
H-VTEC 22-2
HYDRAULIC BRAKE SPECIFICATIONS 1-10
IAT SENSOR 5-78
IGNITION PULSE GENERATOR 18-7
IGNITION SWITCH 20-21
IGNITION SYSTEM INSPECTION 18-5
IGNITION SYSTEM SPECIFICATIONS 1-10
IGNITION TIMING 18-7
INJECTOR 5-68
LICENSE LIGHT 20-8
LIGHTS/METERS/SWITCHES SPECIFICATIONS 1-11
LUBRICATION & SEAL POINTS 1-21
LUBRICATION SYSTEM DIAGRAM 4-2
LUBRICATION SYSTEM SPECIFICATIONS 1-6

MAIN JOURNAL BEARING 12-6
MAINTENANCE SCHEDULE 3-4
MAP SENSOR 5-77
MODEL IDENTIFICATION 1-2
MUFFLER/EXHAUST PIPE 2-28
NEUTRAL SWITCH 20-25
NUTS, BOLTS, FASTENERS 3-33
O2 SENSOR 5-90
OIL COOLER 4-14
OIL PRESSURE INSPECTION 4-5
OIL PRESSURE SWITCH 20-18
OIL PUMP 4-8
OIL STRAINER/PRESSURE RELIEF VALVE 4-6
OPEN AIR TEMPERATURE SENSOR 20-11
PAIR SOLENOID VALVE 5-87
PGM-FI (Programmed Fuel Injection) SYSTEM 5-7
PGM-FI SELF-DIAGNOSIS MALFUNCTION INDICATOR LAMP (MIL) FAILURE CODES 5-11
PGM-FI TROUBLESHOOTING 5-14
PISTON/CYLINDER 12-11
POOR HANDLING 23-6
POOR PERFORMANCE AT HIGH SPEED 23-5
POOR PERFORMANCE AT LOW AND IDLE SPEED 23-4
PRESSURE REGULATOR 5-70
PRIMARY DRIVE GEAR 9-23
PROPORTIONAL CONTROL VALVE 15-33
RADIATOR 6-13
RADIATOR COOLANT 3-17
RADIATOR RESERVE TANK 6-17
REAR AXLE ASSEMBLY 14-18
REAR AXLE DISASSEMBLY 14-6
REAR AXLE/BRAKE DISC 14-17
REAR BRAKE CALIPER 15-41
REAR CAMSHAFT INSTALLATION 8-42
REAR CAMSHAFT REMOVAL 8-14
REAR COWL 2-5
REAR FENDER 2-17
REAR MASTER CYLINDER 15-28
REAR WHEEL 14-5
REAR WHEEL/SUSPENSION SPECIFICATIONS 1-9
REGULATOR/RECTIFIER 17-13
RIGHT CRANKCASE COVER INSTALLATION 9-25
RIGHT CRANKCASE COVER REMOVAL 9-14
SEAT 2-5
SEAT COWL INSTALLATION 2-4
SEAT RAIL 2-23
SECONDARY AIR SUPPLY SYSTEM 3-18
SECONDARY MASTER CYLINDER 15-25
SERVICE INFORMATION
- ANTI-LOCK BRAKE SYSTEM (ABS) 16-3
- BATTERY/CHARGING SYSTEM 17-3
- CLUTCH 9-4
- COOLING SYSTEM 6-3
- CRANKCASE/TRANSMISSION 11-3
- CRANKSHAFT/PISTON/CYLINDER 12-3
- CYLINDER HEAD/VALVES 8-3
- ELECTRIC STARTER/STARTER CLUTCH 19-3
- ENGINE REMOVAL/INSTALLATION 7-4
- FRAME/BODY PANELS/EXHAUST SYSTEM 2-3
- FRONT WHEEL/SUSPENSION/STEERING 13-3
- FUEL SYSTEM (Programmed Fuel Injection) 5-3
- GEARSHIFT LINKAGE 10-3
- HYDRAULIC BRAKE 15-4
- IGNITION SYSTEM 18-3
- LIGHTS/METERS/SWITCHES 20-3
- LUBRICATION SYSTEM 4-3
- MAINTENANCE 3-2
- REAR WHEEL SUSPENSION 14-3

SERVICE RULES 1-2
SHOCK ABSORBER 14-26
SIDE COWL 2-8
SIDE STAND 3-30
SIDE STAND SWITCH 20-25
SPARK PLUG 3-7
SPEEDOMETER/VEHICLE SPEED SENSOR 20-12
STANDARD TORQUE VALUES 1-12
STARTER CLUTCH 19-11
STARTER MOTOR 19-6
STARTER RELAY SWITCH 19-17
STARTER VALVE 5-72
STARTER VALVE SYNCHRONIZATION 5-75
STATOR 17-10
STEERING HEAD BEARINGS 3-34
STEERING STEM 13-30
SUSPENSION 3-31
SUSPENSION LINKAGE 14-24
SWINGARM 14-31
SYSTEM DIAGRAM
- ANTI-LOCK BRAKE SYSTEM (ABS) 16-2
- BATTERY/CHARGING SYSTEM 17-2
- ELECTRIC STARTER/STARTER CLUTCH 19-2
- FUEL SYSTEM (Programmed Fuel Injection) 5-6
- IGNITION SYSTEM 18-2

SYSTEM FLOW PATTERN 6-2
SYSTEM LOCATION
- BATTERY/CHARGING SYSTEM 17-2
- ELECTRIC STARTER/STARTER CLUTCH 19-2
- FUEL SYSTEM (Programmed Fuel Injection) 5-5
- IGNITION SYSTEM 18-2
- LIGHTS/METERS/SWITCHES 20-2

SYSTEM TESTING 6-5
TACHOMETER 20-15
TAIL/BRAKE LIGHT 20-7
THERMOSTAT 6-8
THROTTLE BODY 5-63
THROTTLE OPERATION 3-6
TOOLS 1-19
TP SENSOR 5-80
TRANSMISSION 11-6
TRIM CLIPS 2-4
TROUBLESHOOTING
- ANTI-LOCK BRAKE SYSTEM (ABS) 16-9
- BATTERY/CHARGING SYSTEM 17-5
- CLUTCH 9-5
- COOLING SYSTEM 6-4
- CRANKCASE/TRANSMISSION 11-4
- CRANKSHAFT/PISTON/CYLINDER 12-3
- CYLINDER HEAD/VALVES 8-5
- ELECTRIC STARTER/STARTER CLUTCH 19-4
- FRAME/BODY PANELS/EXHAUST SYSTEM 2-3
- FRONT WHEEL/SUSPENSION/STEERING 13-4
- FUEL SYSTEM (Programmed Fuel Injection) 5-4
- GEARSHIFT LINKAGE 10-3
- HYDRAULIC BRAKE 15-6
- IGNITION SYSTEM 18-4
- LIGHTS/METERS/SWITCHES 20-4
- LUBRICATION SYSTEM 4-4
- REAR WHEEL SUSPENSION 14-4

TURN SIGNAL 20-6
TURN SIGNAL RELAY 20-27
UPPER COWL 2-12
VALVE CLEARANCE 3-9
VALVE GUIDE REPLACEMENT 8-25
VALVE SEAT INSPECTION/REFACING 8-26
VARIABLE AIR INTAKE CONTROL VALVE 5-85
VTEC SPOOL VALVE 5-89
WATER PUMP 6-18
WHEEL SPEED SENSOR 16-31

WHEELS/TIRES 3-34
WIRING DIAGRAM (ABS type/except U.S.A.) 21-4
WIRING DIAGRAM (STANDARD type) 21-3